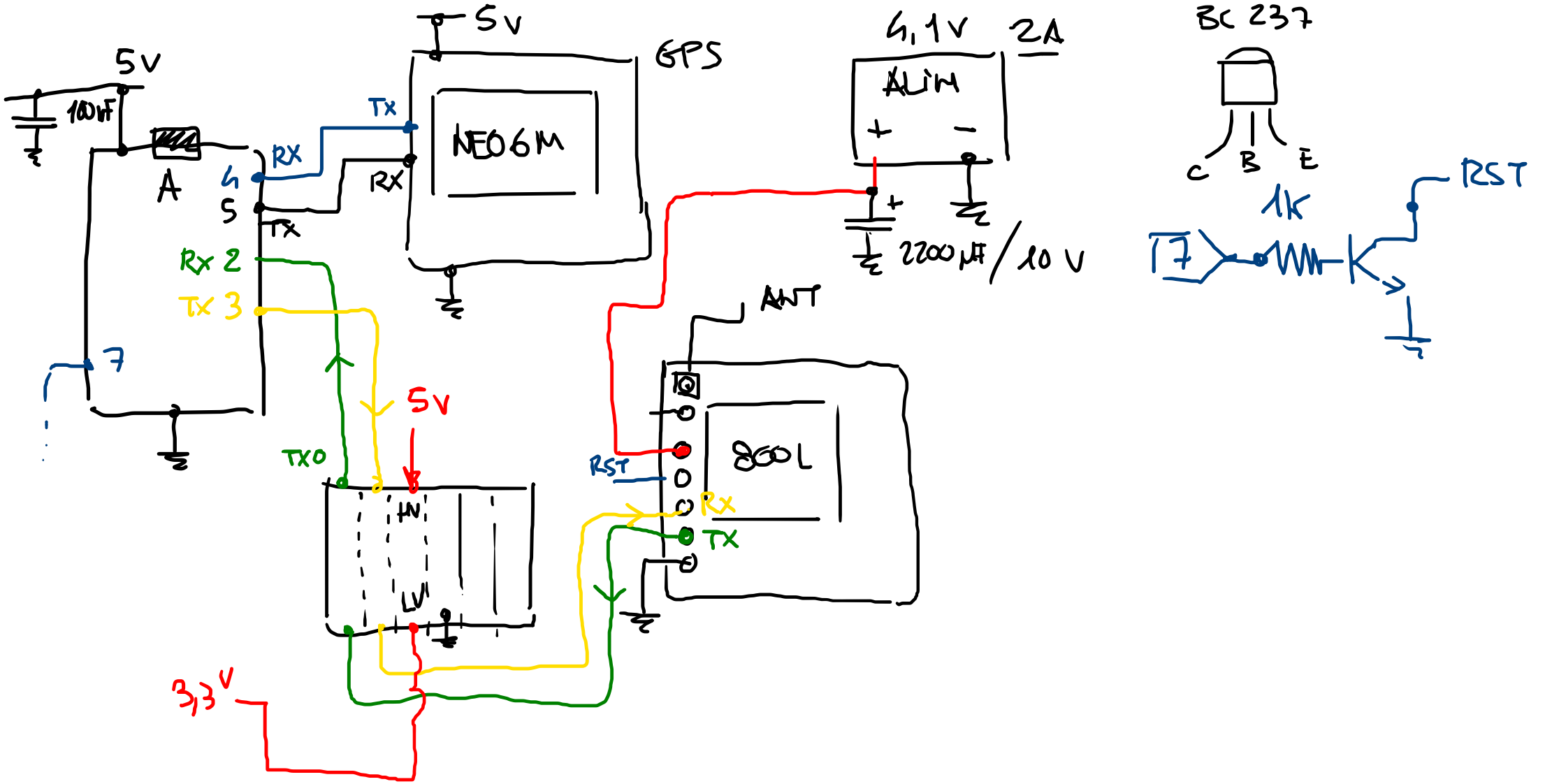
5V
100µF
A
4
5
RX
TX
Rx 2
Tx 3
7
5V
GPS
NEO6M
TX
RX
TXO
5V
HN
LV
3,3V
ANT
RST
Rx
TX
800L
4,1V
2A
ALIM
+
-
2200µF / 10 V
BC 237
C
B
E
1K
RST

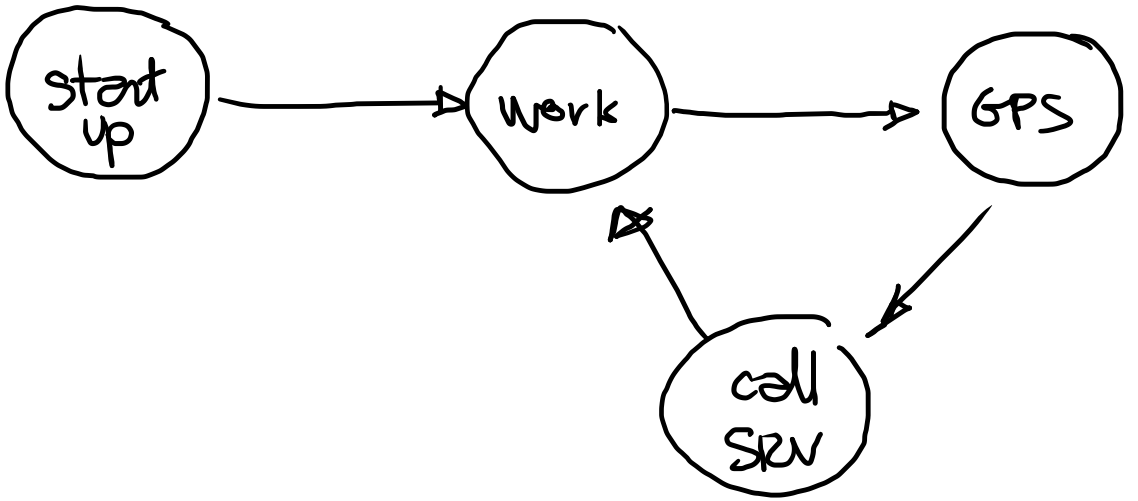
start up
work
GPS
call SRV