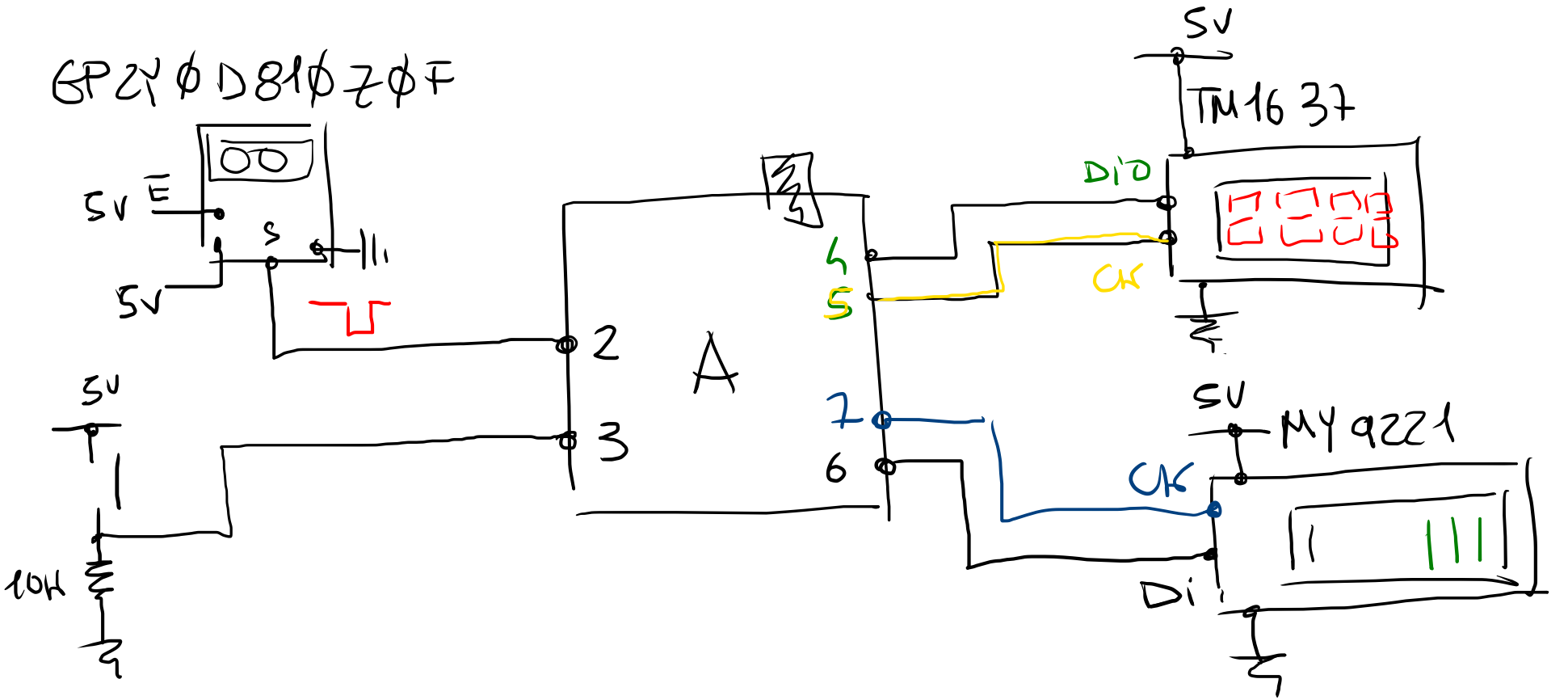GP2Y0D810Z0F