LORA. 3Km ··· 8Km

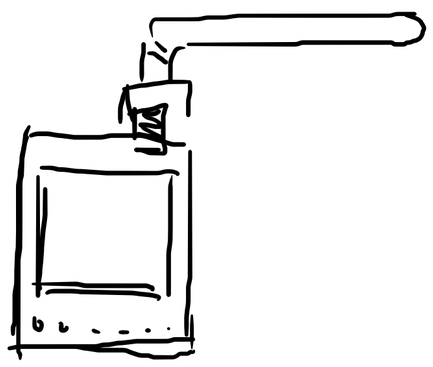

433MHz
868 ←
915

ebyte
E32
868T20D

TRANSPARENT

FIXED

FIXED
BROAD CAST

FIXED
MONITORING

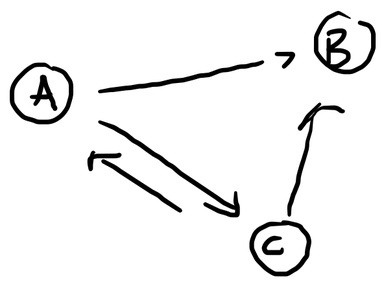

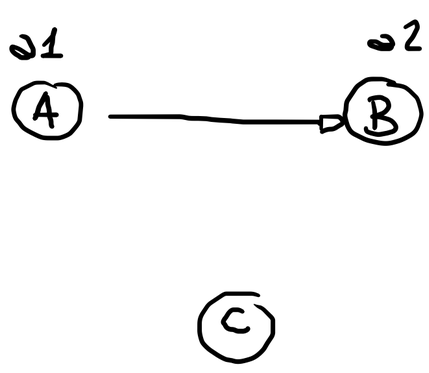

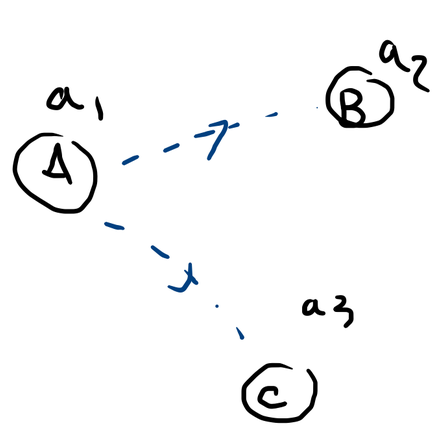

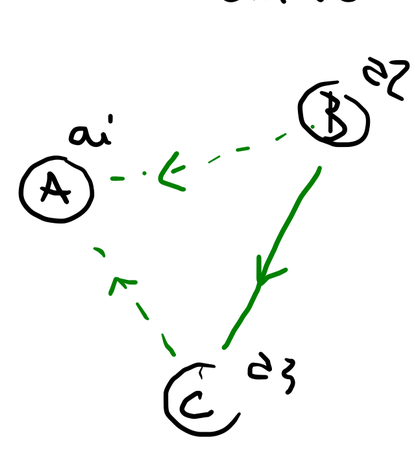

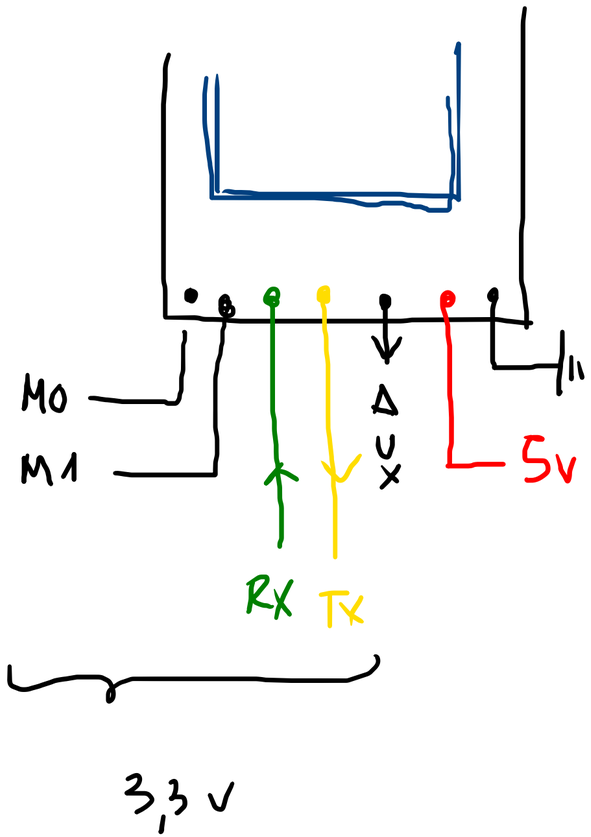

M0	M1		
L	L	NORM	
H	H	PROG	
L	H	POWER SAVE	VOIR
H	L	WAKE UP	

00 ÷ FF

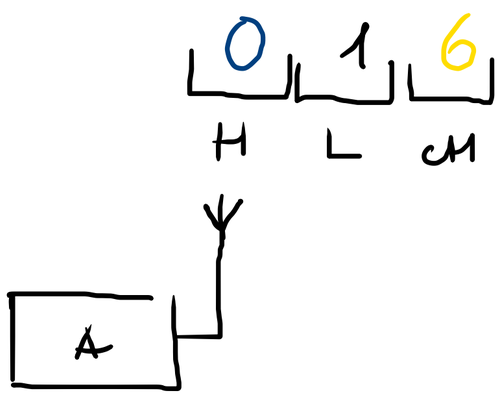

0 2 6

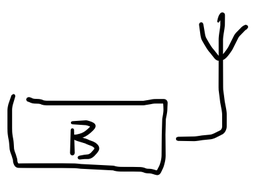

0 3 6

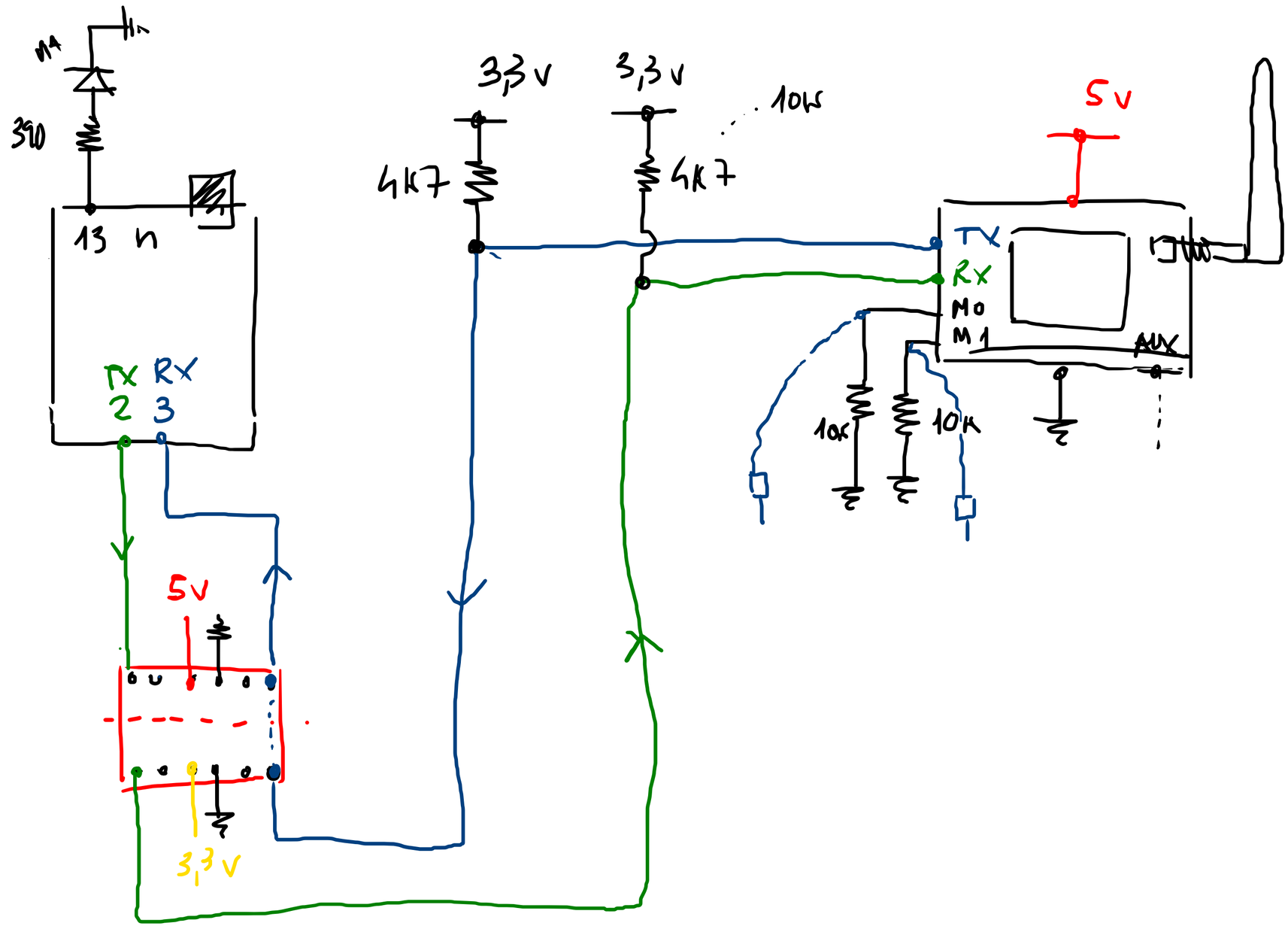

M1
390
13
n
TX
RX
2
3
5V
3,3V
3,3V
4k7
4k7
10k
5V
TX
RX
M0
M1
AUX
10k
10k