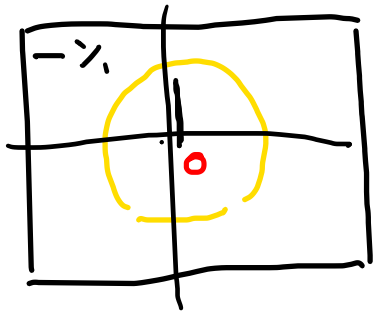


SSD 1306
OLED
I2C

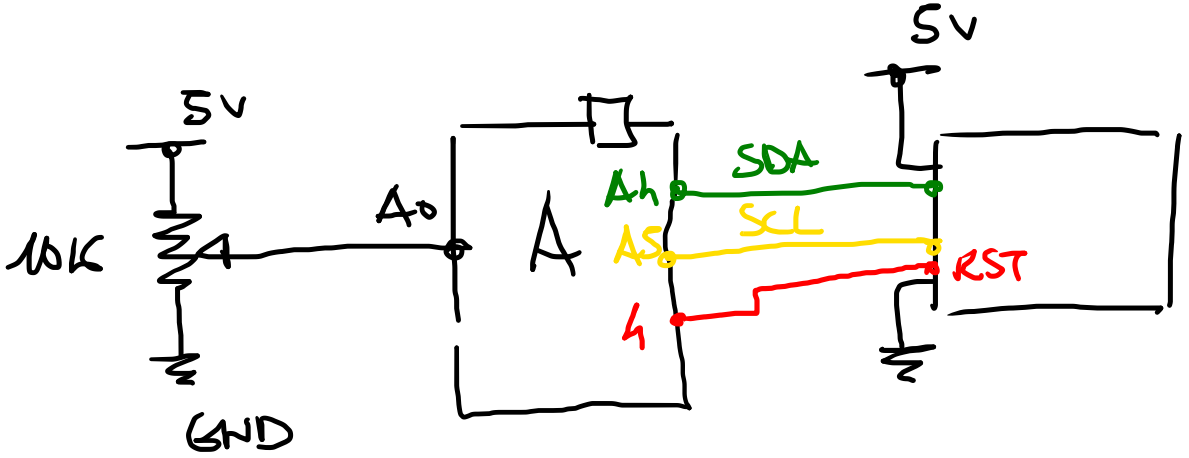


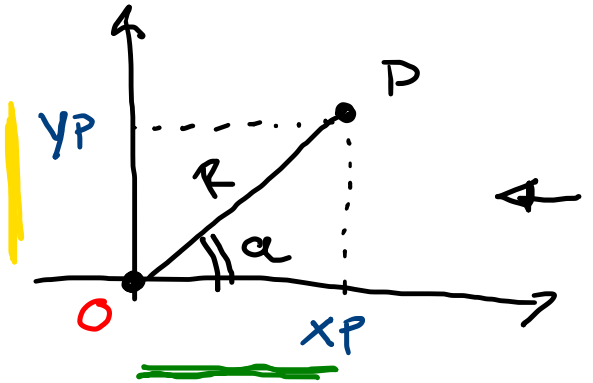


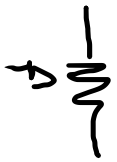

$0 \div 1023 \rightsquigarrow 0 \div 360^\circ \rightsquigarrow$

$0 \div 2\pi$

$6{,}28$

$$R \cdot \cos(a) = XP$$

$$YP = R \cdot \sin(a)$$