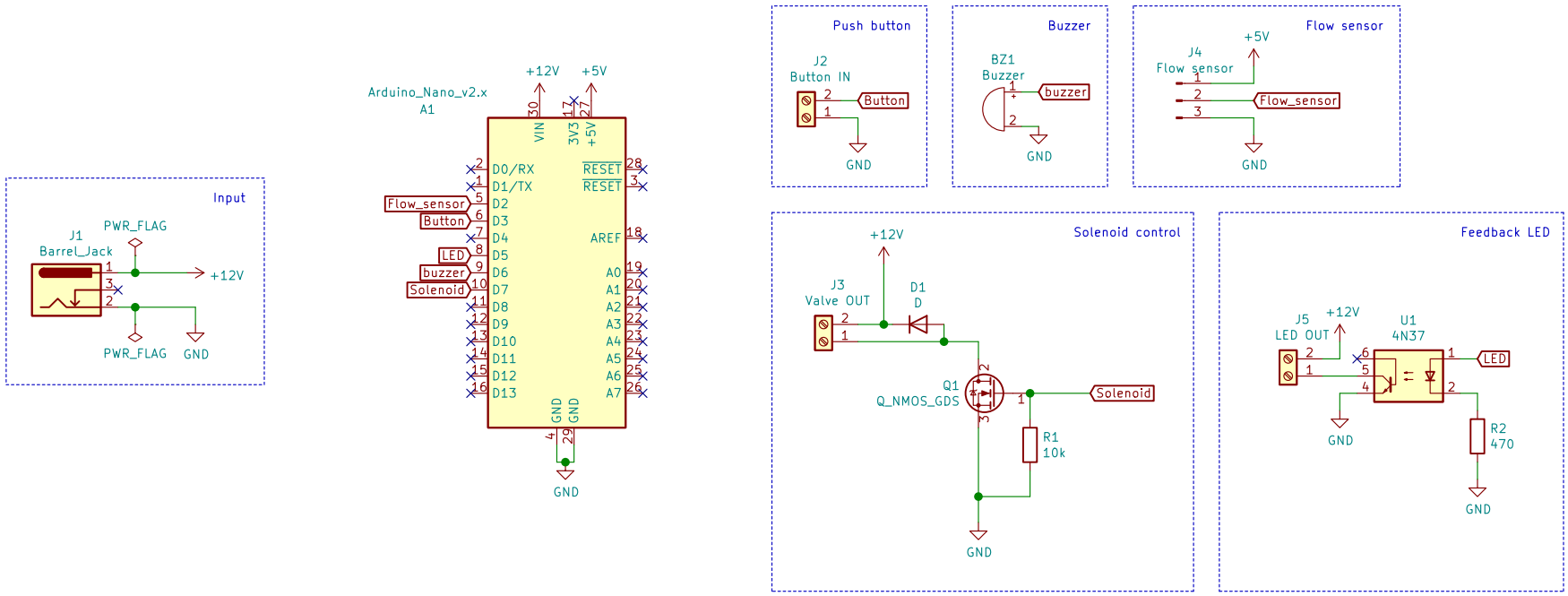

Solidify

Sheet: /

File: Sodastream autofill.sch

Title: Sodastream autofill controller

Size: A4	Date: 2022-10-15	**Rev: 1.0**
KiCad E.D.A. eeschema (5.1.12)-1		Id: 1/1