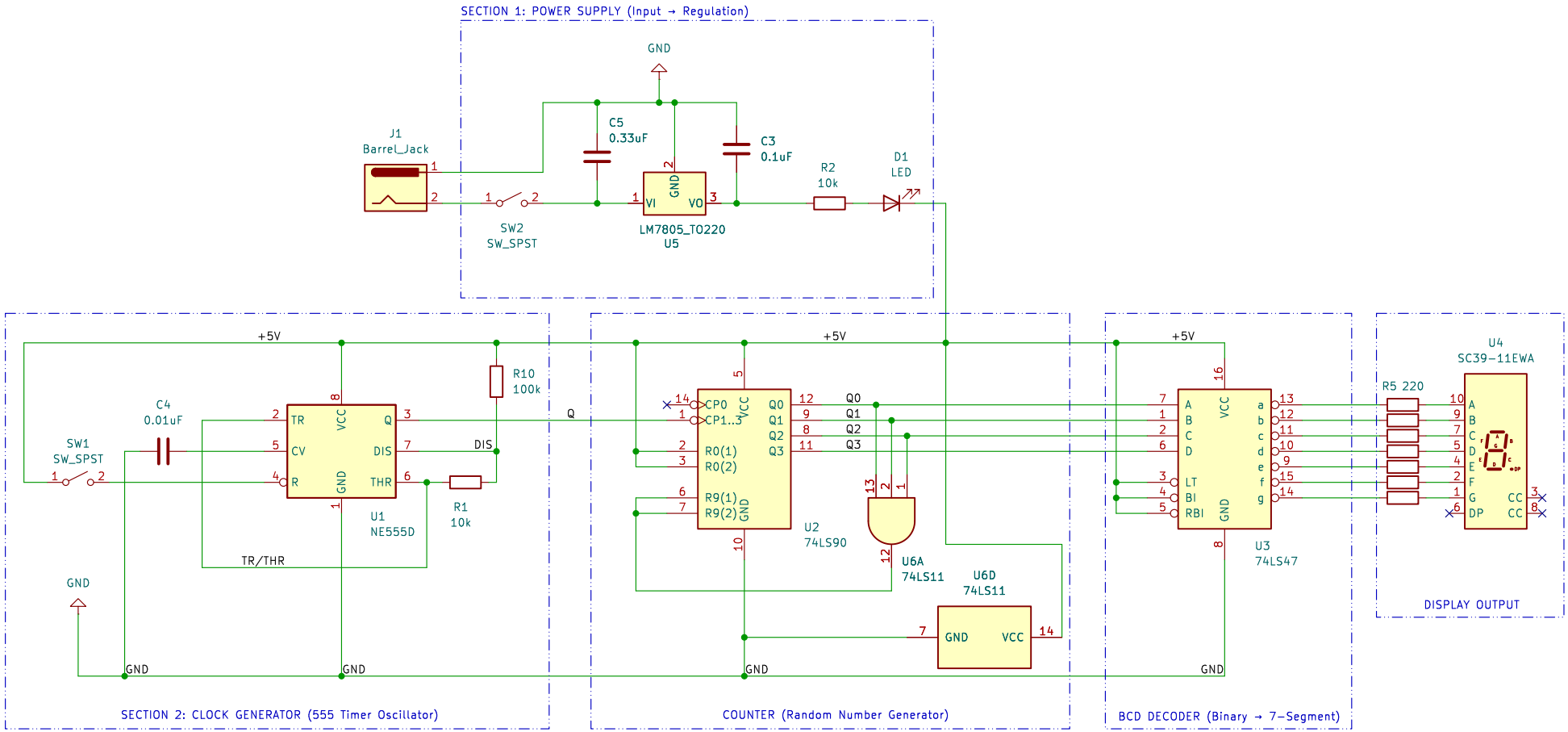

Github

Electronic dice circuit with 555 timer and 7-segment display. PCB

Vladyslav Hirchuk – git: SoloScriptSage

Sheet: /

File: digital_dice.kicad_sch

Title: Digital Dice

Size: A4	Date: 2025-11-09	**Rev: 1.0**
KiCad E.D.A. 9.0.2		Id: 1/1