VISVESVARAYA TECHNOLOGICAL UNIVERSITY

BELAGAVI–590018

A REPORT ON MAJOR PROJECT PHASE – II WORK

SOLAR BASED MULTI-PURPOSE AGRICULTURE ROBOT

Submitted in the partial fulfillment of the requirements for the award of the degree of

BACHELOR OF ENGINEERING

in

ELECTRONICS & COMMUNICATION

Project Associates

KRUTIKA S K	**4BD22EC050**
LAXMI S P	**4BD22EC052**
SANMATIKUMAR P B	**4BD22EC082**
SOMASHEKHAR JAVOORU	**4BD22EC096**

Mrs.RADHIKAPRIYA Y R

M.Tech, MISTE

Project Guide

Dr. G S SUNITHA

M.Tech (DEAC), Ph.D., MISTE, MIETE, FIETE, FIE

Program Coordinator

Dr. H B ARAVIND

B.E M.E.,Ph.D.,FIE,MISTE,FIEE

Principal

Bapuji Educational Association®

Bapuji Institute of Engineering and Technology

Davangere-577004

Department of Electronics & Communication Engineering 2025-2026

BAPUJI INSTITUTE OF ENGINEERING AND TECHNOLOGY

DAVANGERE, KARNATAKA – 577004

DEPARTMENT OF ELECTRONICS & COMMUNICATION ENGINEERING

Certificate

Certified that the Major-Project work entitled **SOLAR BASED MULTIPURPOSE AGRICULTURE ROBOT** carried out by Mr.SOMASHEKHAR JAVOORU, USN 4BD22EC096, a bonafide student of this institution in partial fulfillment for the award of degree of **Bachelor of Engineering in Electronics & Communication by Visvesvaraya Technological University,** Belagavi during the academic year **2025-26.** It is certified that all corrections / suggestions indicated for internal assessment have been incorporated in the report deposited in the departmental library. The report has been approved as it satisfies the academic requirements in respect of Project Work prescribed for the said degree.

Mrs. RadhikaPriya Y R

M.Tech, MISTE

Project Guide

Dr. G S Sunitha

M.Tech(DEAC),Ph.D.,MISTE,MIETE,FIETE,FIE

Program Coordinator

Dr. H B Aravind

B.E, M.E.,Ph.D.,FIE,MISTE,FIEE

Principal

External Viva-voce

Name of the Examiners	**Signature with Date**
1. ……	**……..**
2. ……	**……...**

Bapuji Institute of Engineering and Technology, Davangere-577004

Department of Electronics & Communication Engineering

VISION OF THE INSTITUTE

To be a center of excellence recognized nationally and internationally, in distinctive areas of engineering education and research, based on a culture of innovation and excellence.

MISSION OF THE INSTITUTE

BIET contributes to the growth and development of its students by imparting a broad-based engineering education and empowering them to be successful in their chosen field by inculcating in them positive approach, leadership qualities and ethical values.

VISION OF THE DEPARTMENT

To be in the forefront in providing quality technical education and research in Electronics & Communication Engineering to produce skilled professionals to cater to the challenges of the society.

MISSION OF THE DEPARTMENT

M1. To facilitates the students with profound technical knowledge through effective teaching learning process for a successful career.

M2. To impart quality education to strengthen students to meet the industry standards and face confidently the challenges in the program.

M3. To develop the essence of innovation and research among students and faculty by providing infrastructure and a conducive environment.

M4. To inculcate the student community with ethical values, communication skills, leadership qualities, entrepreneurial skills and lifelong learning to meet the societal needs.

COURSE LEARNING OBJECTIVES:

This course will enable us to:

1) Prepare with foundation knowledge in a project domain through designing, and implementing.

2) Introduce to various emerging fields in electronics and communication.

3) Provide an opportunity to exercise the creative and innovative qualities, to become technopreneurs in group project environment.

4) Have hands-on experience in the related fields so that students can integrate and reinforce what been taught in the classroom.

ABSTRACT

The increasing demand for automation in agriculture, coupled with labor shortages and the need for precision farming, has created a significant opportunity for intelligent agricultural machinery. This project presents an IoT-based multi-function agricultural robot controlled through Firebase Realtime Database using an ESP8266 microcontroller. The system integrates multiple agricultural operations including grass cutting, pesticide spraying, and automated seeding into a single autonomous platform. The robot features cloud-based directional control, relay-controlled agricultural implements, servo-assisted seeding mechanism, and ultrasonic obstacle detection for safety. By leveraging Firebase's real-time communication capabilities, the system enables remote monitoring and control of agricultural operations, reducing manual intervention while improving operational efficiency. The integration of obstacle detection ensures safe autonomous operation in agricultural environments. This research demonstrates a cost-effective, scalable solution for small to medium-scale farming operations, addressing the challenges of labor-intensive agricultural practices while maintaining precision and safety standards.

ACKNOWLEDGEMENT

I would like to acknowledge the help and encouragement given by various people during the course of this project.

I am deeply indebted and very grateful to the invaluable guidance given by Major-project guide **Mrs. Radhika Priya Y R**, Assistant Professor during this project work.

I would like to thank project coordinators **Dr. Leela G H**, Professor and **Mr. Yogesha K O**, Assistant Professor for the kind co-ordination during the course of the work.

I would like to express our gratitude to **Dr. G S Sunitha**, Professor and Head, Department of Electronics & Communication Engineering, BIET, Davangere, for her kind support, guidance and encouragement throughout the course of this work.

I am thankfull to our beloved Principal **Dr. H B Aravind** for providing excellent academic environment.

I would like to thank all the teaching and non-teaching staff of Dept .of E&CE for their kind co- operation during the course of the work. The support provided by the college and departmental library is greatly acknowledged.

Finally, I am thankful to our parents and friends, who helped us in one way or the other throughout our project work.

Project Associate:

Somashekhar Javooru

Table of contents

Abstract i

Acknowledgement ii

List Of Figures v

Chapter 1:INTRODUCTION 1

Chapter 2:LITERATURESURVEY 3

Chapter 3:PROBLEM IDENTIFICATION 6

Chapter 4:OBJECTIVE 7

Chapter 5:METHODOLOG 8

Chapter 6:HARDWARE REQUIREMENTS 11

6.1 ESP8266

6.2 DC MOTOR

6.3 GRASS CUTTER

6.4 RELAY

6.5 SOLAR PANEL

6.6 MINI WATER PUMP

6.7 ULTRASONIC

6.8 BATTERY

6.9 MULTI-CHANGE SEED SOWER

Chapter7: SOFTWARE DESCRIPTION 22

Chapter8: RESULT AND DISCUSSION 26

ADVANTAGES 32

APPLICATIONS 32

LIMITATIONS 32

CONCLUSION **33**

FUTURE SCOPE **34**

REFERENCES **35**

APPENDIX A - DATA SHEETS

APPENDIX B - CODE

COST ESTIMATION

COURSE OUTCOMES

CONTACT DETAILS

LIST OF FIGURES

Figure:5.1: Block Diagram 8

Figure: 5. 2: Flow Diagram 10

Figure:6.1.1: ESP866 11

Figure:6.1.2: ESP866 Pinout 11

Figure:6.2.1: DC-Motor 13

Figure:6.2.2: DC-Motor Pinout 13

Figure:6.3.1: Grass-Cutter 14

Figure:6.3.2: Grass-Cutter Pinout 14

Figure:6.4: Relay 15

Figure:6.5.1: Solar Panel 16

Figure:6.5.2: Solar Panel Pinout 16

Figure:6.6: Mini Water-Pump 17

Figure:6.7.1: Ultrasonic Sensor 18

Figure:6.7.2: Ultrasonic Sensor Pinout 18

Figure:6.8: Battery 19

Figure:6.9.1: Multi-change seed sower 20

Figure: 6.9.2: Schematic Diagram 21

Figure:7.1 : Arduino Uno 22

Figure:7.1.1: Visual Studio Code 23

Figure:7.1.2: Firebase Realtime Database Environment 24

Figure:8.1: Solar Based Multipurpose Robot 26

Figure:8.2: Obstacle Detection 27

Figure:8.3: Grass Cutting 28

Figure:8.4: Control Panel Application 29

Figure:8.4: Direction Control 30

Figure:8.4: Operation Mode 31

CHAPTER 1
INTRODUCTION

Agriculture is the backbone of India. The history of Agriculture in India dates back to Indus Valley Civilization Era and even before that in some parts of Southern India. Today, India ranks second worldwide in farm output. The special vehicles play a major role in various fields such as industrial, medical, military applications etc.,

The special vehicle field are gradually increasing its productivity in agriculture field. Some of the major problems in the Indian agricultural are rising of input costs, availability of skilled labours, lack of water resources and crop monitoring. To over come these problems, the automation technologies were used in agriculture. The agricultural census gives vital information on the distribution of land holdings in our country. According to the census majority of the farmers are having the land less than 1 hectare.

This is one of the major drawbacks for the ROBOT in agricultural sector in India. The vehicles are being developed for the processes for grass cutting, seed sowing, levelling, water/chemical spray systems. All of these functions have not yet performed using a single vehicle. In this the robots are developed to concentrate in an efficient manner and also it is expected to perform the operations autonomously. The lawn over is an aid in the mundane ask of grass cutting and tending to lawns. Due to the revolution of green movement in the present scenario the industries with major campus areas are changing the percentage of greenery in the campuses and increased greenery causes increased effort and moneyto tend to. In such cases the lawn mover proves to be a god sent.

Due to increased availability of system on chips, the lawn mover can be automated very easily and also the reduced size and cost of Dc motors causes the system to be independent of fossil fuels to be able to tap into renewable energies. The presence of Ultrasonic sensors and light dependent resistors in a smaller and cheaper packaging cause the bot to be more aware of its surroundings.

In recent years, the integration of robotics and Internet of Things (IoT) technologies has opened new possibilities for the modernization of agricultural practices. Automated agricultural vehicles can significantly reduce human effort while increasing accuracy, efficiency, and productivity. These smart systems are capable of performing repetitive tasks with minimal supervision, thereby addressing the challenges of labor scarcity and rising operational costs.

The proposed system focuses on developing a multi-functional agricultural robot capable of performing multiple farming operations such as grass cutting, seed sowing, pesticide spraying, and land maintenance using a single compact vehicle. This approach is especially beneficial for small and marginal farmers, who constitute the majority of India's agricultural population, as it reduces the need for multiple machines and minimizes investment costs.

By incorporating sensors such as ultrasonic sensors for obstacle detection and environmental awareness, the robot ensures safe and reliable operation in dynamic field conditions. The use of low-cost microcontrollers, efficient DC motors, and automation techniques makes the system economically viable and energy-efficient. Furthermore, the possibility of integrating renewable energy sources enhances sustainability and reduces dependence on conventional fuels.

Overall, this project aims to provide a practical, affordable, and scalable solution to improve agricultural productivity while supporting the transition toward smart and sustainable farming practices in India.

CHAPTER 2
LITERATURE SURVEY

1. Automated Pesticide Spraying System Using Image Processing for Disease Detection(2020)

A Srinath and K. B. Kalya (2020) presented an automated pesticide spraying system that uses image processing for plant disease detection. The main objective of their work was to reduce farmer exposure to chemicals while improving spraying precision. The system evaluates disease detection accuracy, pesticide usage efficiency, and operational cost. Raspberry Pi with Python-based machine learning algorithms was used for image processing, along with Bluetooth control. Although the system improved accuracy and reduced pesticide wastage, it was limited by dataset size, image quality, terrain constraints, and the need for manual refilling. The authors suggested integrating solar charging, expanding the disease database, and improving real-time image processing for taller crops.Smart Delivery Robot for Isolation Ward Using IoT

2. Low-Cost Autonomous Agricultural Robot for Fertilizer and Pesticide Spraying(2021)

Hussen Hajiaj and Kishseen Rao (2021) focused on developing a low-cost agricultural robot for spraying fertilizers and pesticides and for basic crop monitoring. Their study evaluated parameters such as plant coverage per minute, battery life, and efficient resource usage. The robot operated in autonomous mode with manual control for path placement. While the system was cost-effective, its productivity was lower (20 plants per minute) compared to manual labor (30 plants per minute). The authors proposed future improvements such as a fully autonomous system using rail-based or line-following mechanisms to reduce labor dependency and improve efficiency.

3. Smart Automated Seeding, Planting, and Pesticide Spraying System Using Machine Learning(2023)

Prof. S. G. Dighe and Dr. M. G. Sumithra (2023) proposed an automated farming system that integrates seeding, planting, and pesticide spraying to reduce human effort and improve precision. The system evaluated seed sowing accuracy and spraying efficiency using machine learning for disease detection and re-sowing. Despite automation benefits, the system suffered from limited battery life and required manual refilling of pesticides. The authors recommended integrating solar charging to extend operational duration and improve field usability.

4. Modular AI-Based Autonomous Farming Robot Using IoT(2024)

Yuktha Bhushan and Neetha S. S (2024) introduced a modular agricultural automation system designed to perform multiple farming tasks such as digging, leveling, and spraying. Their work focused on improving efficiency, precision, labor reduction, and sustainability. The system incorporated AI, sensors, autonomous navigation, and IoT technologies. However, challenges such as high initial cost, technical complexity, adaptability issues, and regulatory constraints were identified. Future enhancements included improving AI capabilities, ensuring scalability for small farms, integrating renewable energy sources, and enabling collaborative robotic systems.

SUMMARY OF LITERATURE SURVEY

Authors /Title of Paper /Year	Objectives / Issues Addressed	Parameter Evaluated	Adaptive Technique	Drawbacks	Open Issue / Improvements
Yuktha Bhushan, Neetha S. S/ Modular AI- based autonomous farming robot using IoT Year:2024	Automate farming tasks(digging, levelling , spraying) to enhance productivity and reduce labor.	Efficiency, precision, labor reduction, sustainability	Modular design, AI, sensors, autonomous navigation, IoT.	High initial cost, technical complexity, adaptability issues, regulatory constraints	Enhance AI, scalability for small farms, integrate renewable energy, collaborative robots.
Prof. S. G. Dighe Dr. M.G. Sumithra/ Smart automated seeding,planting and pesticide spraying system using machine learning. Year: 2023	Automate seeding, planting, and pesticide spraying to reduce human effort and improve precision.	Seed sowing accuracy, pesticide spraying efficiency	Machine learning for disease detection and re-sowing.	Limited battery life; manual refilling of pesticides.	Integration of solar charging for longer operation.
Hussen Hajjaj , Kisheen Rao / Low cost autonomous agricultural robot for fertilizer and pesticide spraying. Year:2021	Develop a low-cost agricultural robot for spraying fertilizers/pesticides and crop monitoring.	Plant coverage per minute, battery life, resource usage (fertilizer/pesticide).	Autonomous mode with manual control for path placement	Lower productivity (20 plants/min) compared to human workers (30 plants/min)	Future work: Fully autonomous system using rail- or line-following for reduced labor.
A.Srinath, K.B.Kalya/ Automated Pesticide spraying system using image processing for disease detection./ Year : 2020	Automate pesticide spraying using disease detection via image processing to reduce farmer exposure and improve precision.	Disease detection accuracy, pesticide usage efficiency, operational cost.	Raspberry Pi, machine learning (Python), image processing, Bluetooth control.	The system is limited by data size, image quality, manual refilling, terrain constraints, and technical complexity.	Improve system with auto-connection to ERD and cloud-based or app-based real-time alerts

CHAPTER 3
PROBLEM IDENTIFICATION

1. Dependence on sunlight limits long-range operation during low light or cloudy conditions.
2. Reduced energy availability affects continuous long-distance movement.
3. Limited battery capacity restricts extended field coverage.
4. High power consumption during long-range travel and operations.
5. Communication range limitations between robot and controller.

CHAPTER 4

OBJECTIVES

- To design solar based multipurpose agricultural robot.
- To provide a user-friendly remote-control interface for ease of operation.

CHAPTER 5
METHODOLOGY

5.1 BLOCK DIAGRAM

Figure 5.1 shows the block diagram of the solar-powered IoT-based multifunction agricultural robot system.

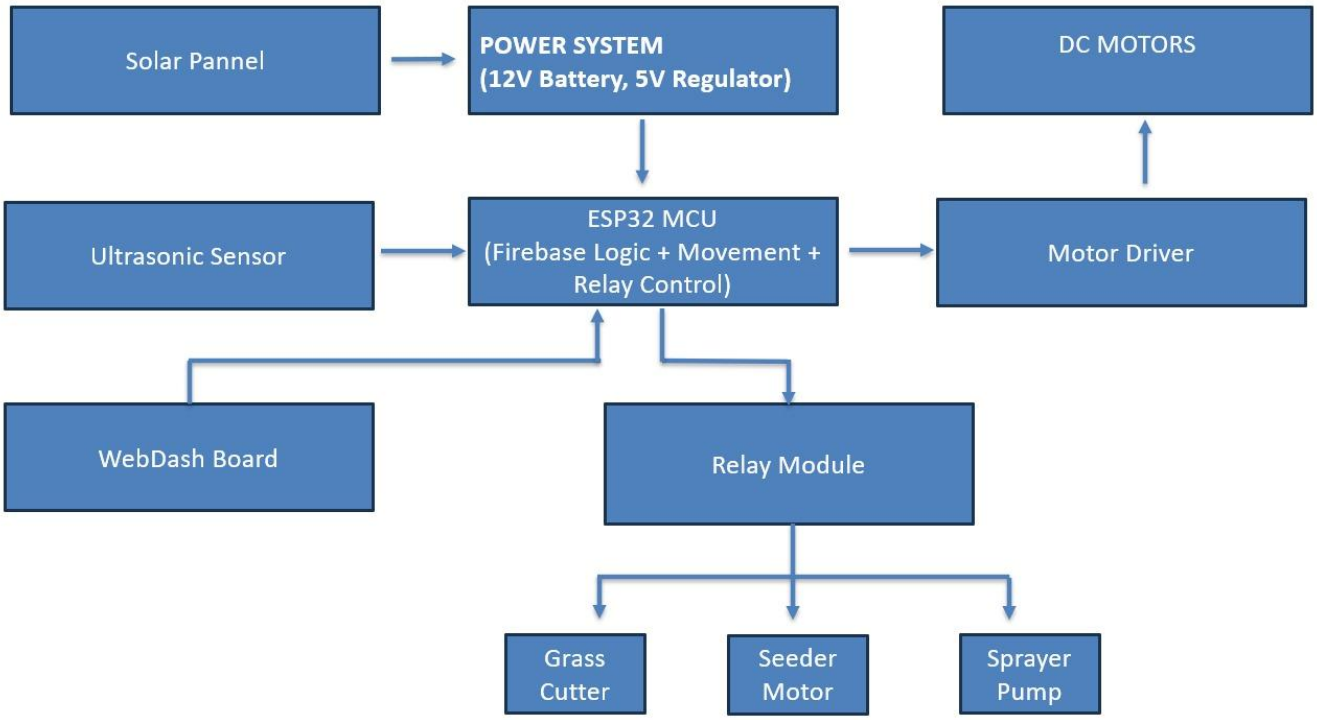

Fig:5.1BlockDiagram

The methodology for this project involves designing and developing an IoT-based multi-function agricultural vehicle capable of performing grass cutting, pesticide spraying and automated seeding in a single platform. The system integrates both hardware and software modules beginning with the construction of a mechanical chassis fitted with four DC motors to enable differential drive movement. An ESP8266 Node MCU microcontroller is used as the central control unit, interfaced with an L293D motor driver for wheel movement, a 4-channel relay module for controlling agricultural implements, a servo motor for seed dispensing adjustment, and an ultrasonic sensor for obstacle detection. The vehicle is connected to the Firebase Realtime Database via Wi-Fi, where control commands such as direction and task selection are stored and continuously monitored by the microcontroller.

1. Input Section

This section consists of all the components that sense or receive data from the environment and supply power to the system.

- **Solar Panel** – Captures renewable solar energy and converts it into electrical power.
- **Battery** – Stores the solar energy and provides a continuous power supply to the system.
- **Voltage Regulator** – Regulates and stabilizes the voltage supplied to electronic components.
- **Sensors (e.g., Ultrasonic Sensor, Soil Moisture Sensor)** – Detect obstacles and measure soil moisture levels for decision-making.

2. Intermediate Section

This section acts as the control and processing unit of the system.

- **ESP8266/Microcontroller** – Processes data from sensors and executes control logic.
- **Relay Module** – Acts as a switch to control high-power devices such as motors.
- **Motor Driver (L293D)** – Drives the DC motors based on signals from the microcontroller.
- **Communication Unit (Bluetooth/Wi-Fi module)** – Enables wireless control or monitoring of the robot.

3. Output Section

This section includes the action and display components that execute tasks or provide information.

- **DC Motors** – Drive the robot's movement and perform actions like grass cutting and spraying.
- **Water Pump/Motor** – Used for irrigation or spraying pesticides/fertilizers.
- **LCD Display** – Shows real-time data such as battery level, system status, and sensor readings.
- **Actuators/Relays** – Activate external devices based on control signals.

5.2Flow Diagram

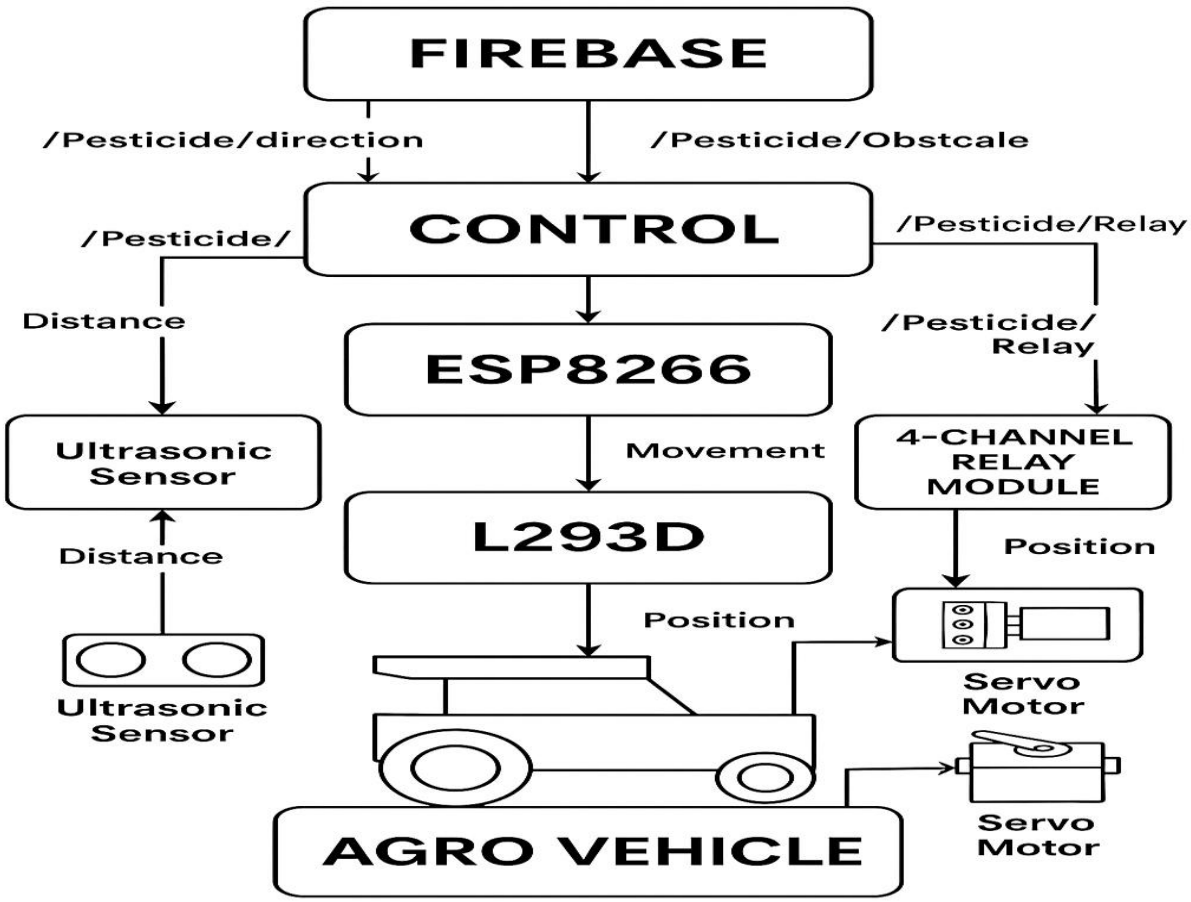

Fig 5.2 Flow Diagram

The design and functionality of the IoT-Based Multi-Function Agro Vehicle represent a significant step toward automation in precision farming. The system is architecturally centered around the ESP8266 microcontroller, which acts as the vehicle's brain, providing essential Wi-Fi connectivity to the Firebase Realtime Database. This cloud integration is paramount, allowing for real-time remote control over the vehicle's directional movement and the activation of its various implements, thereby reducing the need for continuous manual presence in the field. The vehicle successfully integrates multiple agricultural tasks—namely grass cutting, pesticide spraying, and automated seeding—into a single platform. These implements are controlled through relays and a servo mechanism. A crucial feature ensuring safety and reliability is the ultrasonic obstacle detection system, which mandates an immediate emergency stop if an obstruction is sensed, regardless of the remote commands. This combination of cost-effective hardware, a powerful cloud control interface, and integrated multi-functionality demonstrates a scalable and efficient solution aimed at improving operational speed and precision for small to medium-scale agricultural practices.

CHAPTER 6
HARDWARE DESCRIPTION

6.1 ESP8266:

Fig 6.1.1 shows the ESP8266 Microcontroller

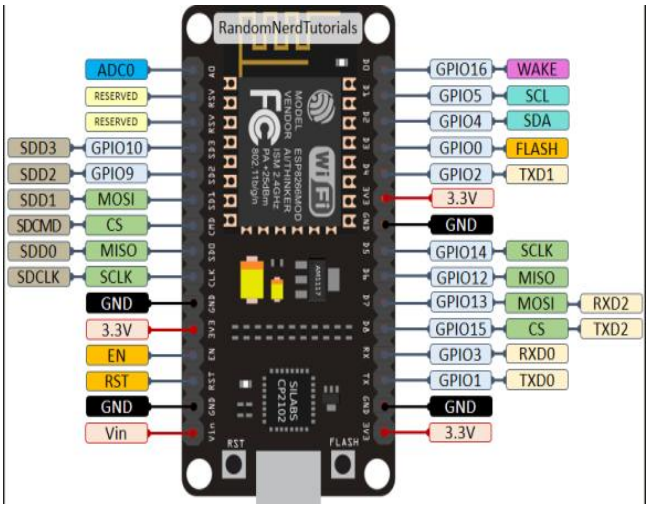

Fig 6.1.1ESP8266 PINOUT

Fig6.1.2 ESP8266

Specifications

- Type: Wi-Fi enabled microcontroller module.
- Processor: TensilicaL10632-bitMCU.
- Operating Voltage:3.3V.
- Clock Speed:80 MHz.
- Communication: Wi-Fi(802.11b/g/n),UART,SPI,I²C.
- GPIO Pins:Upto11programmableGPIOs.
- Current Consumption:~70mA during Wi-Fi transmission.
- Package Dimensions: Depends on module(ESP-12:~24 mm×16 mm).

In this project, the ESP8266 microcontroller acts as the central intelligent unit responsible for controlling the complete operation of the multi-function agricultural vehicle. The ESP8266 continuously connects to the Firebase Realtime Database through its inbuilt Wi-Fi module and reads the control commands given by the user through a mobile or web application. Based on the direction command received, it drives the L293D motor driver to rotate the four DC motors of the vehicle for forward, backward, left, right, or stop movement. Similarly, when a task mode such as grass cutting, pesticide spraying, or seeding is selected, the ESP8266 activates the corresponding relay to power that specific agricultural implement. The servo motor used for the seeding mechanism is also automatically positioned by the ESP8266 only when seeding mode is selected, ensuring accurate seed deposition. Along with actuation control, the ESP8266 continuously receives distance data from the ultrasonic sensor and stops the vehicle immediately if an obstacle is detected, while also sending safety alerts back to Firebase. Thus, the ESP8266 performs real-time communication, sensor monitoring, data processing, and decision-making functions, making the system fully automated, remotely operable, and safe for agricultural use.

6.2 Dc-Motor

Fig 6.2.2 Shows the DC Motor and Interface shown in fig 6.2.1

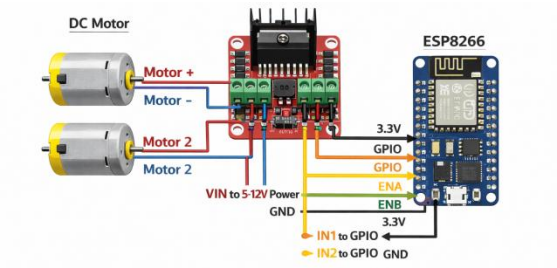

Fig6.2.2 :DC-Motor Pinout

Fig6.2.1:DC-Motor

SPECIFICATIONS:

- Rated Voltage: 12 V, 24 V, 110 V, 220 V
- Rated Power: Few watts to several kW
- Rated Speed: 500 – 3000 rpm
- Rated Current: As per load (A)
- Torque: Starting & rated torque (Nm)
- Efficiency: ~70% – 90%

Role of DC Motor in the Project

The DC motor is used to provide mechanical movement to the multipurpose agriculture robot. It drives the wheels and agricultural tools such as ploughing, seed sowing, or spraying mechanisms. By controlling the DC motors through a motor driver and microcontroller, the robot can move forward, backward, left, and right and perform field operations efficiently.

Description of DC Motor

A DC motor is an electromechanical device that converts direct current (DC) electrical energy into rotational mechanical energy. In this project, the DC motors are interfaced with a motor driver module, which is controlled by the microcontroller. The motor driver helps in controlling the speed and direction of the motors by varying the input signals. DC motors are preferred due to their simple construction, easy control, low cost, and reliability, making them suitable for agricultural robotic applications.

6.3 Grass-Cutter

Fig 6.3.2 Shows Grass Cutter and Interface shown in fig 6.3.1

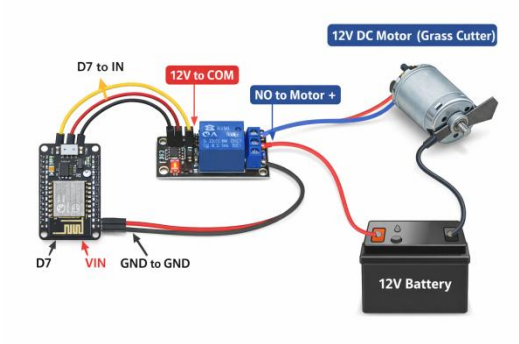

Fig 6.3.1:Grass-Cutter Pinout

Fig 6.3.2: Grass-Cutter

SPECIFICATIONS:

- Rated Voltage: 12 V, 24 V, 110 V, 220 V
- Rated Power: Few watts to several kW
- Rated Speed: 500 – 3000 rpm
- Rated Current: As per load (A)
- Torque: Starting & rated torque (Nm)
- Efficiency: ~70% – 90%

Role of Grass Cutter in the Project

The grass cutter is used to cut unwanted grass and weeds in agricultural fields. It helps farmers in clearing land, maintaining crops, and reducing manual labor. In the multipurpose agriculture robot, the grass cutter performs automated cutting, saving time, effort, and cost.

Description of Grass Cutter

The grass cutter consists of a high-speed DC motor attached to a sharp rotating blade. When power is supplied, the motor rotates the blade at high speed, which cuts grass and small plants efficiently. The grass cutter is controlled through a relay or motor driver connected to the microcontroller. Due to its simple construction, effective cutting action, and easy control, it is suitable for agricultural robotic applications.

6.4 Relay

Fig 6.4.2 Shows the Relay and Interface shown in fig 6.4.1

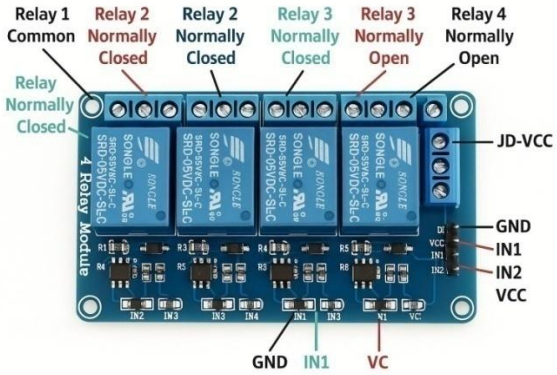

Fig6.4.1:RelayModule

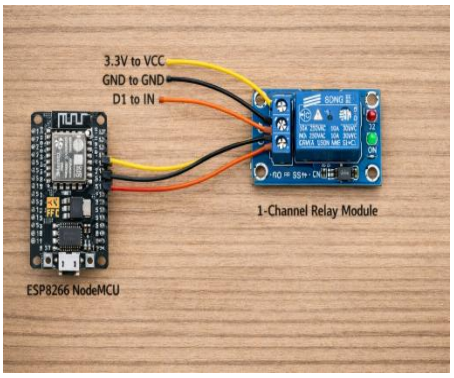

Fig6.4.2:Relay Pinout

SPECIFICATIONS:

- Type: Electromechanical / Solid State
- Coil Voltage: 5 V, 12 V, 24 V, 110 V, 230 V
- Coil Current/Resistance: As specified by manufacturer
- Contact Type: NO / NC / SPDT / DPDT
- Contact Rating: 5 A – 30 A (at rated voltage)
- Operating Time: ~5 – 20 ms

Role of Relay in the Project

The relay is used as an electrical switch to control high-power devices such as the grass cutter motor, water pump, or other tools using low-power signals from the microcontroller. It provides safe isolation between the control circuit and high-voltage components, ensuring reliable and secure operation of the robot.

Description of Relay

A relay is an electromagnetic switching device that operates by energizing a coil to open or close electrical contacts. In this project, the relay module receives control signals from the microcontroller and switches ON or OFF external loads. Relays are widely used because they allow low-voltage control of high-current devices, making them suitable for agricultural automation systems.

6.5 Solar Panel

Fig 6.5.2 Shows the Solar Panel and Interface shown in fig 6.5.1

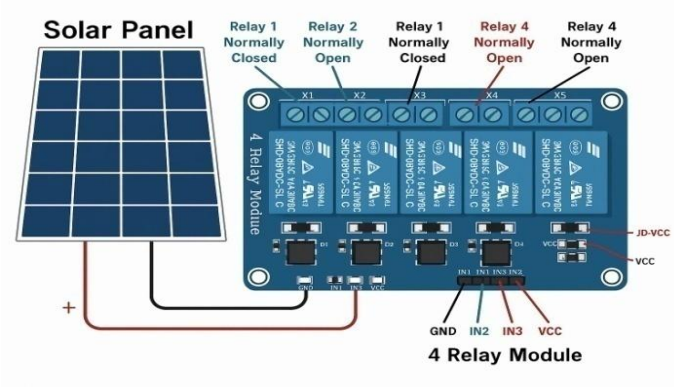

Fig6.5.1:SolarPanel Pinout

Fig6.5.2:Solar Panel

SPECIFICATIONS:

- Type: Monocrystalline / Polycrystalline / Thin-film
- Rated Power (Pmax): 100 W – 600 W
- Efficiency: 15% – 23%
- Voltage (Vmp): ~18–40 V
- Current (Imp): ~5–15 A
- Open Circuit Voltage (Voc): ~20–50 V
- Short Circuit Current (Isc**):** ~5–16 A

Role of Solar Panel in the Project

The solar panel is used as the primary power source to supply electrical energy to the multipurpose agriculture robot. It converts sunlight into electrical power, which is utilized to operate the microcontroller, relay module, sensors, motors, and other agricultural tools. The use of a solar panel reduces dependency on conventional power sources and enables continuous operation in remote agricultural fields.

Description of Solar Panel

A solar panel is a renewable energy device that converts solar energy into direct current (DC) electrical power using photovoltaic cells. In this project, the generated power is regulated and distributed to different modules through suitable interfacing circuits and relay control. The solar panel ensures efficient energy utilization, eco-friendly operation, and long-term sustainability of the agriculture robot, making it suitable for rural and off-grid farming applications.

6.6 12V DC High Pressure Mini Water Pump(SPRAY)

Fig 6.6.1 Shows the Mini Water Pump

Fig6.6.: Mini Water Pump

SPECIFICATIONS:

- Spray type: Fine aerosol / mist
- Droplet size: ~1–50 µm
- Carrier gas: Air / Nitrogen / Oxygen
- Flow rate: Controlled (≈ 1–10 ml/min)
- Nozzle type: Pneumatic / Ultrasonic
- Substrate temperature: 300–500 °C
- Spray distance: 20–40 cm

Role of 12V DC High Pressure Mini Water Pump in the Project

The 12V DC high pressure mini water pump is used to spray water, pesticides, or fertilizers on crops as required. It provides controlled and uniform spraying, helping in effective irrigation and pest control. The pump is operated through a relay module or motor driver, allowing the microcontroller to turn the spraying system ON or OFF automatically based on the farming operation.

Description of 12V DC High Pressure Mini Water Pump

The 12V DC high pressure mini water pump is an electrically operated device designed to move liquid at high pressure. In this project, the pump draws water or chemical solution from a tank and delivers it through a spray nozzle for agricultural applications. It operates on DC power and is suitable for portable systems due to its compact size and efficiency.

6.7 Ultrasonic Sensor

Fig 6.7.2 Shows the Ultrasonic sensor and Interface shown in fig 6.7.1

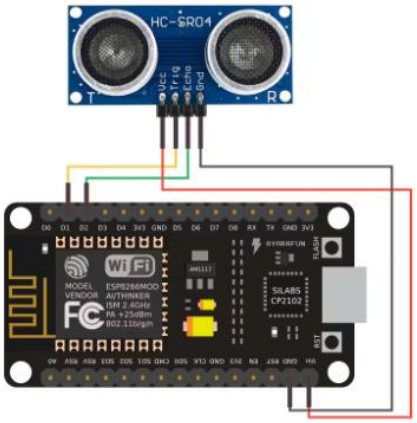

Fig6.7.1:Ultrasonic Sensor Pinout

Fig6.7.2:Ultrasonic Sensor

SPECIFICATIONS:

- Working Voltage: DC5V
- Working Current :15mA
- Working Frequency:40Hz
- Max Range:4m
- Min Range:2cm
- Trigger Input Signal:10uSTTLpulse
- Dimension:45*20*15mm

Role of Ultrasonic Sensor in the Project

The ultrasonic sensor is used to detect obstacles and measure distance between the robot and surrounding objects. It helps the multipurpose agriculture robot to avoid collisions with plants, stones, animals, or other obstacles during movement in the field. This improves navigation safety and ensures smooth and efficient operation of the robot.

Description of Ultrasonic Sensor

An ultrasonic sensor is a distance-measuring device that works by transmitting ultrasonic sound waves and receiving the reflected echo from an object. In this project, the sensor calculates the distance based on the time taken for the echo to return. The sensor is interfaced with the microcontroller, which processes the distance data and controls the robot's movement accordingly.

6.8 Battery

Fig 6.8.2 Shows the Battery

Fig6.8.1:Battery

SPECIFICATIONS

- Capacity: 2500 mAh
- Voltage: 3.7V (single cell)
- Discharge Rating: 10C–25C (varies by model)
- Type: Li-Po (Lithium Polymer)
- Rechargeable: Yes

Role of Battery in the Project

The battery is used as the main power storage unit for the multipurpose agriculture robot. It supplies the required electrical energy to operate the microcontroller, sensors, motors, relay modules, and water pump. The battery ensures continuous and stable power supply, enabling the robot to function efficiently in field conditions where external power sources are not available.

Description of Battery

The battery used in this project is a rechargeable lithium-based battery with a capacity of 2500 mAh and a nominal voltage of 3.7V per cell. It provides reliable DC power to all electronic and electrical components of the robot. The battery can be recharged using a suitable charging circuit, including solar charging. Due to its high energy density, lightweight nature, and rechargeability, the battery is well suited for portable and autonomous agricultural automation systems.

6.9 Multi- change seed sower:

Fig 6.9.1 Shows the Multi-change seed sower

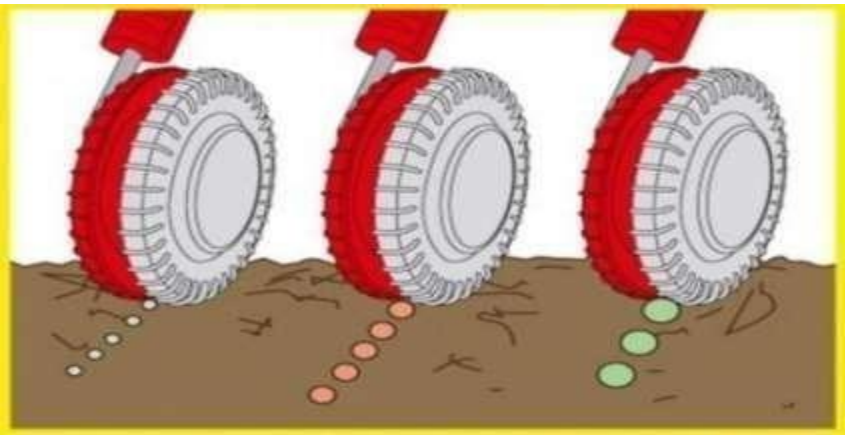

Fig6.9.1 :Multi-changeseedsower

Role of Multi-Change Seed Sower in the Project

The multi-change seed sower is used to automatically sow seeds into the soil in a straight and uniform manner. It allows the robot to plant different types and sizes of seeds with proper spacing, reducing manual labor and time. This mechanism improves planting accuracy and ensures better crop growth by maintaining uniform seed distribution.

Description of Multi-Change Seed Sower

The multi-change seed sower is a mechanical tool integrated with the multipurpose agriculture robot for efficient seed planting. It consists of adjustable seed dispensing wheels that allow sowing of various seed sizes using different settings. The sower places seeds at uniform depth and spacing, ensuring straight rows and optimal plant growth. Its lightweight and adaptable design makes it suitable for different crops, helping farmers achieve higher efficiency and precision in agricultural operations.

6.9.2 SCHEMATIC DIAGRAM

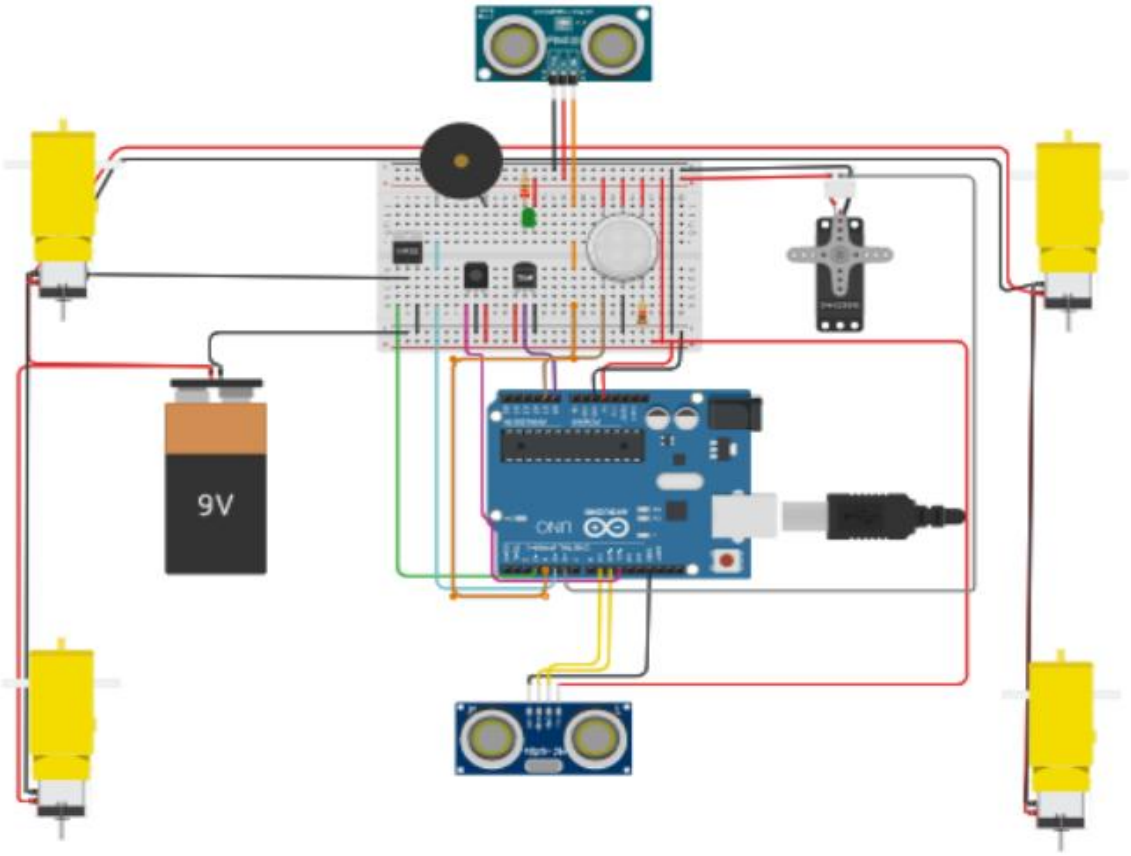

Fig 6.9.2 Schematic Diagram

The schematic diagram shows the complete hardware connection of the IoT-Based Multi-Function Agricultural Robot. The Arduino/ESP8266 controls all sensors and motors. Four DC motors connected through a motor driver provide movement in all directions. Ultrasonic sensors detect obstacles and stop the robot automatically for safety. A servo motor operates the seed dispensing mechanism. A buzzer and LED give alert and status indication. The system is powered by a 9V battery with a common ground connection. The motor driver ensures proper current supply and protects the microcontroller from damage. The overall design improves automation, reduces manual effort, and increases agricultural productivity.

CHAPTER 7
SOFTWARE DESCRIPTION

Arduino IDE

Description: The Arduino Integrated Development Environment (IDE) is an open-source software platform for writing, compiling, and uploading code to Arduino-compatible microcontrollers including ESP8266.

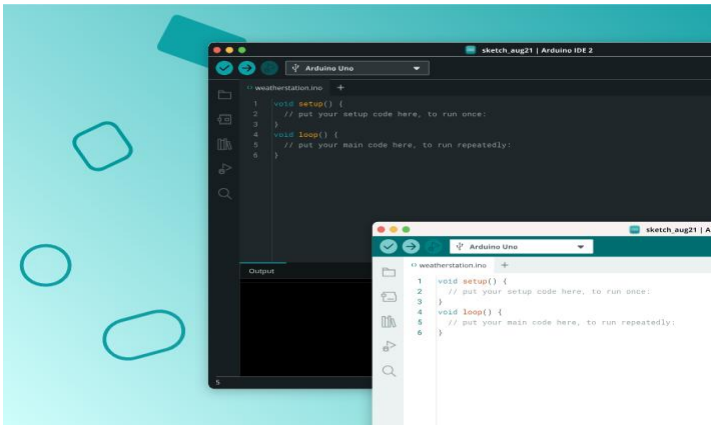

Fig7.1 Arduino Uno

The Arduino IDE (Integrated Development Environment) is a software application used to write, compile, and upload code to Arduino microcontrollers. It is a user-friendly interface that simplifies the process of programming and prototyping electronic devices. The IDE is opensource and available for free download on the Arduino website.

The Arduino IDE supports the C++ programming language and includes a code editor, compiler, and uploader. It also includes a library of pre-written code examples that can be used as a starting point for projects. The IDE is compatible with a wide range of Arduino boards, including the popular Uno, Nano, and Mega models.

The IDE includes a serial monitor that allows for real-time communication between the Arduino board and the computer. This can be used for debugging and for displaying output from the Arduino board.

The IDE also supports the use of third-party libraries, which can be used to add additional functionality to Arduino projects. Overall, the Arduino IDE is a powerful tool for anyone interested in developing and prototyping electronic devices, from beginners to experienced developers.

VISUAL STUDIO CODE

Fig7.1.1 Visual Studio Code Development Environment

VS Code provides a highly customizable environment where extensions can be added for ESP8266 board support, Firebase integration, and serial communication. It helps in real-time debugging by showing errors and warnings clearly, which reduces troubleshooting time. Auto-formatting and code suggestions improve code quality and readability. The editor also supports live code updates and quick navigation between files, which is helpful when working with large programs. VS Code works smoothly on low-end systems and consumes less memory, making it ideal for continuous development and testing.

Firebase Realtime Database

Fig7.1.2 Firebase Realtime Database Structure

Firebase is a cloud-based platform used to store and synchronize data in real time. In our project, Firebase is used to send control commands from the user to the agricultural robot through the internet. It allows remote monitoring and control of robot movement and operations. Firebase provides fast data transfer, high reliability, and secure database management. It helps in real-time communication between the mobile/web application and the ESP8266 controller.

Description**:** Firebase Realtime Database is a cloud-hosted NoSQL database that synchronizes data in real-time across all connected clients. Data is stored as JSON and accessible through REST full APIs or SDKs.

Provides cloud-based real-time synchronization for storing control commands and robot status, enabling remote operation through the internet.

Required Arduino Libraries:

- Firebase ESP8266 Library (for cloud communication)
- ESP8266WiFi Library (for Wi-Fi connectivity)
- Servo Library (for servo motor control)

These enable communication with Firebase and hardware control in the ESP8266.

Web or Mobile Application Software:

Built using HTML, CSS, Java Script with Firebase JavaScript SDK for remote control interface development to send commands and monitor live status.

CHAPTER 8
RESULT AND DISCUSSION

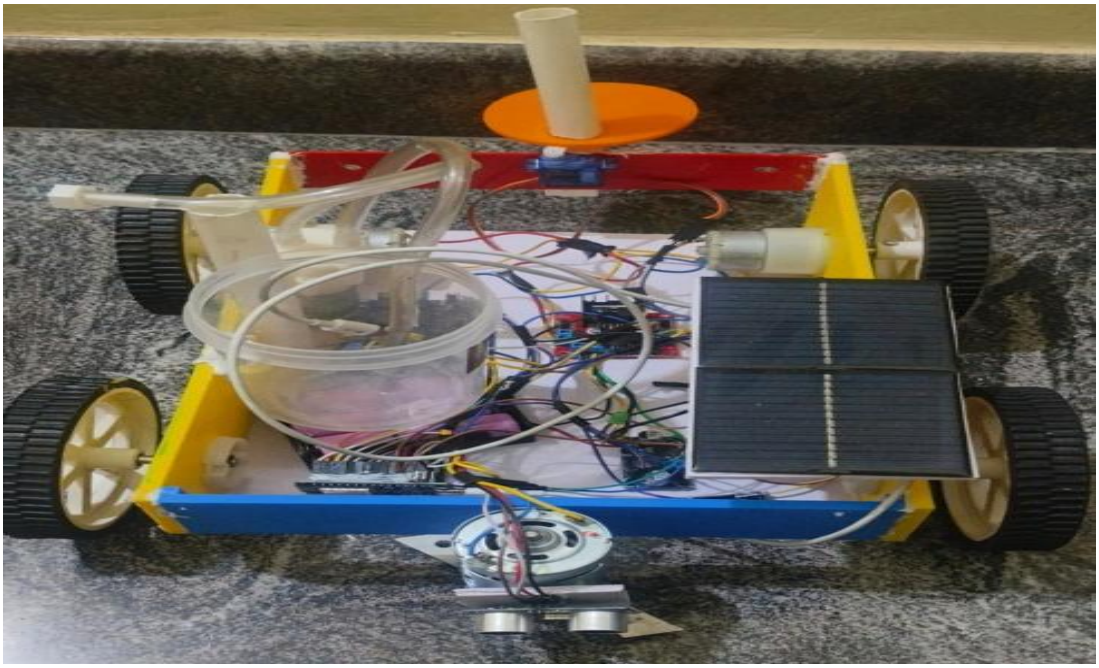

Fig 8.1. Solar based multipurpose robot

Function 1: Automated Seed Sowing and Spraying

The multipurpose agriculture robot performs automated seed sowing and spraying operations to reduce manual effort in farming. The seed sower mechanism places seeds at uniform depth and spacing, ensuring proper germination and healthy crop growth. Fig. 8.1 shows the seed sowing and spraying operation of the multipurpose agriculture robot. The spraying system is used to distribute water, fertilizers, or pesticides evenly over the crops. This automation minimizes human involvement, reduces labor cost, improves productivity, and ensures efficient utilization of agricultural resources.

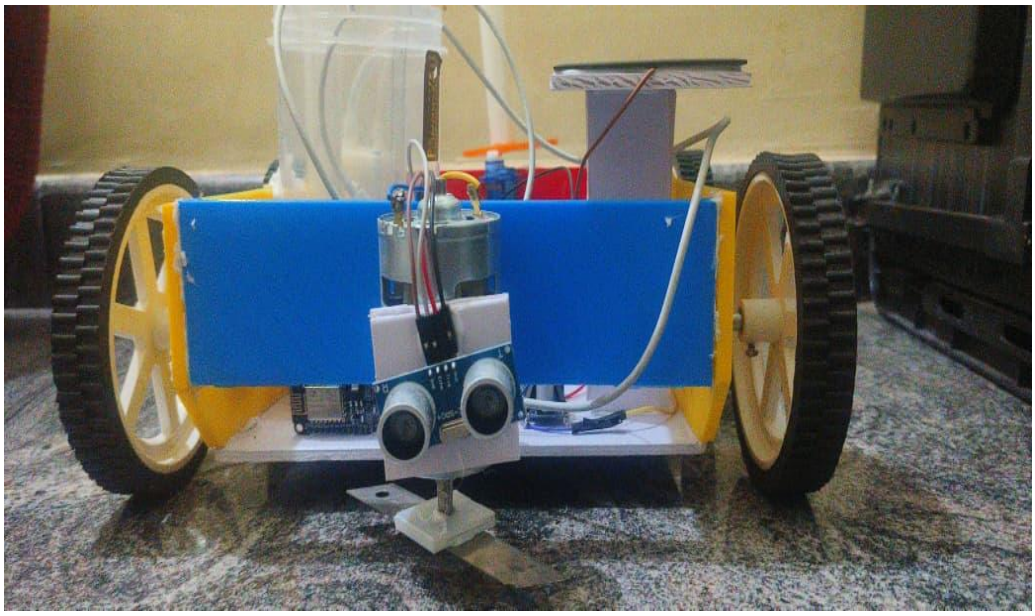

Fig 8.2 Obstacle Detection

Function 2: Obstacle Detection and Solar-Powered Operation

The robot is equipped with an ultrasonic sensor that detects obstacles such as stones, plants, or animals in its path and helps the robot avoid collisions. This ensures safe movement and smooth operation in the field. Fig. 8.2 shows the obstacle detection and solar-powered operation of the multipurpose agriculture robot. The system is powered by a solar panel with battery backup, enabling the robot to operate continuously without external power. The use of renewable solar energy makes the robot eco-friendly, energy-efficient, and suitable for agricultural applications in remote and rural areas.

Fig 8.3 Grass Cutting

Function 3: Automated Grass Cutting and Weed Control

The robot performs automated grass cutting to remove unwanted grass and weeds from the agricultural field. The grass cutter mechanism uses a high-speed rotating blade driven by a DC motor to trim excess vegetation as the robot moves forward. Fig. 8.3 shows the grass cutting operation of the multipurpose agriculture robot. This function helps maintain a clean field, reduces manual labor, and prevents weeds from affecting crop growth. The automated grass cutting operation improves field maintenance and increases overall farming efficiency.

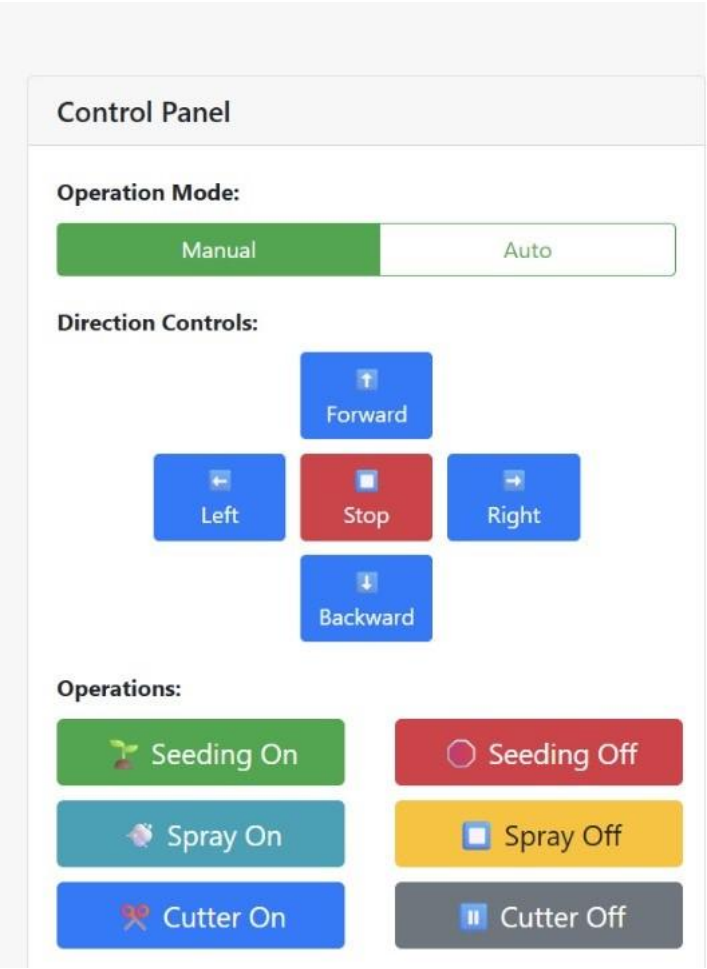

Fig 8.4 Control Panel Application

Web Robot Control Application – Description

The web robot control application provides a simple and user-friendly interface to operate the IoT-Based Multi-Function Agricultural Robot remotely. The control panel allows the user to select the operation mode, control the movement of the robot, and activate or deactivate agricultural functions such as seeding, spraying, and cutting.

Operation Mode

The application offers two modes: Manual and Auto. In Manual mode, the user directly controls the robot movement using direction buttons. In Auto mode, the robot can operate automatically based on programmed logic and sensor input

Direction Control

Fig 8.5 Direction Control

The direction control panel consists of control buttons for Forward, Backward, Left, Right, and Stop. These buttons send commands to the robot through Firebase in real time. Fig. 8.5 shows the direction control panel of the multipurpose agriculture robot. When a button is pressed, the corresponding command is transmitted to the ESP8266 controller, which processes the command and controls the robot's movement. This system provides precise and reliable remote control, improving ease of operation and efficiency in agricultural tasks.

Operations Control

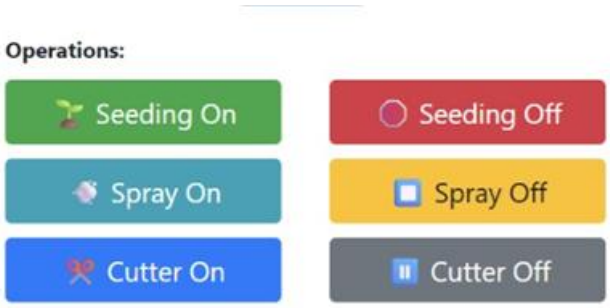

Fig 8.6 Operation Mode

The operation mode section provides control buttons for Seeding, Spraying, and Cutting operations. Each function is interfaced with a relay module in the robot for safe switching. Fig. 8.6 shows the operation mode control of the multipurpose agriculture robot. When a user selects an operation, the command is sent to Firebase, and the ESP8266 controller activates or deactivates the corresponding function instantly. This feature enables flexible control, efficient operation, and better management of multiple agricultural tasks.

Real-Time Communication

The application uses Firebase Realtime Database to synchronize commands between the web interface and the robot. This ensures low latency, reliable control, and real-time feedback.

ADVANTAGES

- Reduces manual labor and physical effort in farming.
- IoT-based remote control helps operate the vehicle from a safe distance.
- Protects farmers from direct contact with harmful pesticides.
- Multi-function system performs grass cutting, spraying, and seeding in one machine.
- Increases farming efficiency and saves time during cultivation.

LIMITATIONS

- The system depends on internet connectivity, so it may not work properly in remote areas with poor network coverage.
- Battery backup is limited, which restricts continuous working time in the field.
- The vehicle can operate only on flat and smooth surfaces; uneven farmland may affect performance.

APPLICATIONS

- Used for cutting grass in farms, gardens, and fields.
- Helpful for pesticide spraying without exposing farmers to harmful chemicals.
- Can be used for seed sowing in small and medium-size farms.
- Useful in precision agriculture to reduce labor effort and increase efficiency.
- Suitable for remote monitoring and controlling of farming operations through IoT.

CONCLUSION

This project successfully developed an IoT-based multi-function agricultural vehicle that can perform grass cutting, pesticide spraying, and seed sowing using a single platform. The ESP8266 controller, along with Firebase cloud connectivity, allowed real-time remote operation of the vehicle from a mobile or web application. The ultrasonic sensor ensured safety by stopping the robot when obstacles were detected. The prototype worked efficiently during testing and proved that agricultural tasks can be automated at a low cost, reducing the effort and risk for farmers. This system is especially useful for small and medium-scale farms where advanced machinery is not affordable. Overall, the project achieved its objectives and demonstrated that smart farming solutions can significantly improve productivity, safety, and convenience in modern agriculture.

FUTURE SCOPE

- The system can be upgraded with GPS navigation and AI for fully autonomous robot movement in farms.
- Adding solar panels can make the vehicle more energy-efficient and reduce battery dependency.
- A camera module and image processing can be included for crop monitoring, weed detection, and field analysis.
- The design can be scaled up to support larger load capacity and work in bigger agricultural fields.
- Additional sensors such as soil moisture, temperature, and humidity sensors can be used for smart irrigation and crop health monitoring.

REFERENCES

Books:

1. M. Tim Jones, Arduino and IoT Development for Beginners, 2nd ed., New York: Apress, 2021.
2. A. K. Saha, Fundamentals of Agriculture Engineering, 6th ed., New Delhi: Jain Brothers, 2019.

Journal Articles:

3. V. P. Raskar and S. B. Patil, "Smart farming system using IoT for field monitoring and automation, "International Journal of Advanced Research in Computer Engineering & Technology, vol.7,no.5,pp.123-128,May 2018.
4. K. M. Sudha et al., "Design of multipurpose agricultural robot using IoT," International Journal of Scientific Research & Engineering Trends, vol. 6, no. 2, pp. 245–251, Apr. 2020.

Conference Papers:

5. S. Sharma and R. Mehta, "IoT based agricultural automation for smart farming," in IEEE International Conference on Internet of Things, Bengaluru, India, 2022, pp.54–59.
6. A. Gupta et al., "Development of low-cost farm robot for pesticide spraying," in Proc. National Conf. Robotics and Automation, Pune, India, 2021, pp. 142–147

Websites:

7. Espress if Systems. (2023). ESP32 Technical Specifications [Online]. Available: https://www.espressif.com
8. Google Firebase. (2023). Firebase Realtime Database Over view [Online]. Available: https://firebase.google.com

APPENDIX A
DATASHEET

Datasheet On ESP8266

Section	Description
Processor	32-bit Tensilica L106, 80–160 MHz
Memory	4 MB Flash, 128 KB RAM
Wireless Connectivity	Wi-Fi 802.11 b/g/n
GPIO Pins	17 GPIO pins
Communication	UART, SPI, I2C
Operating Voltage	3.3 V
Power Consumption	Low power sleep modes
Operating Temperature	-40°C to 85°C

Datasheet on L293D Motor Driver IC

Section	Description
Driver Type	Dual H-Bridge Motor Driver
Operating Voltage	4.5V – 36 V
Logic Voltage	5 V
Output Current	600mA

Datasheet on HC-SR04 Ultrasonic Sensor

Section	Description
Operating Voltage	5V
Operating Current	15 mA
Measuring Range	2 cm – 400 cm
Accuracy	±3 mm
Frequency	40 kHz
Interface Pins	VCC, Trig, Echo, GND
Measuring Angle	15°
Response Time	< 38 ms

APPENDIX B
SOURCE CODE

Initialization Phase:

cpp

```
void setup() {
// Serial communication for debugging
Serial.begin(115200);
// GPIO pin configurations
pinMode(motorPins, OUTPUT); pinMode(relayPins, OUTPUT); pinMode(TRIG_PIN,
OUTPUT); pinMode(ECHO_PIN, INPUT);
// Servo initialization
seedServo.attach(SERVO_PIN); seedServo.write(0);
// Wi-Fi connection
connectWiFi();
// Firebase initialization
initializeFirebase();
// Initial safe state
stopMotors();
allRelaysOff(); }
```

Main Execution Loop:

cpp

```
void loop() {
// Check obstacle status
checkObstacle();
if (!obstacleDetected) {
if (Firebase.getString(firebaseData, "/Pesticide/direction"))
{Stringdirection = firebaseData.stringData(); executeMovement(direction);
}
if (Firebase.getInt(firebaseData, "/Pesticide/Relay")) { intrelayValue = firebaseData.intData();
executeRelay(relayValue); updateServo(relayValue);
} } delay(100); // Loop delay for stability }
```

Firebase Communication Functions

Wi-Fi Connection:

cpp

```
void connectWiFi() { WiFi.begin(WIFI_SSID, WIFI_PASSWORD);
while (WiFi.status() != WL_CONNECTED) { delay(500);
Serial.print("."); }
Serial.println("WiFi Connected"); }
```

Firebase Initialization:

cpp

```
void initializeFirebase()
 { Firebase.begin(FIREBASE_HOST, FIREBASE_AUTH);
Firebase.reconnectWiFi(true);
Firebase.setReadTimeout(firebaseData, 1000 * 60);
Firebase.setwriteSizeLimit(firebaseData, "tiny");
}
```

Data Stream Handling:

cpp

```
void setupFirebaseStream() {
if (!Firebase.beginStream(firebaseData, "/Pesticide"))
 { Serial.println("Stream begin failed");
 Serial.println(firebaseData.errorReason());
} }
void handleStreamData()
{
if (Firebase.readStream(firebaseData))
{
if (firebaseData.dataType() == "int" || firebaseData.dataType() == "string")
 {
processCommand(firebaseData.streamPath(),
firebaseData.dataType()); }
} }
```

For Web Application (JavaScript):

javascript

```
// Firebase initialization
const firebaseConfig = { apiKey: "YOUR_API_KEY",
authDomain: "your-project.firebaseapp.com"
, databaseURL: "https://your-project.firebaseio.com",
projectId: "your-project-id" };
firebase.initializeApp(firebaseConfig);
const database = firebase.database();
// Send direction command
function sendDirection(dir)
{
database.ref('/Pesticide/direction').set(dir);
}
// Send relay command
function selectImplement(relayNum)
{
database.ref('/Pesticide/Relay').set(relayNum);
}
// Monitor obstacle status
database.ref('/Pesticide/Obstcale').
on('value', (snapshot) =>{ constobstacleStatus = snapshot.val();
updateObstacleUI(obstacleStatus)});
```

For Mobile Application (Flutter):

dart

```
// Firebase initialization
final databaseRef= FirebaseDatabase.instance.ref();
// Send direction command
void sendDirection(String direction) { databaseRef.child('Pesticide/direction').set(direction);
}
// Send relay command
void selectImplement(int relayValue) { databaseRef.child('Pesticide/Relay').set(relayValue);
```

```
}
// Monitor obstacle status
databaseRef.child('Pesticide/Obstcale').onValue.listen((event) { finalobstacleStatus=
event.snapshot.value; updateObstacleUI(obstacleStatus);
})
```

Programming:

cpp

```
#include <Servo.h>
Servo seedServo;
void setup() {
seedServo.attach(D11); // Attach to PWM pin
seedServo.write(0); // Initial position: retracted }
void positionServo(int relayValue) { if(relayValue == 3) {
seedServo.write(90); // Seeding position }else {
seedServo.write(0); // Retracted position }
}
```

Sample Control Interface Code:

html

```
<!DOCTYPEhtml>
<html>
<head>
  <title>AgroVehicleControl</title>
  <scriptsrc="https://www.gstatic.com/firebasejs/9.0.0/firebase-app.js"></script>
  <scriptsrc="https://www.gstatic.com/firebasejs/9.0.0/firebase-database.js"></script>
</head>
<body>
  <h1>IoTAgriculturalRobotControl</h1>

  <divid="movement-control">
    <h2>Movement</h2>
    <buttononclick="sendDirection('F')">Forward</button>
    <buttononclick="sendDirection('B')">Backward</button>
    <buttononclick="sendDirection('L')">Left</button>
    <buttononclick="sendDirection('R')">Right</button>
```

```
    <buttononclick="sendDirection('S')"style="background-color:red;">STOP</button>
  </div>

  <divid="implement-control">
    <h2>ImplementSelection</h2>
    <buttononclick="selectImplement(0)">Standby</button>
    <buttononclick="selectImplement(1)">GrassCutting</button>
    <buttononclick="selectImplement(2)">Spraying</button>
    <buttononclick="selectImplement(3)">Seeding</button>
  </div

<divid="status-display">
    <h2>Status</h2>
    <p>ObstacleDetected:<spanid="obstacle-status">No</span></p>
    <p>ServoPosition:<spanid="servo-status">0°</span></p>
  </div>

  <script>
    //Firebaseconfiguration
    const firebaseConfig= {
      apiKey:"YOUR_API_K
      EY",
      databaseURL:"https://YOUR_PROJECT.firebaseio.com"
    };

    firebase.initializeApp(firebaseConfig);
    const database = firebase.database();

    function sendDirection(dir) {
      database.ref('/Pesticide/direction').set(dir);
    }

    function selectImplement(relay) {
      database.ref('/Pesticide/Relay').set(relay);
    }

    //Monitorobstaclestatus
    database.ref('/Pesticide/Obstcale').on('value',(snapshot)=>{
      conststatus = snapshot.val();
```

```
        document.getElementById('obstacle-status').textContent=status==1?"YES":"No";
        if (status == 1) {
            alert("OBSTACLEDETECTED!");
    }
});
    database.ref('/Pesticide/Servo').on('value',(snapshot)=
    >{ conststatus = snapshot.val();
        document.getElementById('servo-status').textContent=status==1?"90°":"0°";
    });
  </script>
  </body>
  </html>
```

COURSE OUTCOMES(CO):

On completion of this course, students are able to:

1) Get exposed to literature available for research challenges in interdisciplinary fields.
2) Get an insight of real world problems, challenges and related engineering issues to broader societal context.
3) Implement their idea using modern tools & new technologies.
4) Demonstrate professionalism with ethics, individual & team management and effective communication skills to comprehend & to write reports.

COST ESTIMATION:

Sl.No.	Components	Quantity	Cost
1	ESP8266	1	400
2	Motor Driver	1	350
3	Drive Motors	4	2,000
4	Grass Cutter Motor	1	800
5	Pesticide Pump	1	400
6	Seeding Servo Motor	1	550
7	Relay Module	1	450
8	Ultrasonic Sensor	1	150
9	Power Supply	1	2800
10	Chassis & Wheels	1	2500
11	Miscellaneous	1	1500
			TOTAL = 8900

CONTACT DETAILS

1. Name: Krutika S K **USN:** 4BD22EC050 **Email id:**krutikakanade2@gmail.com **Phone No:**7349488973 **Address:** Mahalaxmi layout mundgod(Uttara kannada) -581349	
2. **Name:** Laxmi S Patil **USN:** 4BD22EC052 **Email id:**laxmisantosh2115@gmail.com **Phone No:**9008446177 **Address:** Mudhol(Tq),Bagalkot(Dist)587313	
3. Name: Sanmatikumar P B **USN:** 4BD22EC082 **Email id:**sanmatibhosage0006@gmail.com **Phone No:** 8050237108 **Address:** Shedbal ,Kagawad(Tq), Belagavi-591315	
4. Name: Somashekhar J **USN:** 4BD22EC096 **Email id:** somashekharjavooru@gmail.com **Phone no:** 8971941346 **Address:** Narakaladinni , Lingasugur (Tq), Raichur(Dist)584127	