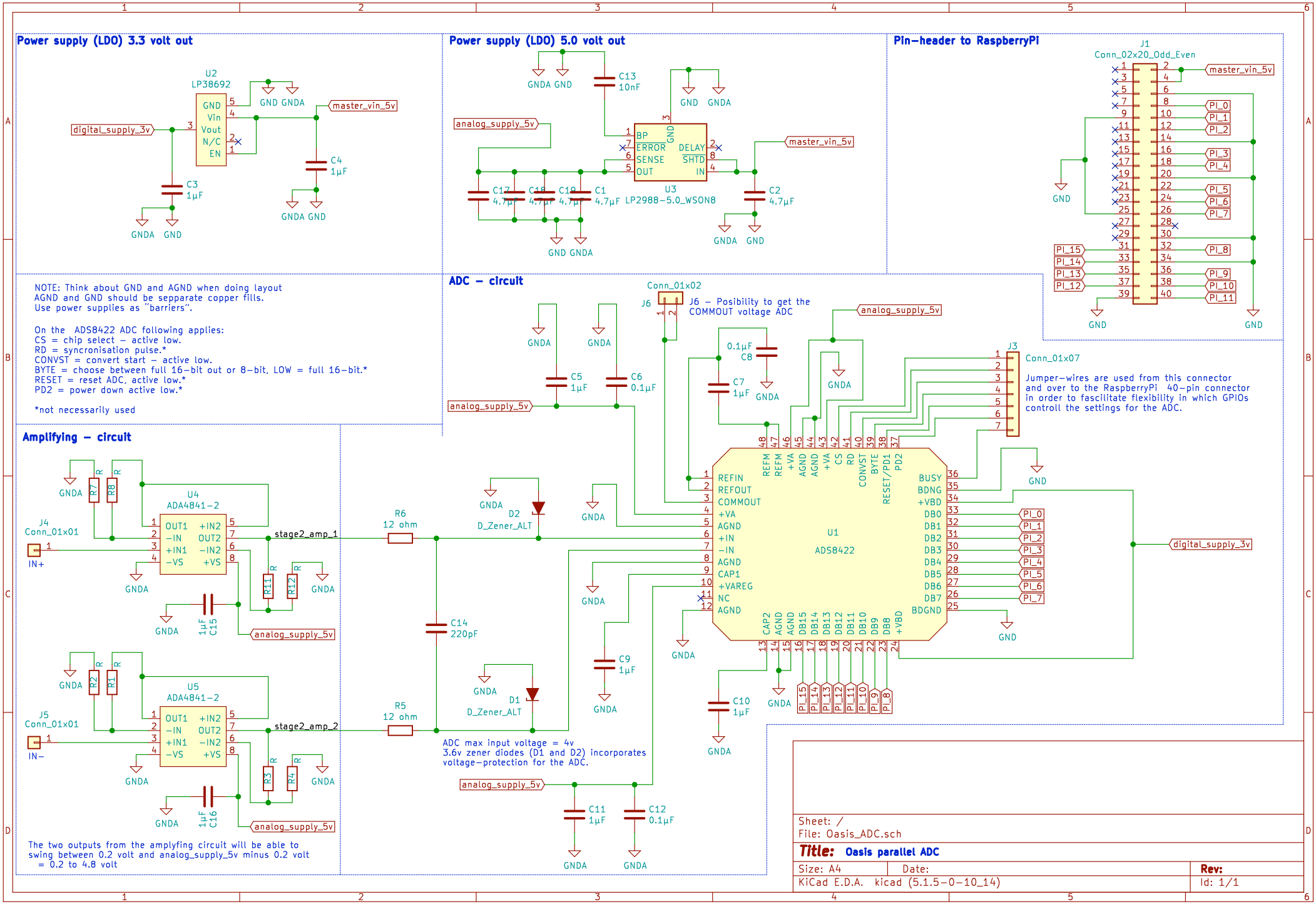
Power supply (LDO) 3.3 volt out
U2
LP38692
GND
Vin
Vout
N/C
EN
digital_supply_3v
master_vin_5v
C3
1µF
C4
1µF
GND GNDA
GNDA GND
Power supply (LDO) 5.0 volt out
C13
10nF
analog_supply_5v
BP
ERROR
SENSE
OUT
DELAY
SHTD
IN
U3
LP2988-5.0_WSON8
C17
4.7µF
C18
4.7µF
C19
4.7µF
C1
4.7µF
C2
4.7µF
Pin-header to RaspberryPi
J1
Conn_02x20_Odd_Even
PI_0
PI_1
PI_2
PI_3
PI_4
PI_5
PI_6
PI_7
PI_8
PI_9
PI_10
PI_11
PI_12
PI_13
PI_14
PI_15
NOTE: Think about GND and AGND when doing layout
AGND and GND should be sepparate copper fills.
Use power supplies as "barriers".
On the ADS8422 ADC following applies:
CS = chip select - active low.
RD = syncronisation pulse.*
CONVST = convert start - active low.
BYTE = choose between full 16-bit out or 8-bit, LOW = full 16-bit.*
RESET = reset ADC, active low.*
PD2 = power down active low.*
*not necessarily used
ADC - circuit
Conn_01x02
J6
J6 - Posibility to get the
COMMOUT voltage ADC
C5
1µF
C6
0.1µF
C8
0.1µF
C7
1µF
J3
Conn_01x07
Jumper-wires are used from this connector
and over to the RaspberryPi 40-pin connector
in order to fascilitate flexibility in which GPIOs
controll the settings for the ADC.
REFIN
REFOUT
COMMOUT
+VA
AGND
+IN
-IN
CAP1
+VAREG
NC
BUSY
BDNG
+VBD
DB0
DB1
DB2
DB3
DB4
DB5
DB6
DB7
BDGND
U1
ADS8422
digital_supply_3v
Amplifying - circuit
U4
ADA4841-2
OUT1
-IN
+IN1
-VS
+IN2
OUT2
-IN2
+VS
J4
Conn_01x01
IN+
R7
R8
R11
R12
C15
1µF
stage2_amp_1
R6
12 ohm
D2
D_Zener_ALT
C14
220pF
U5
ADA4841-2
J5
Conn_01x01
IN-
R2
R1
R3
R4
C16
1µF
stage2_amp_2
R5
12 ohm
D1
D_Zener_ALT
C9
1µF
C10
1µF
ADC max input voltage = 4v
3.6v zener diodes (D1 and D2) incorporates
voltage-protection for the ADC.
C11
1µF
C12
0.1µF
The two outputs from the amplyfing circuit will be able to
swing between 0.2 volt and analog_supply_5v minus 0.2 volt
= 0.2 to 4.8 volt
Sheet: /
File: Oasis_ADC.sch
Title: Oasis parallel ADC
Size: A4
Date:
Rev:
KiCad E.D.A. kicad (5.1.5-0-10_14)
Id: 1/1