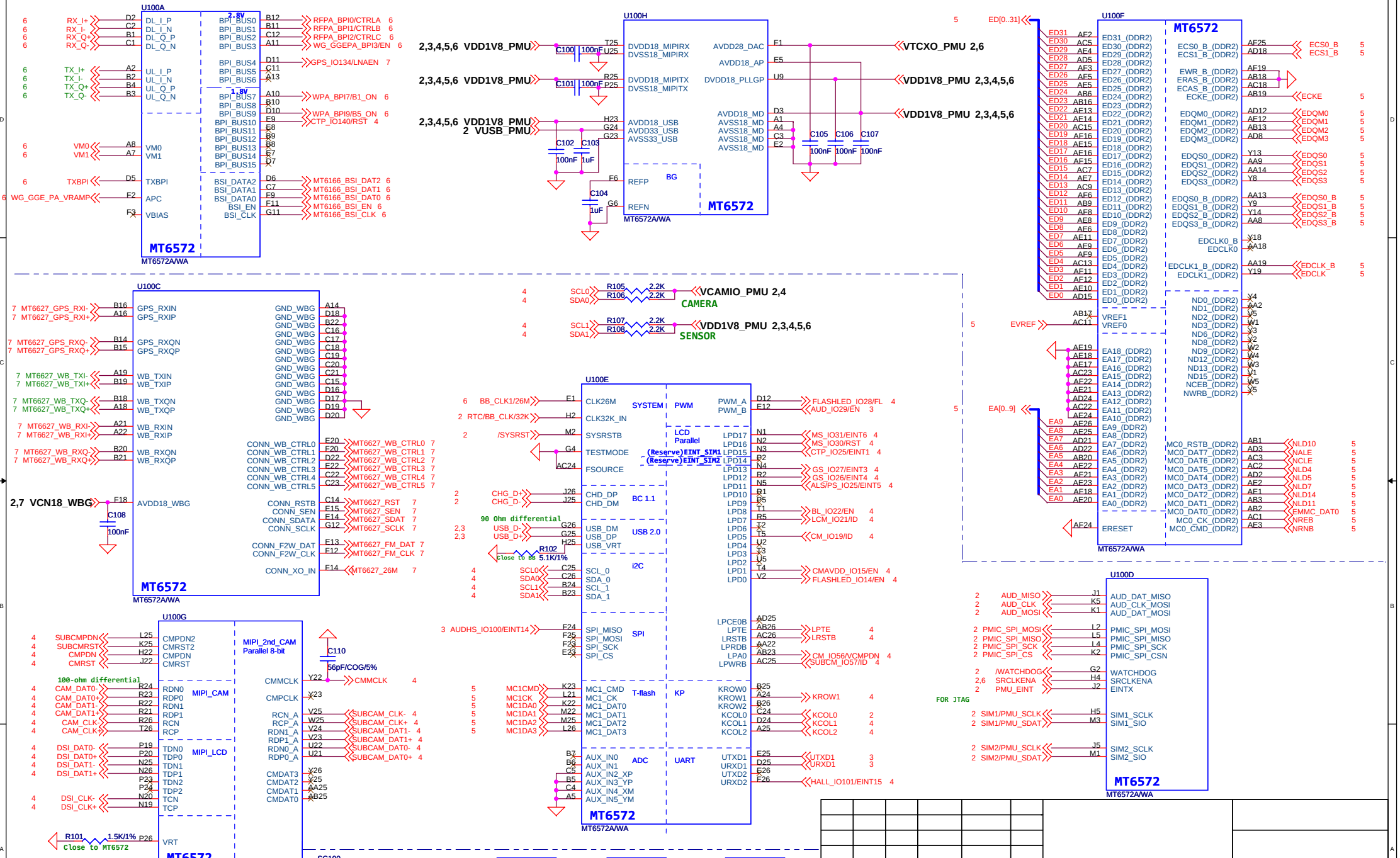
U100A
MT6572
MT6572A/WA
U100H
MT6572
MT6572A/WA
U100F
MT6572
MT6572A/WA
U100C
MT6572
MT6572A/WA
U100E
MT6572
MT6572A/WA
U100D
MT6572
MT6572A/WA
U100G
MT6572
MT6572A/WA
SC100
2,3,4,5,6 VDD1V8_PMU
2 VUSB_PMU
VTCXO_PMU 2,6
VDD1V8_PMU 2,3,4,5,6
VCAMIO_PMU 2,4
CAMERA
SENSOR
2,7 VCN18_WBG
100-ohm differential
90 Ohm differential
Close to BB
Close to MT6572
FOR JTAG
V1.1_M02_P1/P6_140128_hxj
增加屏蔽罩夹子
阻断背光驱动IC对其他VBAT网络的干扰

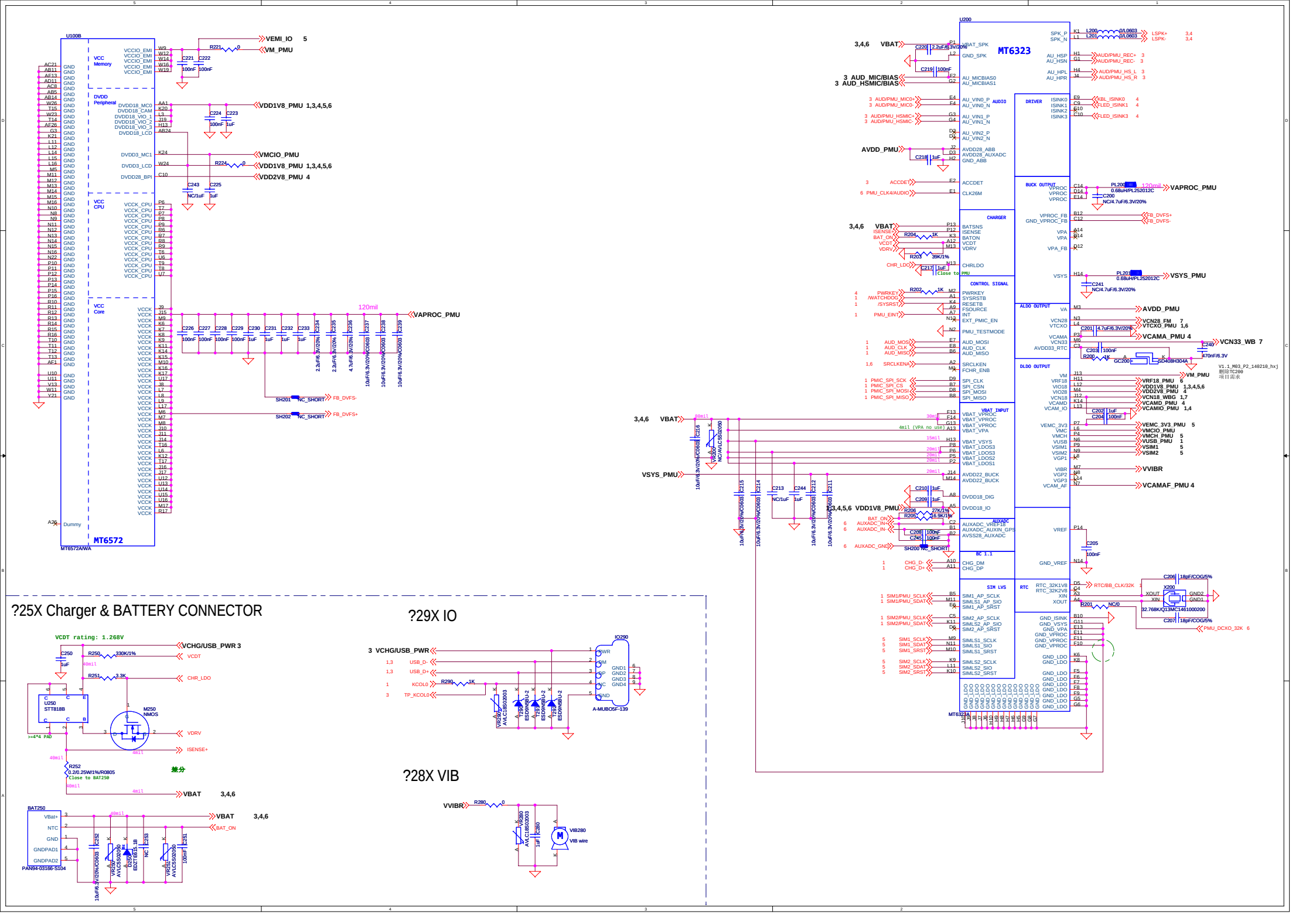
U100B
MT6572
MT6572AWA
VCC Memory
DVDD Peripheral
VCC CPU
VCC Core
VEMI_IO 5
VM_PMU
VDD1V8_PMU 1,3,4,5,6
VMCIO_PMU
VDD1V8_PMU 1,3,4,5,6
VDD2V8_PMU 4
VAPROC_PMU
FB_DVFS-
FB_DVFS+
U200
MT6323
3,4,6 VBAT
3 AUD_MIC/BIAS
3 AUD_HSMIC/BIAS
AVDD_PMU
VAPROC_PMU
VSYS_PMU
AVDD_PMU
VCN28_FM 7
VTCXO_PMU 1,6
VCAMA_PMU 4
VCN33_WB 7
VM_PMU
VRF18_PMU 6
VDD1V8_PMU 1,3,4,5,6
VDD2V8_PMU 4
VCN18_WBG 1,7
VCAMD_PMU 4
VCAMIO_PMU 1,4
VEMC_3V3_PMU 5
VMCIO_PMU
VMCH_PMU 5
VUSB_PMU 1
VSIM1 5
VSIM2 5
VVIBR
VCAMAF_PMU 4
3,4,5,6 VDD1V8_PMU
RTC/BB_CLK/32K
PMU_DCXO_32K 6
?25X Charger & BATTERY CONNECTOR
VCDT rating: 1.268V
VCHG/USB_PWR 3
VCDT
CHR_LDO
VDRV
ISENSE+
VBAT 3,4,6
BAT_ON
BAT250
PAN54-03166-S104
?29X IO
3 VCHG/USB_PWR
USB_D-
USB_D+
KCOL0
TP_KCOL0
IO290
A-MUBO5F-139
?28X VIB
VVIBR
VIB280
VIB wire

?30X SPK

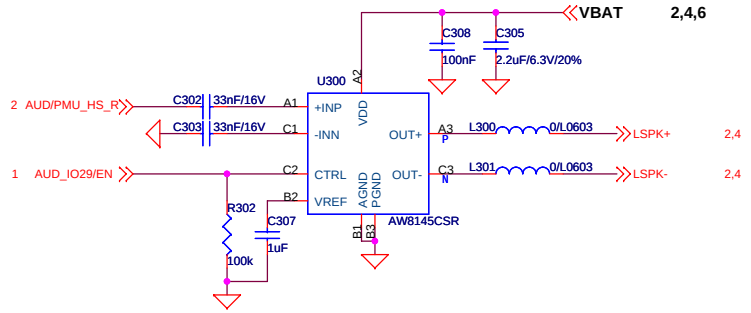

?33X HANDSET RECEIVER

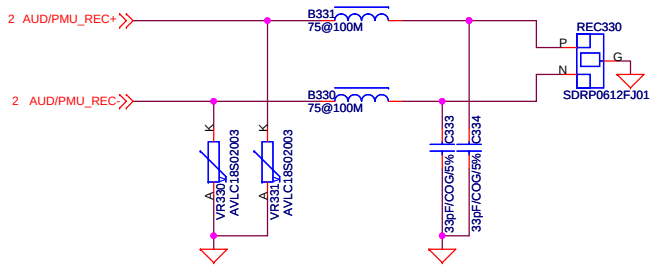

?34X HANDSET MIC

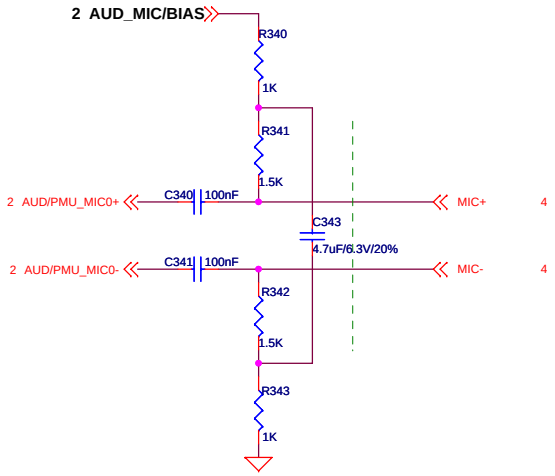

?36X Earphone MIC

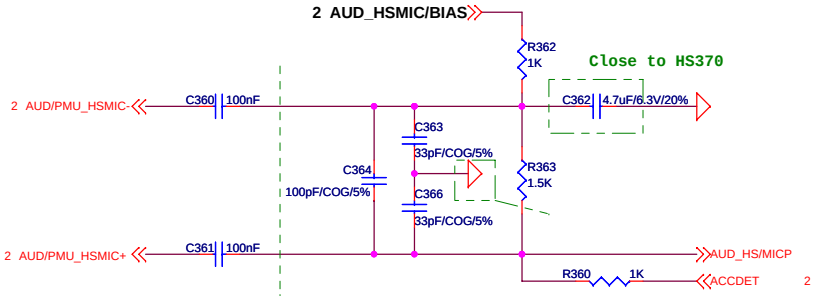

?37X Earphone RECEIVER

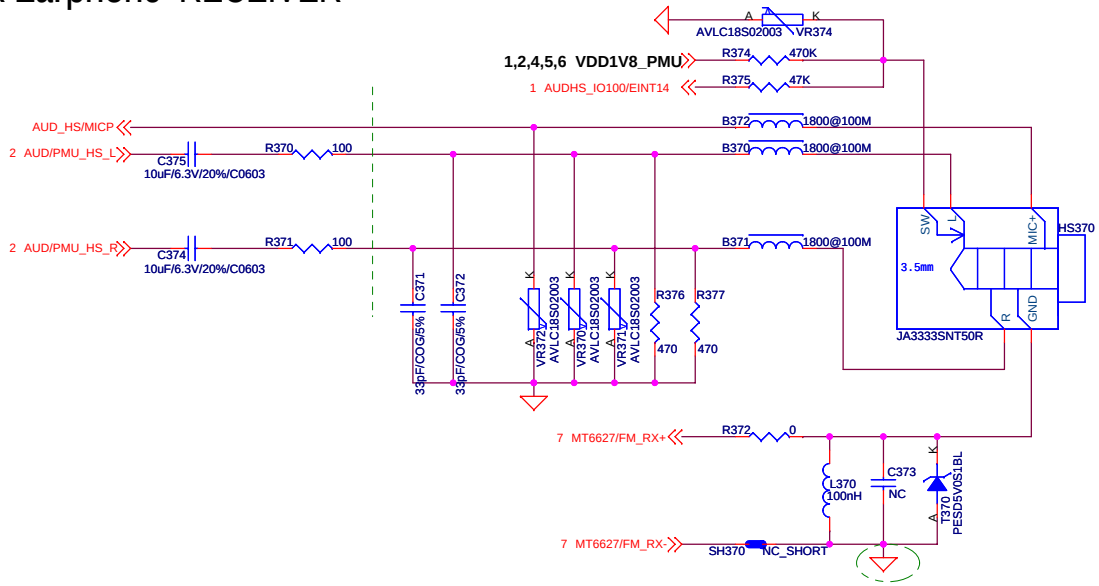

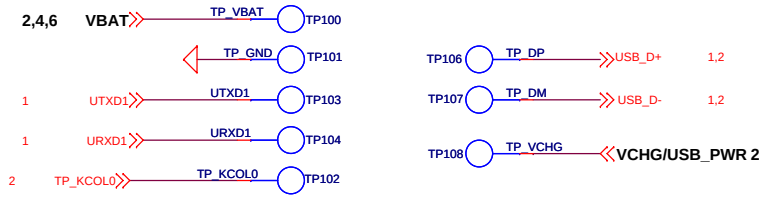

?40X~419 LCM

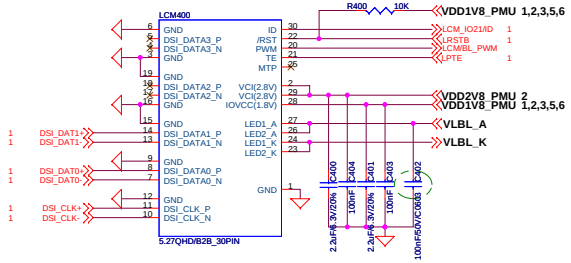

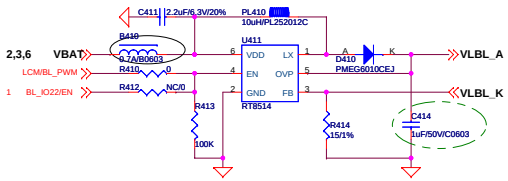

?42X~429 CTP

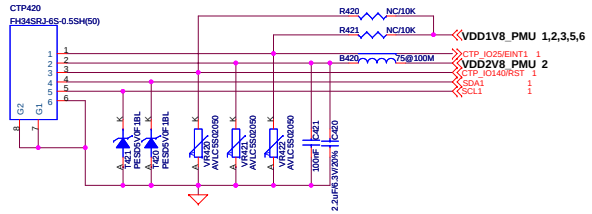

?43X 音量侧键

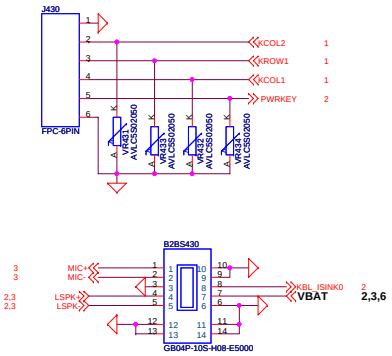

?75X GSENSOR

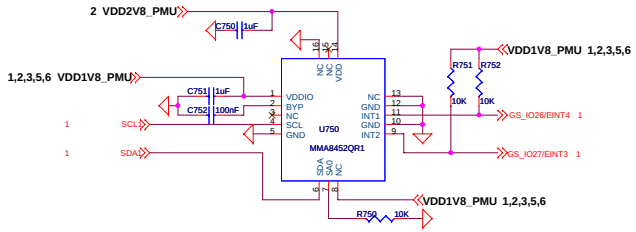

?45X~49X CAMERA

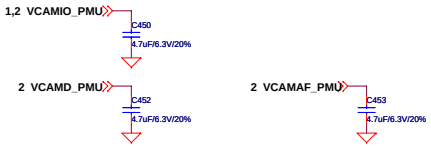

后置摄像头

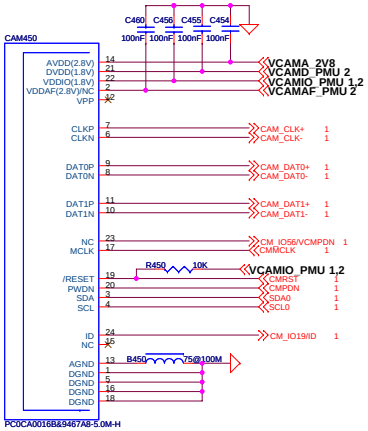

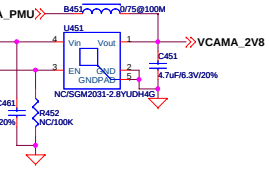

?44X 闪光灯

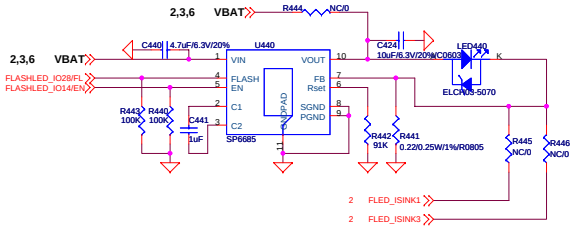

前置CAMERA & LightSensor

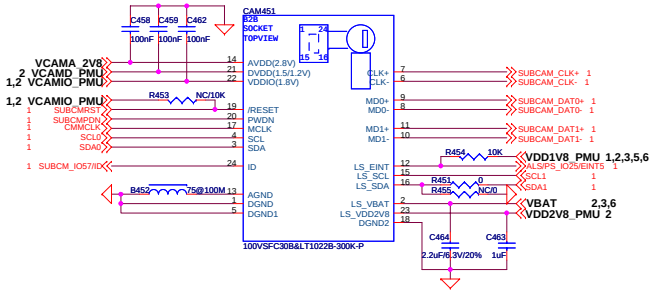

?76X M-Sensor

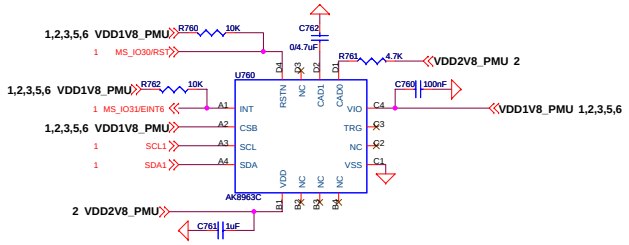

?79X HALL

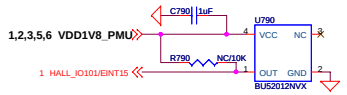

?500~52X MCP

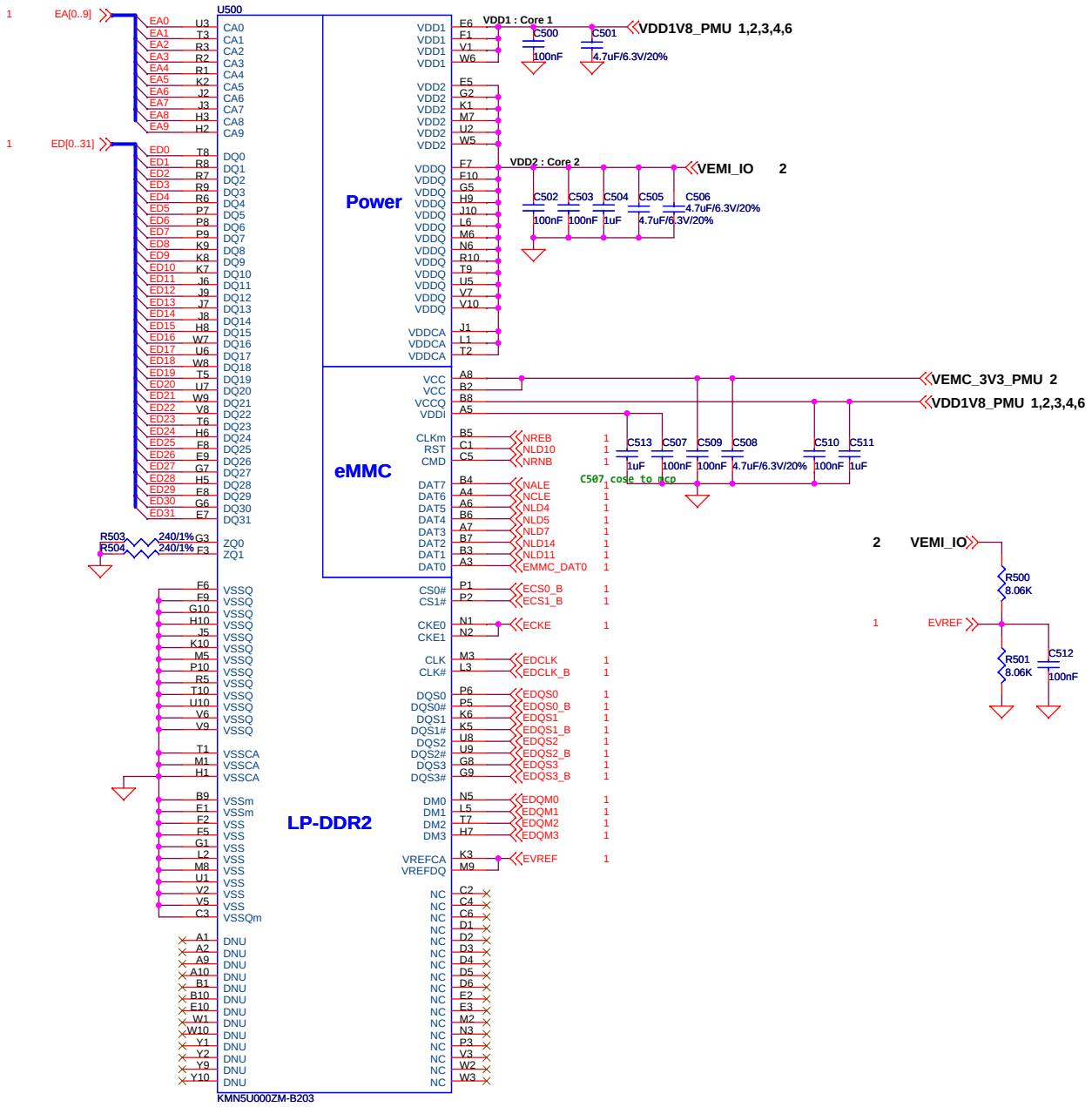

?53X TF

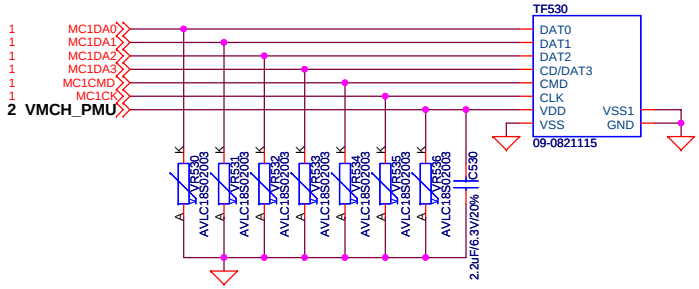

?56X SIM

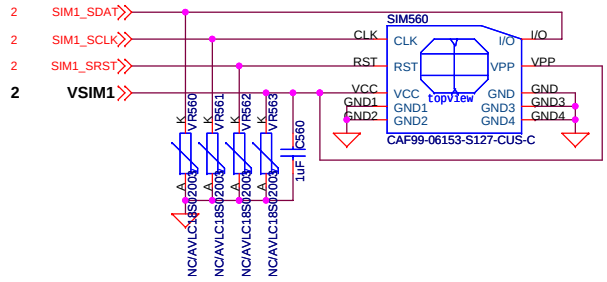

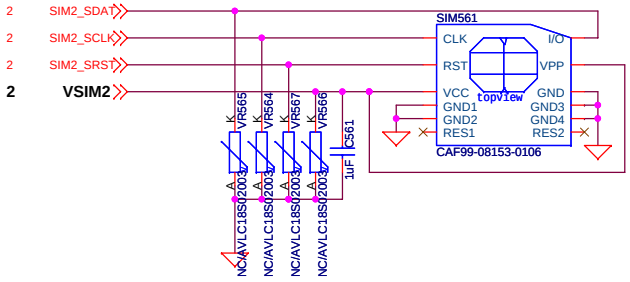

?600~?634 MT6166

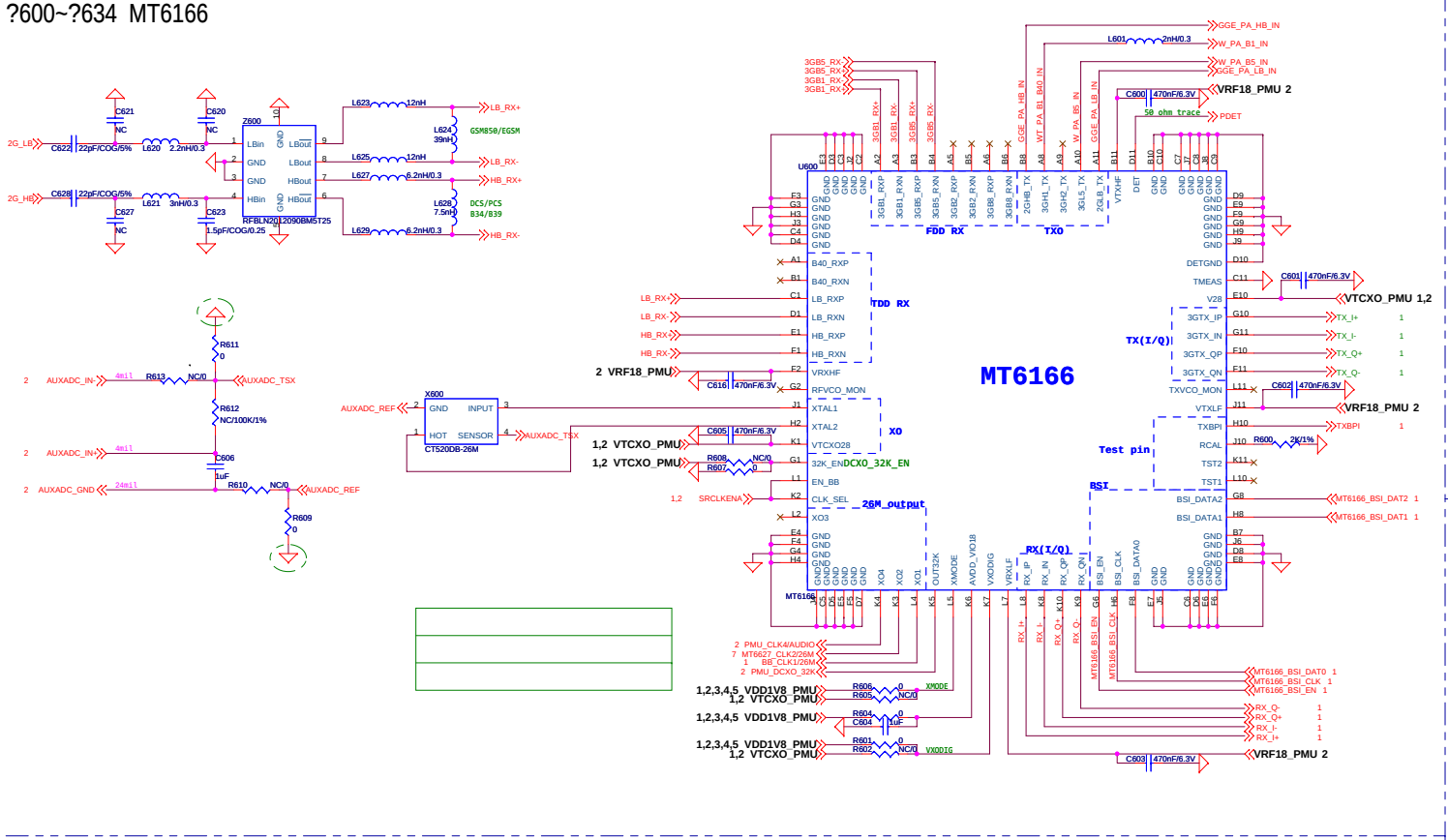

?665~?674 3GW B1 PA

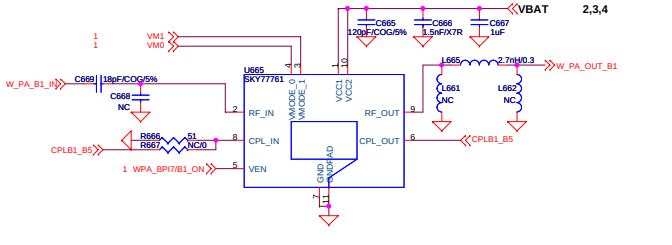

?675~?684 3GW B5 PA

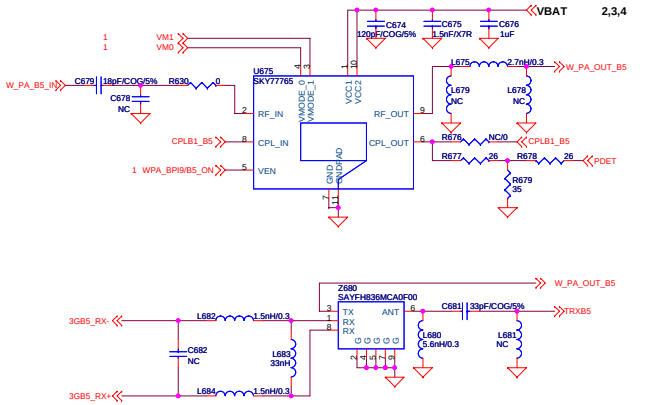

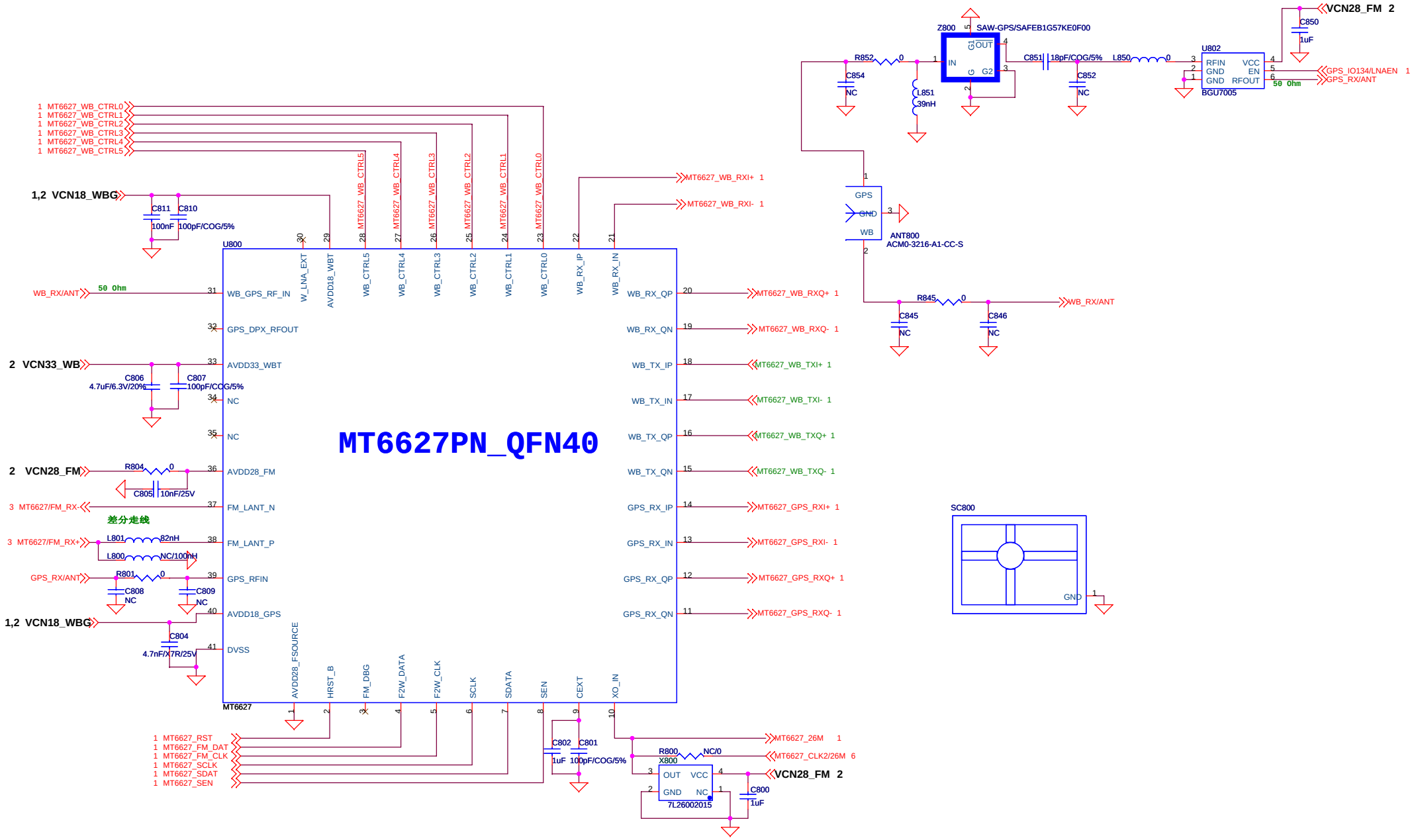
MT6627PN_QFN40
U800
MT6627
1,2 VCN18_WBG
2 VCN33_WB
2 VCN28_FM
3 MT6627/FM_RX-
3 MT6627/FM_RX+
GPS_RX/ANT
WB_RX/ANT
50 Ohm
差分走线
1 MT6627_WB_CTRL0
1 MT6627_WB_CTRL1
1 MT6627_WB_CTRL2
1 MT6627_WB_CTRL3
1 MT6627_WB_CTRL4
1 MT6627_WB_CTRL5
1 MT6627_RST
1 MT6627_FM_DAT
1 MT6627_FM_CLK
1 MT6627_SCLK
1 MT6627_SDAT
1 MT6627_SEN
MT6627_WB_RXI+ 1
MT6627_WB_RXI- 1
MT6627_WB_RXQ+ 1
MT6627_WB_RXQ- 1
MT6627_WB_TXI+ 1
MT6627_WB_TXI- 1
MT6627_WB_TXQ+ 1
MT6627_WB_TXQ- 1
MT6627_GPS_RXI+ 1
MT6627_GPS_RXI- 1
MT6627_GPS_RXQ+ 1
MT6627_GPS_RXQ- 1
MT6627_26M 1
MT6627_CLK2/26M 6
VCN28_FM 2
Z800 SAW-GPS/SAFEB1G57KE0F00
U802 BGU7005
GPS_IO134/LNAEN 1
GPS_RX/ANT
ANT800 ACM0-3216-A1-CC-S
SC800
X800 7L26002015