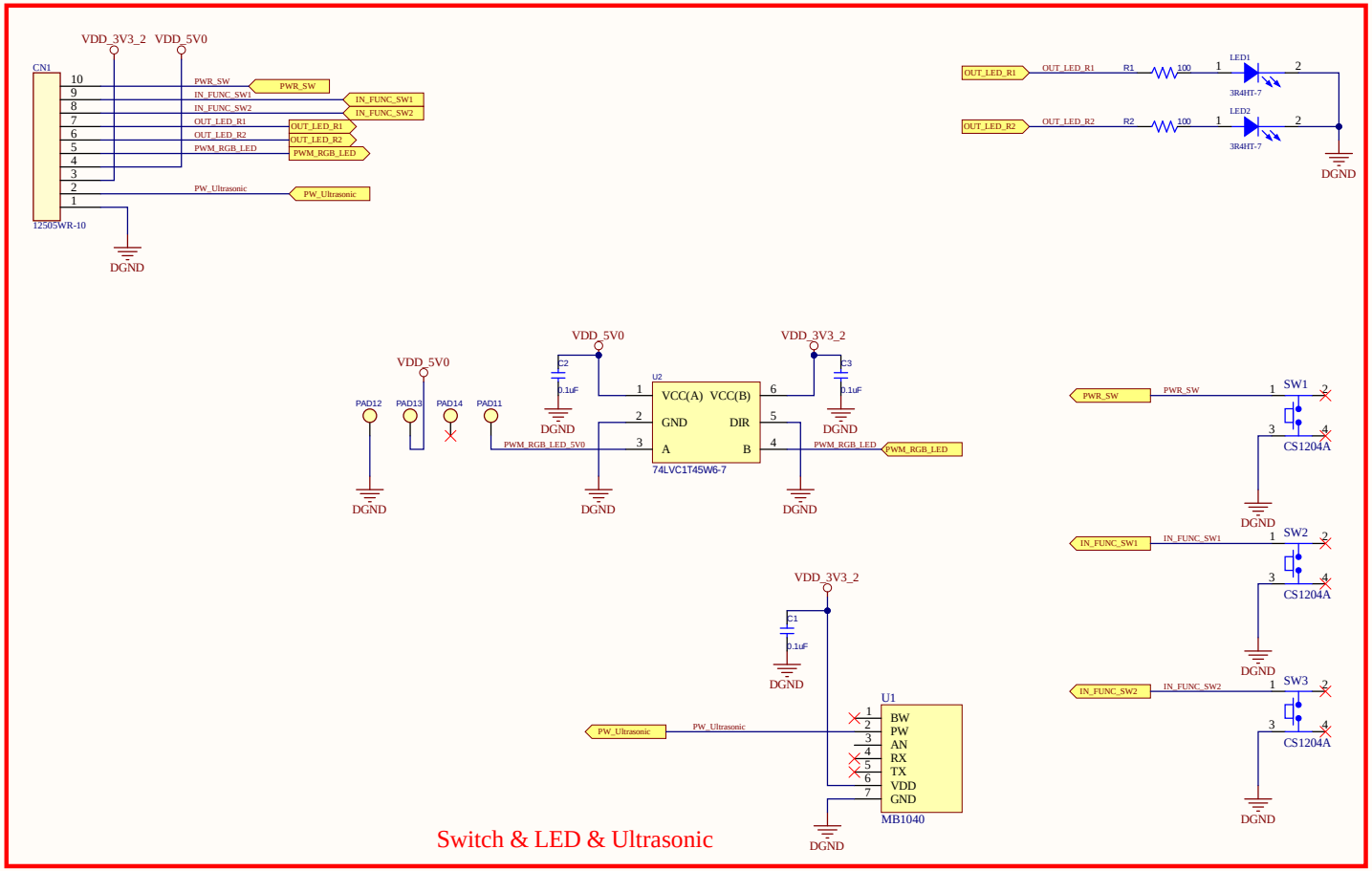

NOTE
1. Standard SMD Resistor Type : 1608(1/10W), ±1%(F)
2. Standard SMD Capacitor Type : 1608, 50V, X7R, ±10%(K))

Title	*Switch & LED & Ultrasonic*		*WITHFORCE Inc.* *816ho* *82, Anyangpangyo-ro,* *Uiwang-si, Gyeonggi-do,* *Republic of Korea*
Size: A3	Author: DW Yun	Revision: 02	
Date: 2023-08-29	Time: 오후 7:32:21	Sheet 1 of 1	
File: D:\WithForce\PCBA\REV02\WithForce_Controller_REV02\WithForce_Controller_REV02.SchDoc			

WITHFORCE