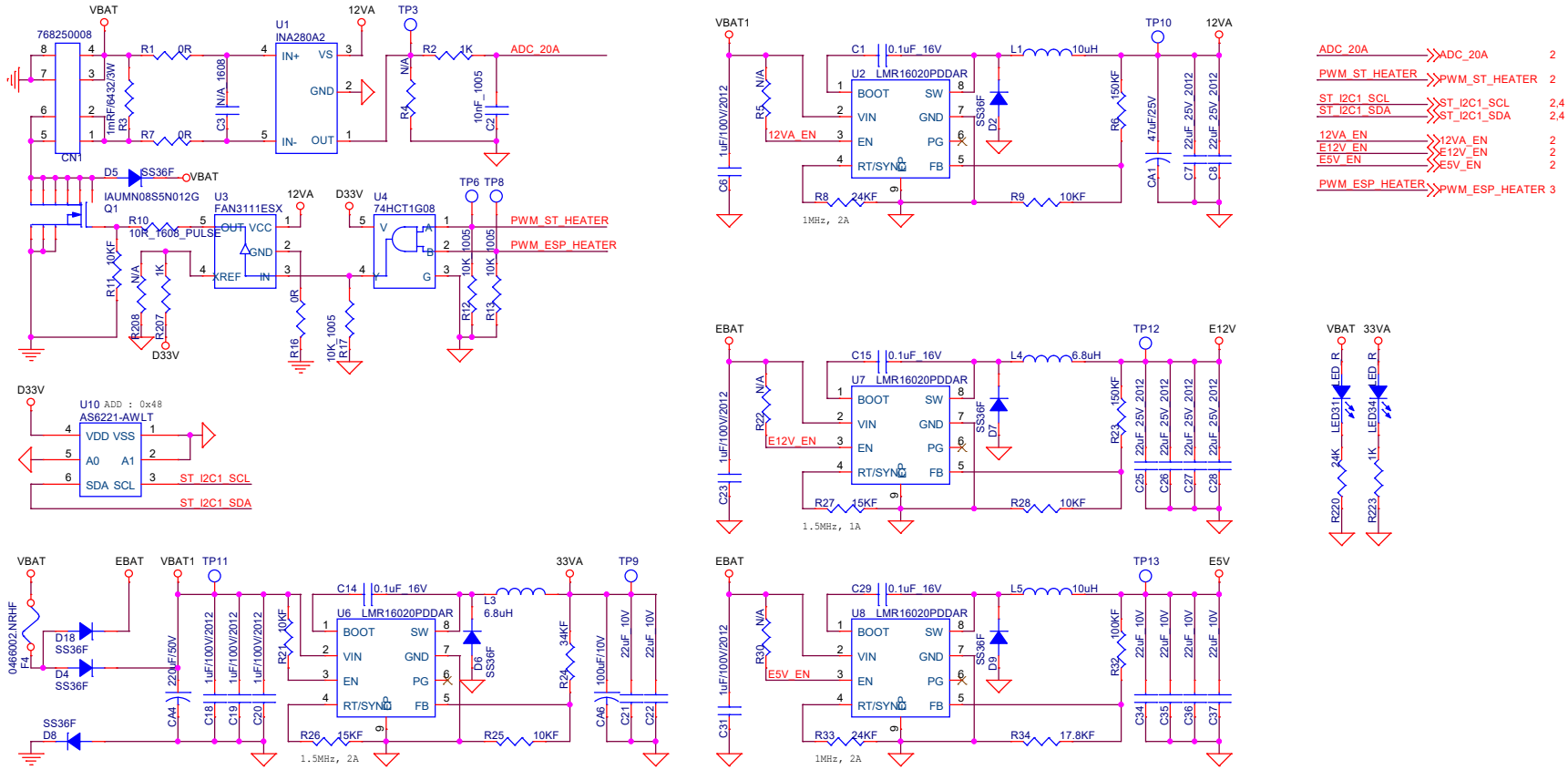

Title	<Title>
Size A3	Document Number <Doc>
Rev	<RevCode>
Date: Friday, August 22, 2025	Sheet 1 of 6

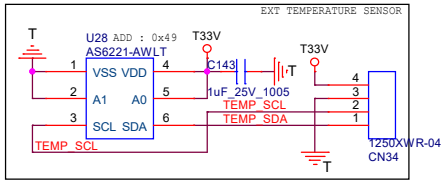

Title	<Title>		
Size A3	Document Number <Doc>		Rev <RevCode>
Date: Friday, August 01, 2025		Sheet 1 of 1	

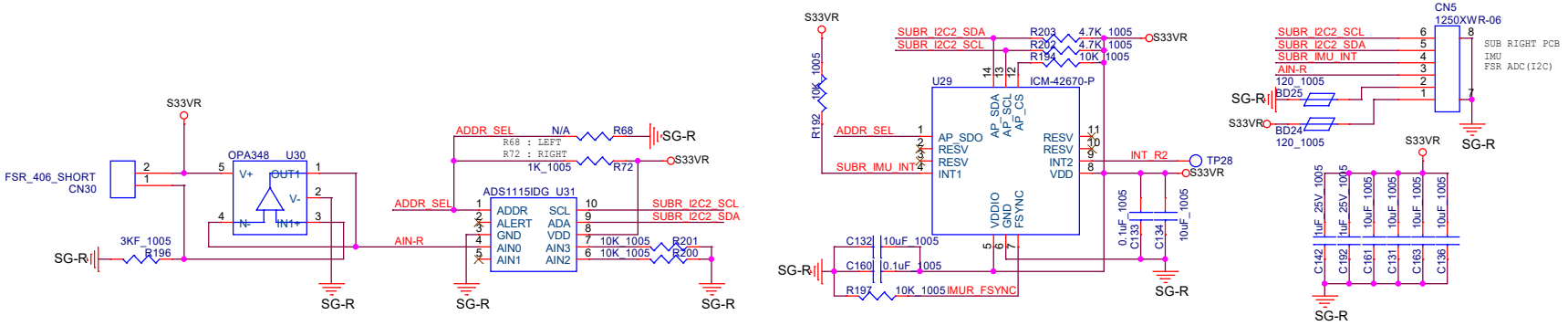

Title	<Title>		
Size A3	Document Number <Doc>		Rev <RevCode>
Date: Saturday, August 23, 2025	Sheet 1 of 1		

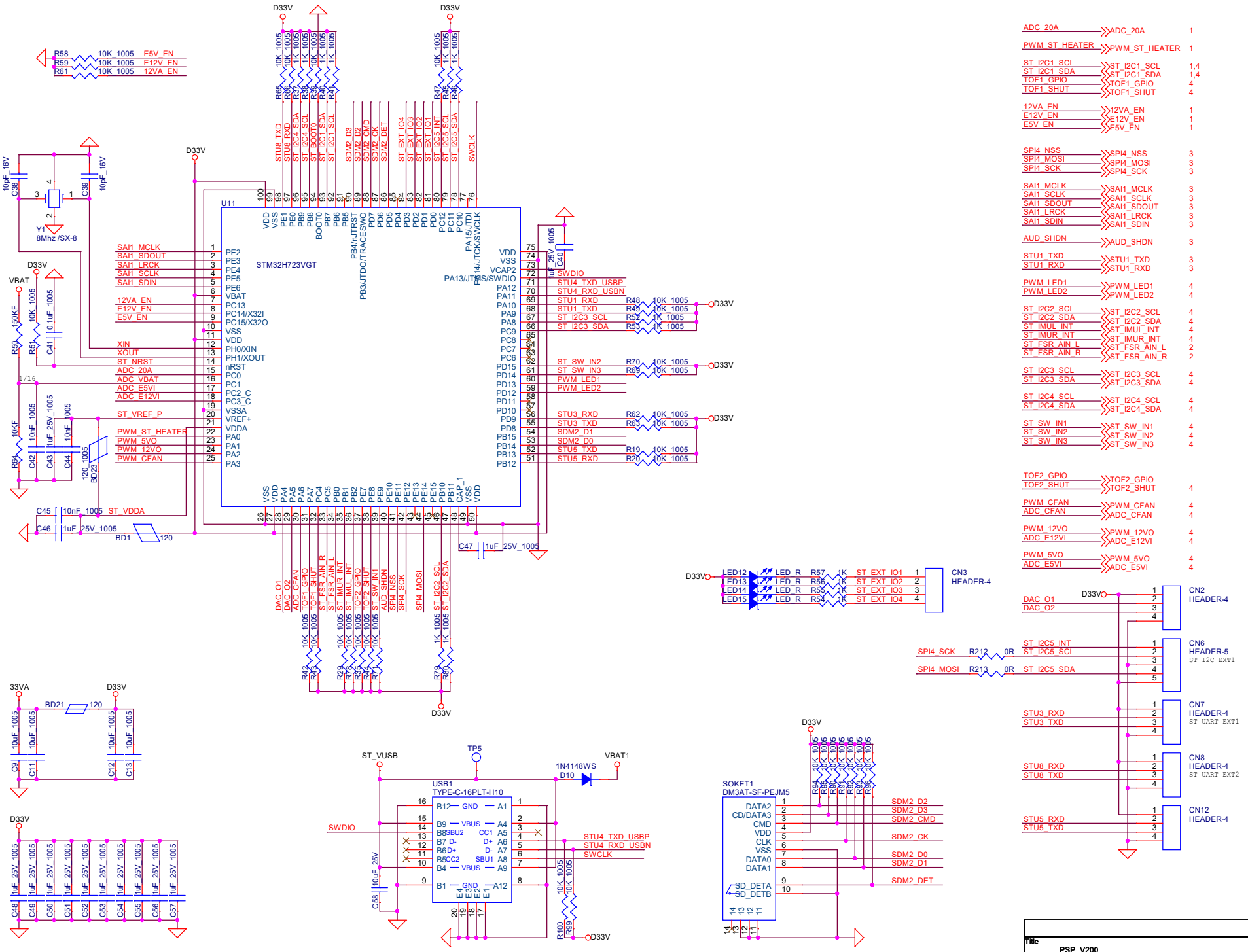
U11
STM32H723VGT
Y1
8Mhz /SX-8
D33V
VBAT
33VA
USB1
TYPE-C-16PLT-H10
SOKET1
DM3AT-SF-PEJM5
CN3
HEADER-4
CN2
HEADER-4
CN6
HEADER-5
ST I2C EXT1
CN7
HEADER-4
ST UART EXT1
CN8
HEADER-4
ST UART EXT2
CN12
HEADER-4
Title
PSP_V200
Size
A3
Document Number
2024-08-10
Rev
2.0
Date:
Friday, August 01, 2025
Sheet
2
of
6

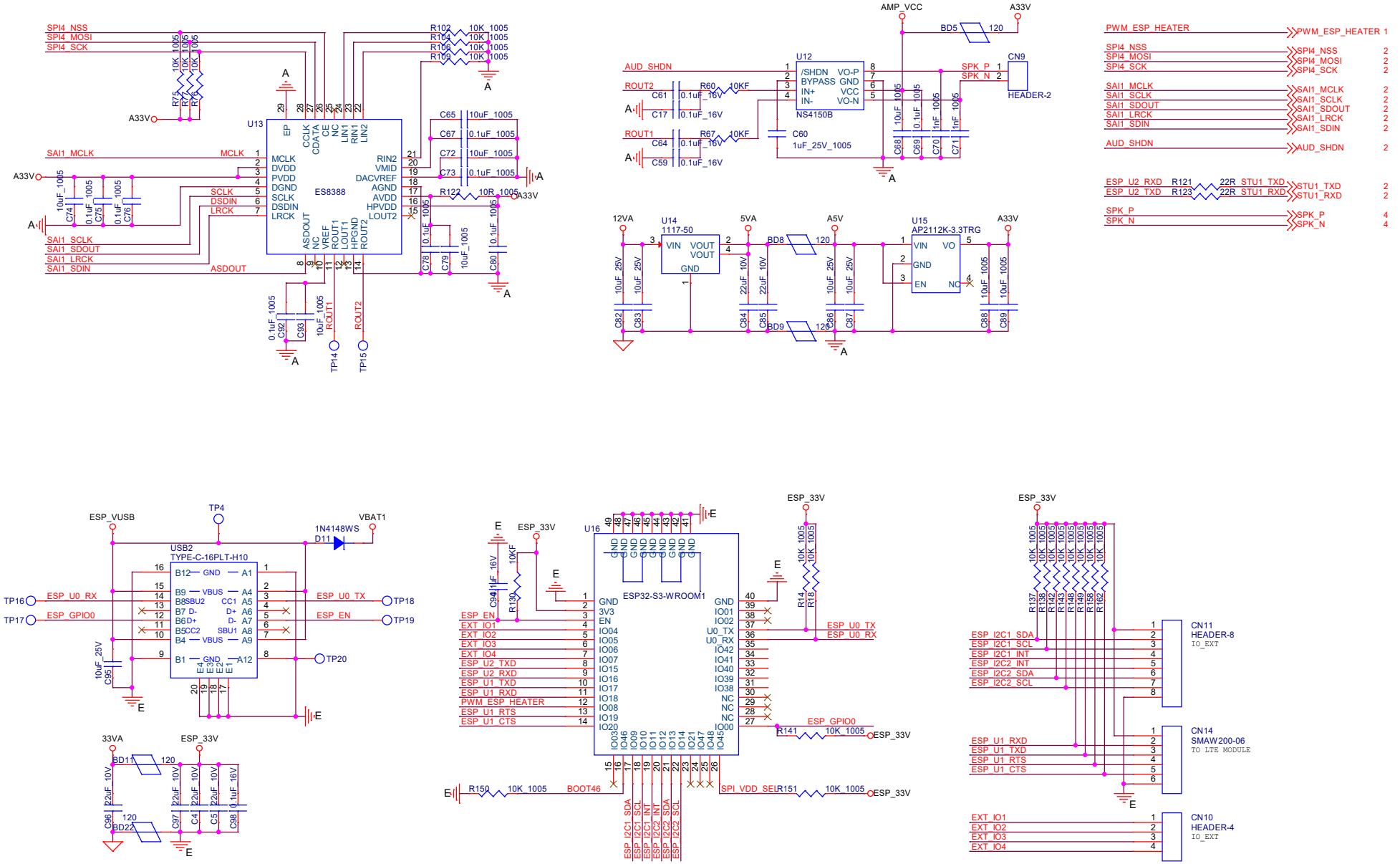

Title	<Title>
Size A3	Document Number <Doc>
Rev	<RevCode>
Date: Tuesday, August 05, 2025	Sheet 3 of 6

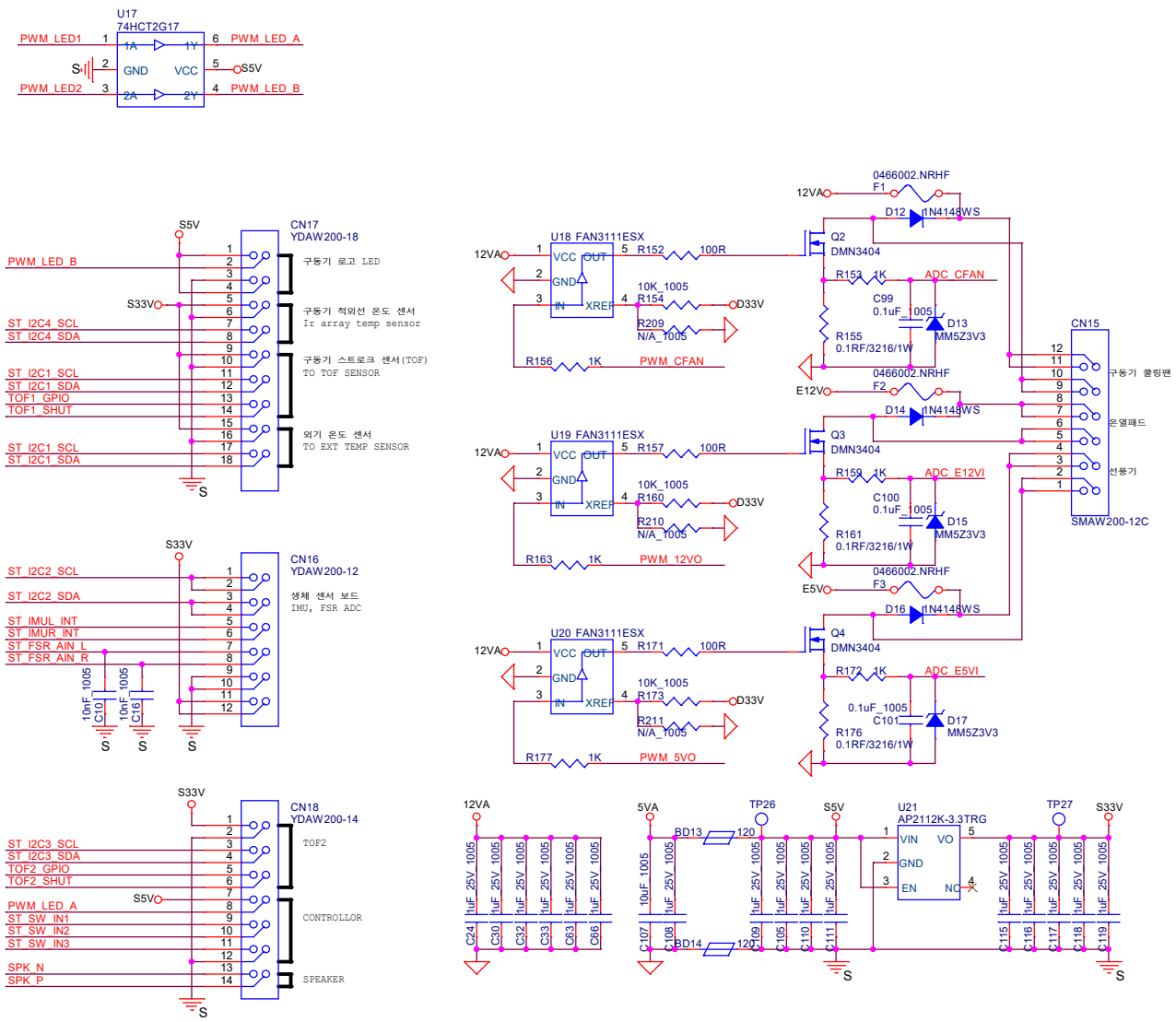

PWM_LED1	PWM_LED1	2
PWM_LED2	PWM_LED2	2
ST_I2C1_SCL	ST_I2C1_SCL	1,2
ST_I2C1_SDA	ST_I2C1_SDA	1,2
TOF1_GPIO	TOF1_GPIO	2
TOF1_SHUT	TOF1_SHUT	2
ST_I2C2_SCL	ST_I2C2_SCL	2
ST_I2C2_SDA	ST_I2C2_SDA	2
ST_IMUL_INT	ST_IMUL_INT	2
ST_IMUR_INT	ST_IMUR_INT	2
ST_FSR_AIN_L	ST_FSR_AIN_L	2
ST_FSR_AIN_R	ST_FSR_AIN_R	2
ST_I2C3_SCL	ST_I2C3_SCL	2
ST_I2C3_SDA	ST_I2C3_SDA	2
ST_I2C4_SCL	ST_I2C4_SCL	2
ST_I2C4_SDA	ST_I2C4_SDA	2
ST_SW_IN1	ST_SW_IN1	2
ST_SW_IN2	ST_SW_IN2	2
ST_SW_IN3	ST_SW_IN3	2
TOF2_GPIO	TOF2_GPIO	
TOF2_SHUT	TOF2_SHUT	2
PWM_CFAN	PWM_CFAN	2
ADC_CFAN	ADC_CFAN	2
PWM_12VO	PWM_12VO	2
ADC_E12VI	ADC_E12VI	2
PWM_5VO	PWM_5VO	2
ADC_E5VI	ADC_E5VI	2
SPK_P	SPK_P	3
SPK_N	SPK_N	3

Title	<Title>	
Size A3	Document Number <Doc>	Rev <RevCode>
Date: Friday, August 01, 2025	Sheet 4 of 6	

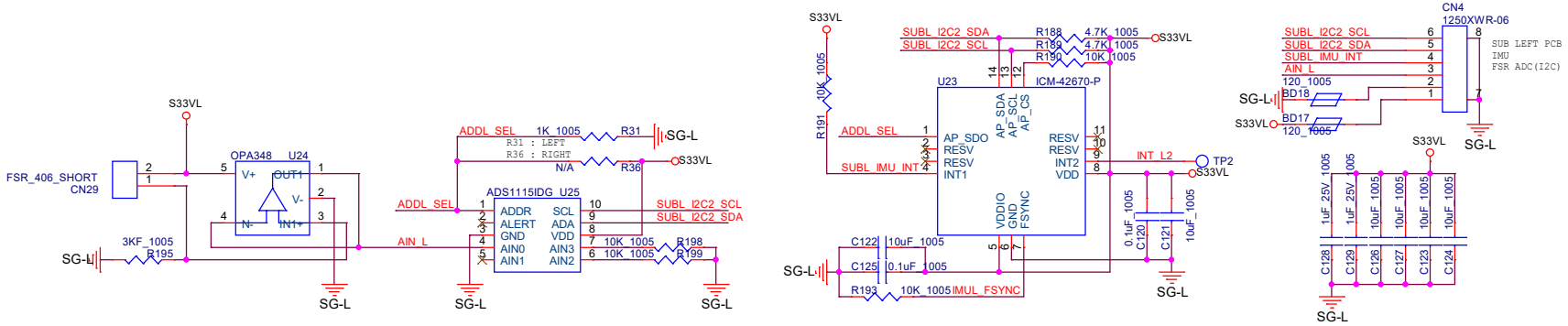

Title	<Title>
Size A3	Document Number <Doc>
Rev	<RevCode>
Date: Saturday, August 23, 2025	Sheet 5 of 6

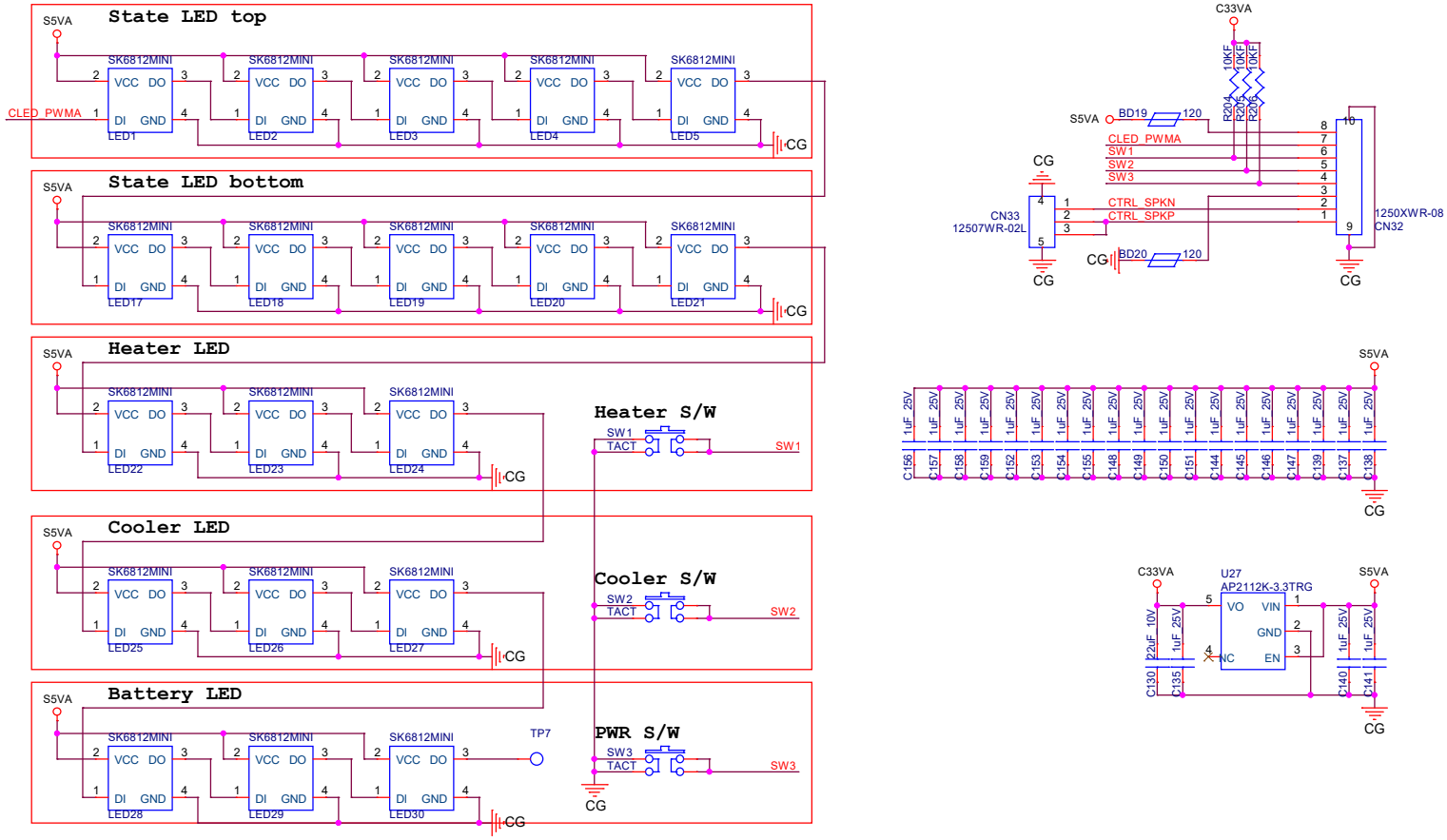

Title	PSP_V200
Size A3	Document Number <Doc>
Rev	2.0
Date:	Friday, August 01, 2025
Sheet	6 of 6