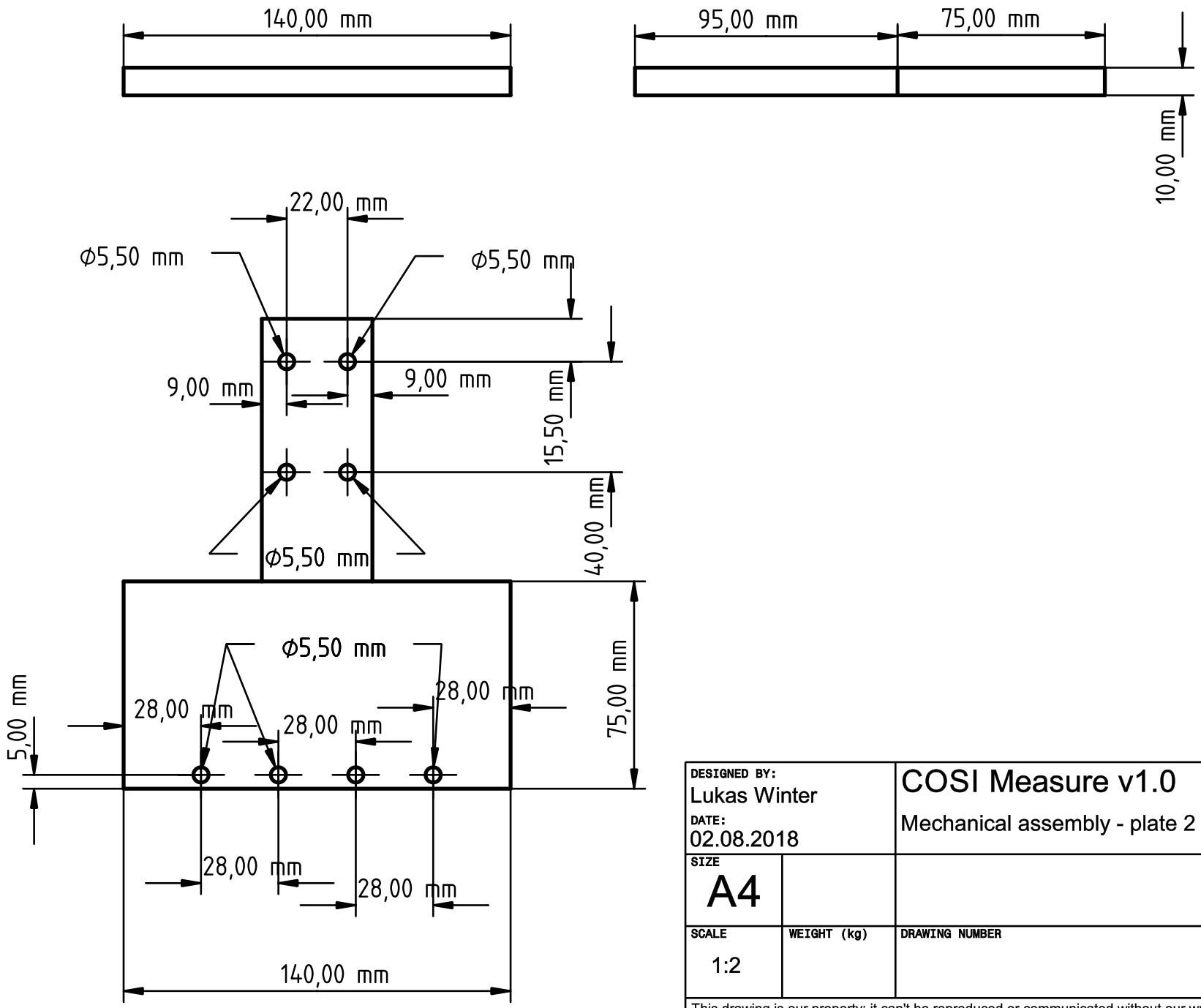

DESIGNED BY: Lukas Winter DATE: 02.08.2018	COSI Measure v1.0 Mechanical assembly - plate 2		
SIZE A4			
SCALE 1:2	WEIGHT (kg)	DRAWING NUMBER	SHEET 1/1

This drawing is our property; it can't be reproduced or communicated without our written consent.