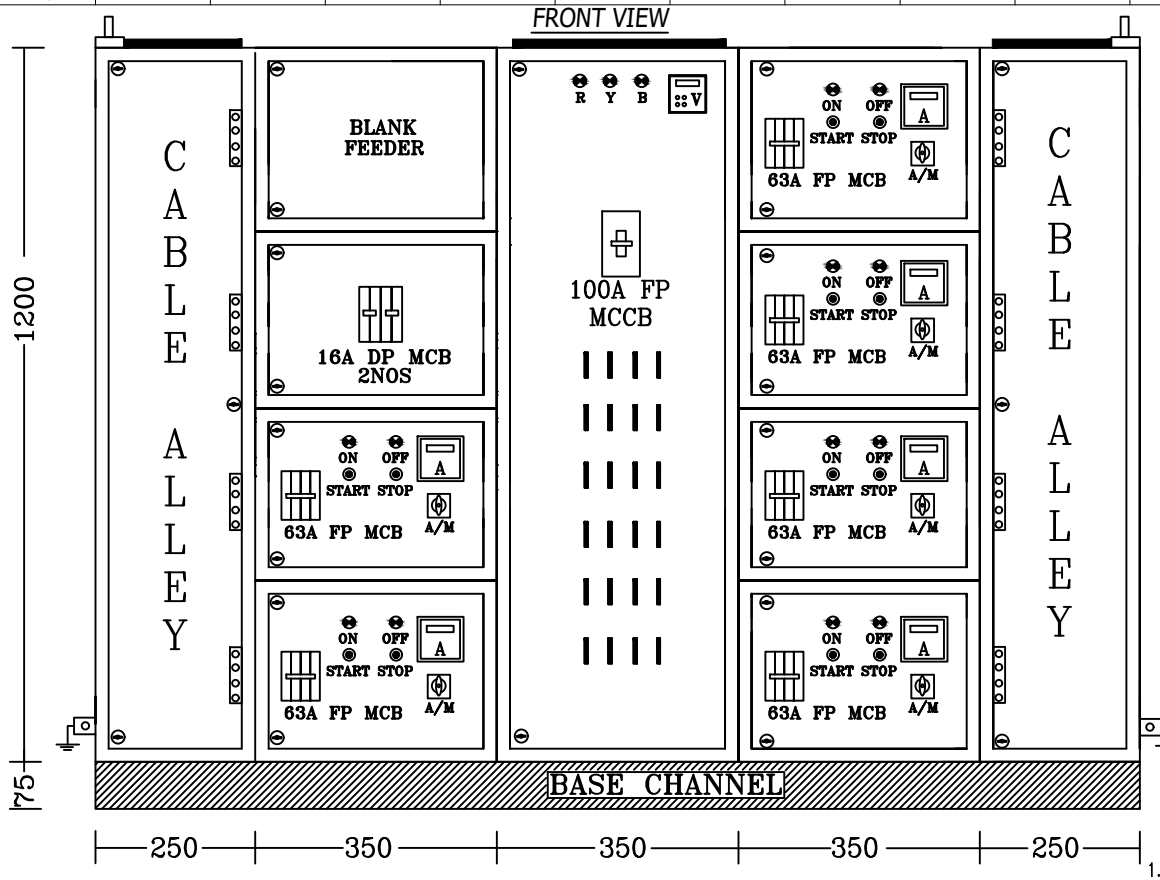

FOUNDATION VIEW

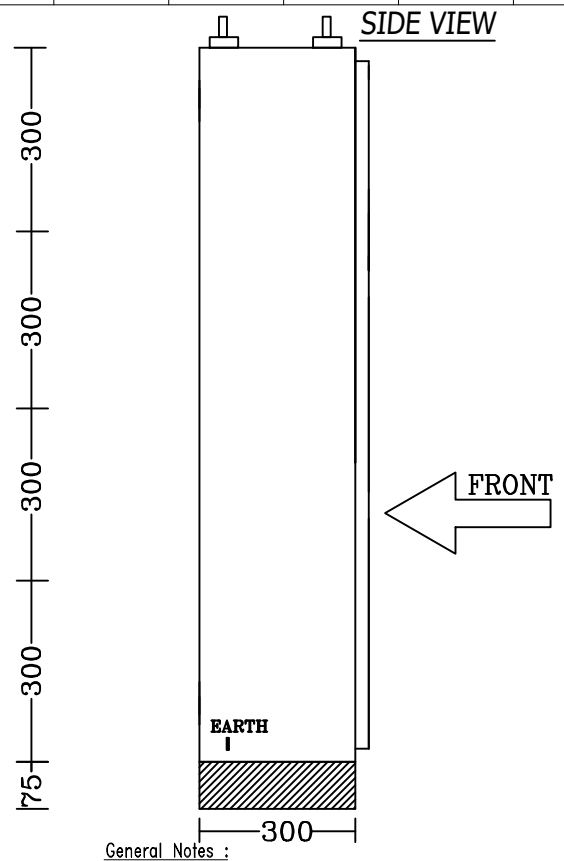

General Notes :

1. All dimensions are in mm. unless otherwise stated.
   The panel will bve made on 2mm. thick crca sheet steel.
2. Degree of protection : IP-52.
3. All opening shall be covered by foam rubber gasket.
4. The panel will be painted by siemens gray RAL-7032.
5. Feeder/board tally plates are of anodised with engraved lettering.
6. Door shall be earthed with pvc insulated multistrand copper wire.
7. Copper busbar size: 20 x 05 tinned copper busbar for phases.
   20 x 05 tinned copper busbar for neutral.
   20 x 05 AL. bus for earthing.
8. Control-2.5sq. & Ct wiring-2.5sq. fr. copper wire (Gloster/Bonton/Anchor).
9. Incoming - Top Entry , Outgoing-Top Entry **10. Panel Weight -200kg**

	NAME	DATE
DRAWN	S.GOSWAMI	31.12.2022
CHECKED	P.K.B	31.12.2022
APPROVED	N.D	31.12.2022

Owner- Bank of India (Relationship beyond banking)

ARCHITECT & PMC: GHOSH BOSE & ASSOCIATES ARCHITECTURE

MFG.BY : APC KOLKATA (CPRI TESTED)
AN ISO-9001 : 2008 COMPANY
8 PAGLADANGA ROAD,KOL-105

CONTRACTOR:M/S. SUBIR ENGINEERING WORKS (P) LIMITED

Project-CONSTRUCTION OF MULTI-STORIED BUILDING FOR BANK OF INDIA ON BANK'S PLOT NO, CBD-87, AT FINANCIAL HUB AREA AT NEWTOWN, RAJARHAT, KOLKATA, WEST BENGAL-700135

TITLE: **DOMESTIC PUMP PANEL**

DRG. NO. APC022/AC/4766

SHEET: 1 OF 4 | TOTAL SHEET : 4

NOT TO SCALE

REV.-0	DATE:
REV.-1	DATE:
REV.-2	DATE:
REV.-3	DATE:

The copying, distribution and utilization of this document offenders will be held liable for the payment of damages

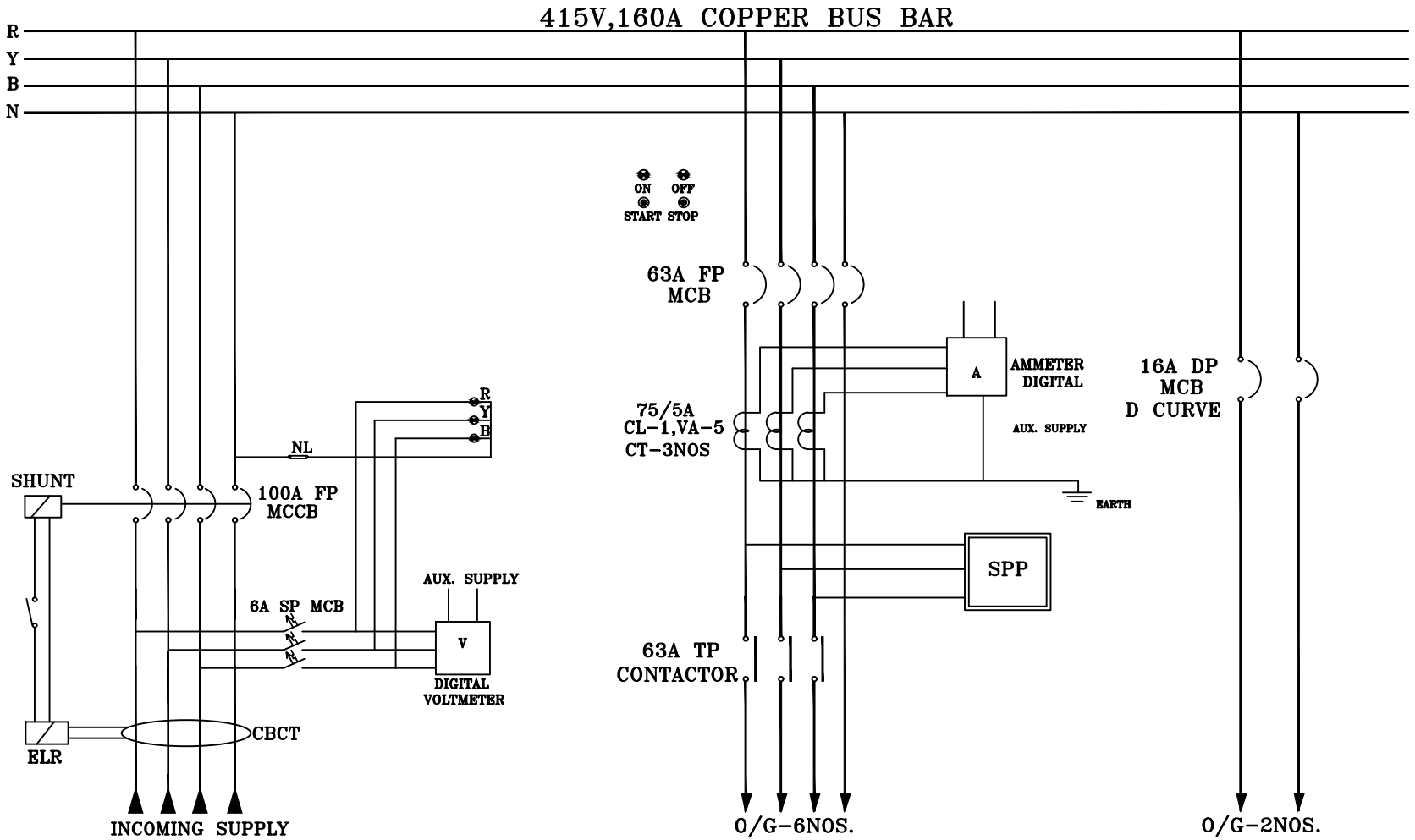

	NAME	DATE
DRAWN	S.GOSWAMI	31.12.2022
CHECKED	P.K.B	31.12.2022
APPROVED	N.D	31.12.2022

Owner- Bank of India (Relationship beyond banking)

ARCHITECT & PMC: GHOSH BOSE & ASSOCIATES ARCHITECTURE

MFG.BY : APC — KOLKATA (CPRI TESTED) AN ISO-9001 : 2008 COMPANY 8 PAGLADANGA ROAD,KOL-105

CONTRACTOR:M/S. SUBIR ENGINEERING WORKS (P) LIMITED

Project-CONSTRUCTION OF MULTI-STORIED BUILDING FOR BANK OF INDIA ON BANK'S PLOT NO, CBD-87, AT FINANCIAL HUB AREA AT NEWTOWN, RAJARHAT, KOLKATA, WEST BENGAL-700135

TITLE: *DOMESTIC PUMP PANEL*

DRG. NO. *APC022/AC/4766*

SHEET: 2 OF 4 — TOTAL SHEET : 4

NOT TO SCALE

REV.- 1	DATE:
REV.-	DATE:
REV.-	DATE:
REV.-	DATE:

The copying, distribution and utilization of this document offenders will be held liable for the payment of damages

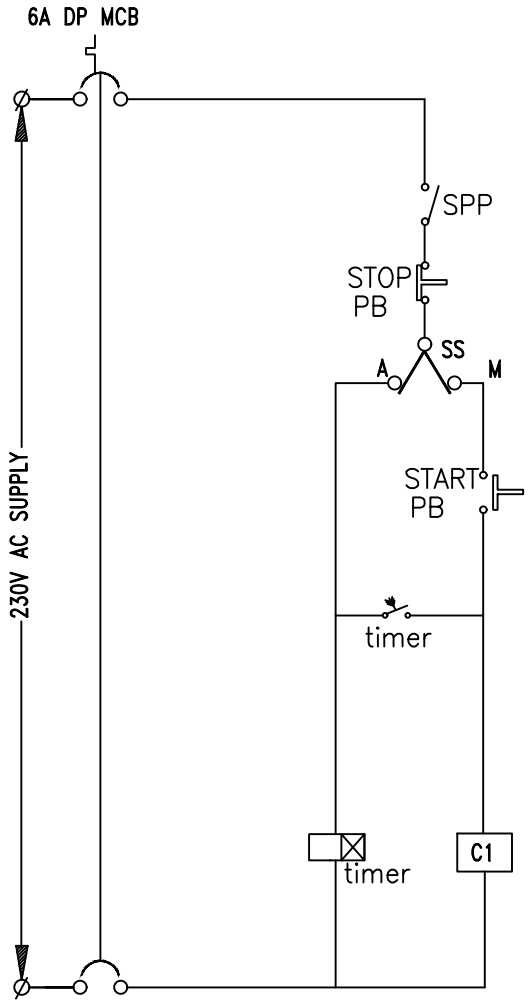

	NAME	DATE
DRAWN	S.GOSWAMI	31.12.2022
CHECKED	P.K.B	31.12.2022
APPROVED	N.D	31.12.2022

Owner- Bank of India Relationship beyond banking

ARCHITECT & PMC: GHOSH BOSE & ASSOCIATES ARCHITECTURE

MFG.BY : APC KOLKATA (CPRI TESTED) AN ISO-9001 : 2008 COMPANY 8 PAGLADANGA ROAD,KOL-105

CONTRACTOR:M/S. SUBIR ENGINEERING WORKS (P) LIMITED

Project-CONSTRUCTION OF MULTI-STORIED BUILDING FOR BANK OF INDIA ON BANK'S PLOT NO, CBD-87, AT FINANCIAL HUB AREA AT NEWTOWN, RAJARHAT, KOLKATA, WEST BENGAL-700135

TITLE:

DOMESTIC PUMP PANEL

DRG. NO. APC022/AC/4766

SHEET: 3 OF 4 | TOTAL SHEET : 4

NOT TO SCALE

REV.-0	DATE:
REV.-1	DATE:
REV.-2	DATE:
REV.-3	DATE:

The copying, distribution and utilization of this document offenders will be held liable for the payment of damages

5.00	DOMESTIC PUMP PANEL			
	INCOMER FEEDER			
1	100A 4P 25KA MCCB TM RELEASE	1	NOS	L&T
2	3PH VOLTMETER 96X96 SQ MM 0-500V	1	NOS	L&T
3	LED INDICATION LAMP (R/Y/B)	3	NOS	ESBEE AS L&T
4	ELR WITH CBCT	1	NOS	L&T/SCHNEIDER
5	6A SP MCB	3	NOS	L&T
	OUTGOING FEEDER			
1	63A 4P MCB 10KA "D CURVE"	6	NOS	L&T
2	3PH AMMETER 96X96 SQ MM FLUSH MOUNTING 0-60A	6	NOS	L&T
3	CT 75/5A CL-1, VA-5 TAPE WOUND TYPE	18	NOS	KAPPA
4	63A TP CONTACTOR	6	NOS	L&T
5	START/STOP PUSH BUTTON	12	NOS	ESBEE AS L&T
6	INDICATION LAMP (ON/OFF)	12	NOS	ESBEE AS L&T
7	AUTO/MANUAL SELECTOR SWITCH	6	NOS	KAYCEE/L&T
8	SINGLE PHASE PREVENTOR	6	NOS	C&S/L&T
9	16A DP MCB 10KA "D CURVE"	2	NOS	L&T

	NAME	DATE
DRAWN	S.GOSWAMI	31.12.2022
CHECKED	P.K.B	31.12.2022
APPROVED	N.D	31.12.2022

Owner- Bank of India Relationship beyond banking

ARCHITECT & PMC: SHUBH HOUSE & ASSOCIATES ARCHITECTURE

MFG.BY : APC KOLKATA (CPRI TESTED) AN ISO-9001 : 2008 COMPANY 8 PAGLADANGA ROAD,KOL-105

CONTRACTOR:M/S. SUBIR ENGINEERING WORKS (P) LIMITED

Project-CONSTRUCTION OF MULTI-STORIED BUILDING FOR BANK OF INDIA ON BANK'S PLOT NO, CBD-87, AT FINANCIAL HUB AREA AT NEWTOWN, RAJARHAT, KOLKATA, WEST BENGAL-700135

TITLE: **DOMESTIC PUMP PANEL**

DRG. NO. APC022/AC/4766

SHEET: 4 OF 4 | TOTAL SHEET : 4

NOT TO SCALE

REV.-0	DATE:
REV.-1	DATE:
REV.-2	DATE:
REV.-3	DATE:

The copying, distribution and utilization of this document offenders will be held liable for the payment of damages