NATIONAL INSTITUTE OF TECHNOLOGY, DURGAPUR

A Project Report Submitted

by

SOUMYADIP DUTTA (23EE8019)

PATTA SNEHITA(23EE8062)

CHAKINALA HARSHITA(23EE8021)

on

Design and Implementation of a Two Product Vending Machine Controller

For the course FPGA based Design (ECE613)

DEPARTMENT OF ELECTRONICS AND COMMUNICATION ENGINEERING

NATIONAL INSTITUTE OF TECHNOLOGY DURGAPUR

APRIL 2026

Input Ports:

Signal	Width	Description
clk	1-bit	System clock — positive edge triggered
rst	1-bit	Synchronous active-HIGH reset — returns FSM to IDLE, reinitialises stock
buy	1-bit	Purchase trigger — transitions FSM from IDLE to PURCHASE state
coin	1-bit	Coin insertion — each HIGH pulse adds Rs. 5 to the balance register
pq	1-bit	Product quantity increment — each HIGH pulse increments qty register by 1
go	1-bit	Execute purchase — triggers transaction validation in PURCHASE state
s1s2	2-bit	Product selector — 2'b01 = P1, 2'b10 = P2, other values undefined

Output Ports:

Signal	Width	Description
balance_display	8-bit	Current coin balance in Rs. — updated on each coin pulse
return_display	8-bit	Change to return — balance minus total cost after successful purchase
selected_product_led	2-bit	LED indicator for selected product — bit[0] for P1, bit[1] for P2
selected_quantity_led	4-bit	LED bar showing current quantity value in binary
done	1-bit	Transaction success flag — pulsed HIGH for one cycle on successful dispense
error	1-bit	Transaction failure flag — pulsed HIGH for one cycle on failed transaction
purchase_mode_active	1-bit	HIGH when FSM is in PURCHASE state
idle_mode_status	1-bit	HIGH when FSM is in IDLE state

RTL:

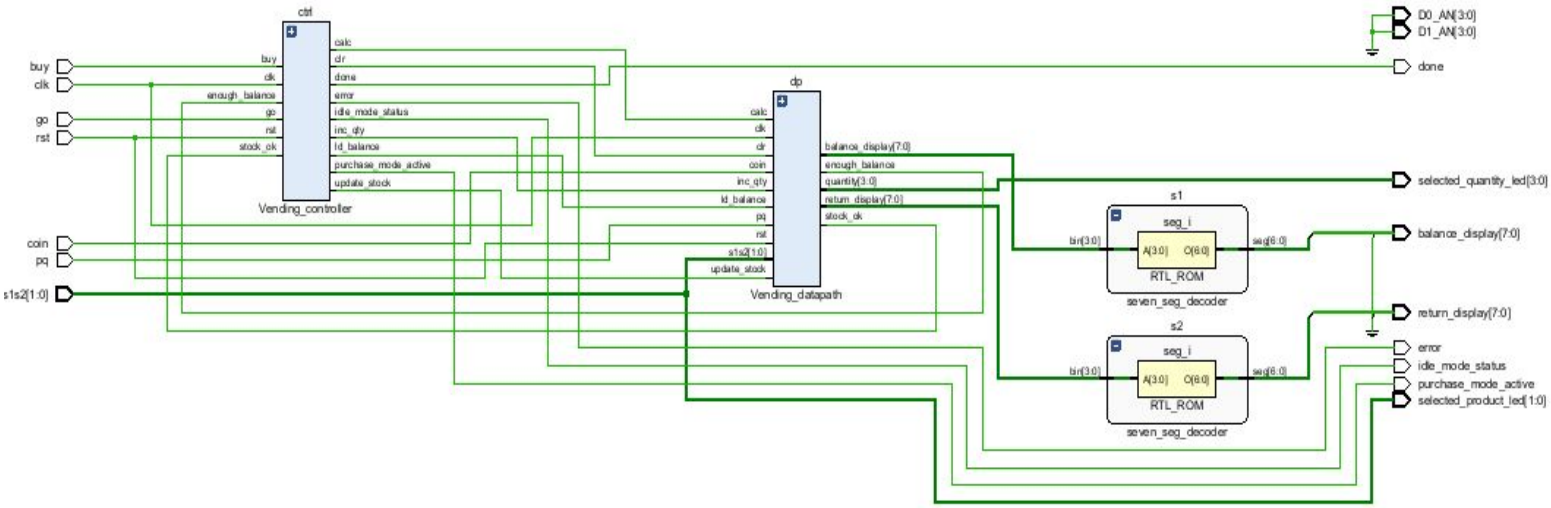

Datapath:

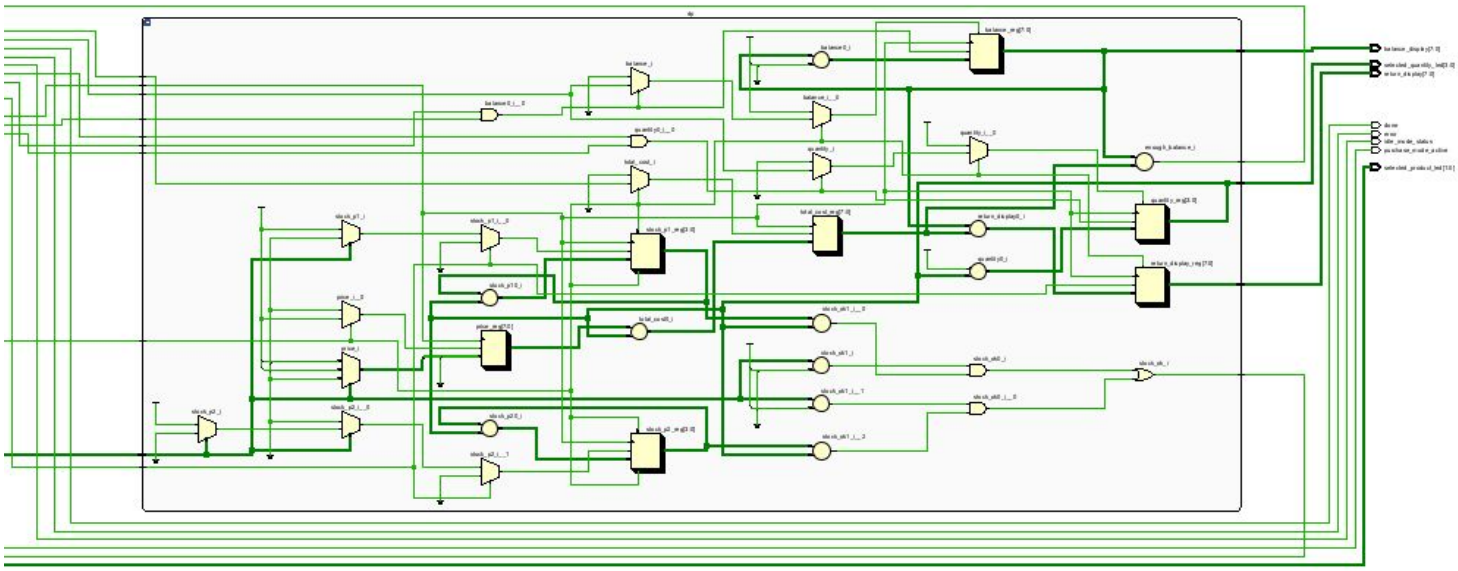

Controller:

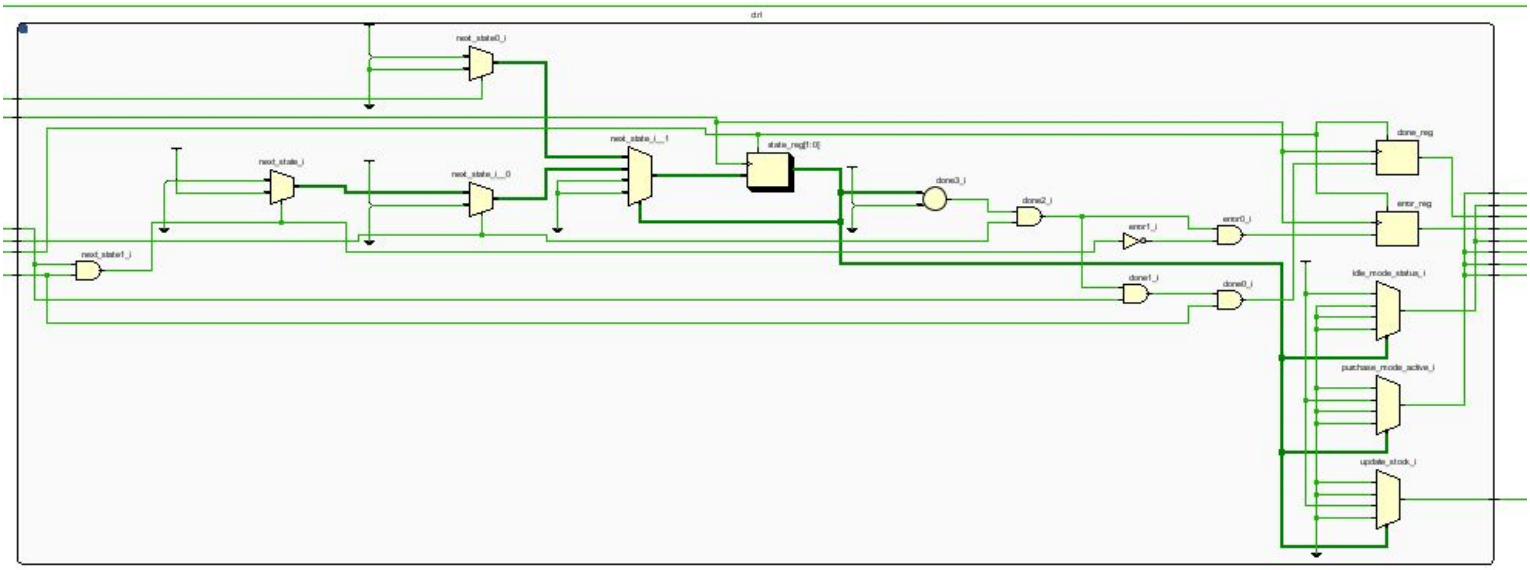

Testbench Simulation:

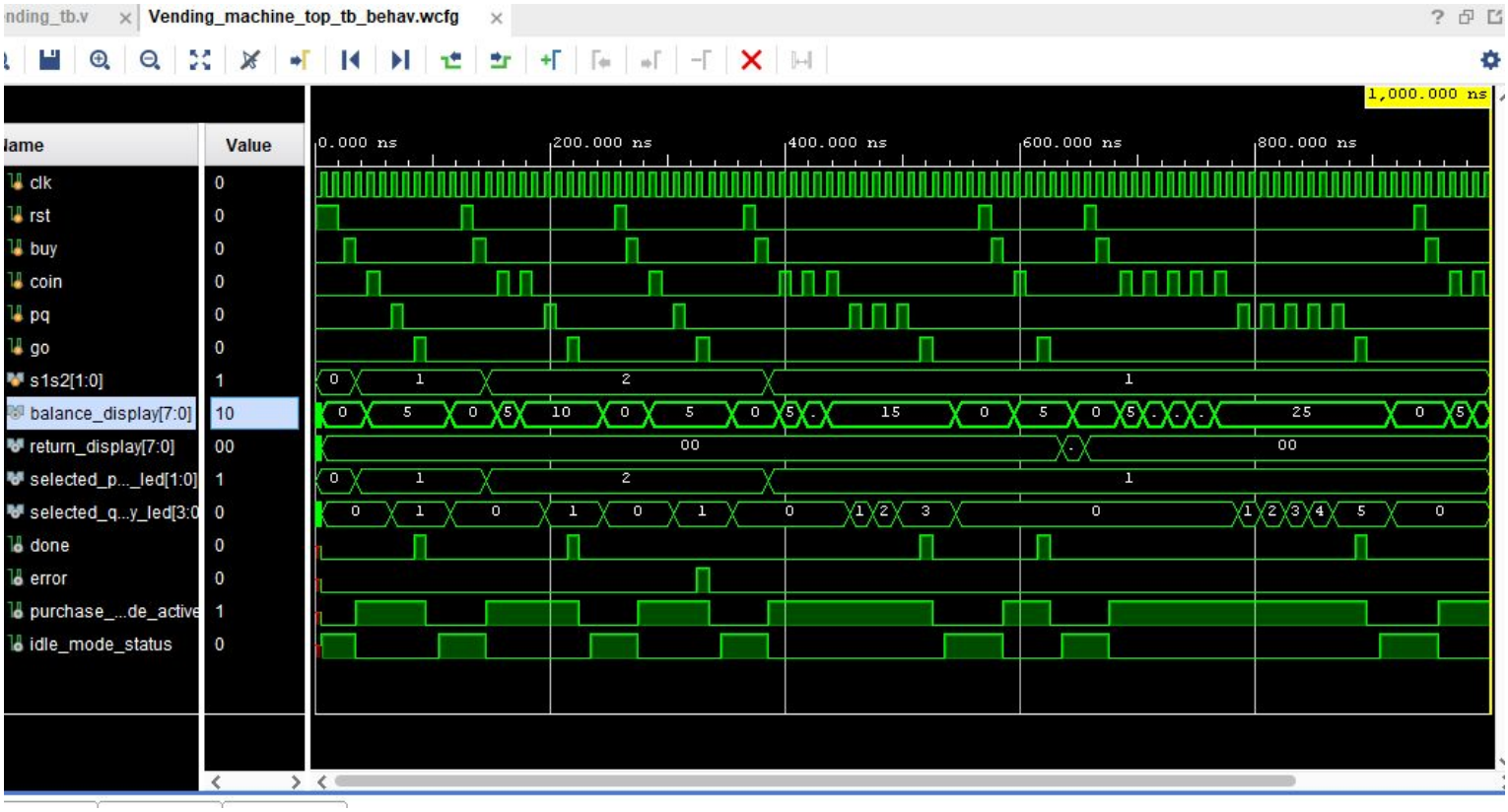

Controller FSM:

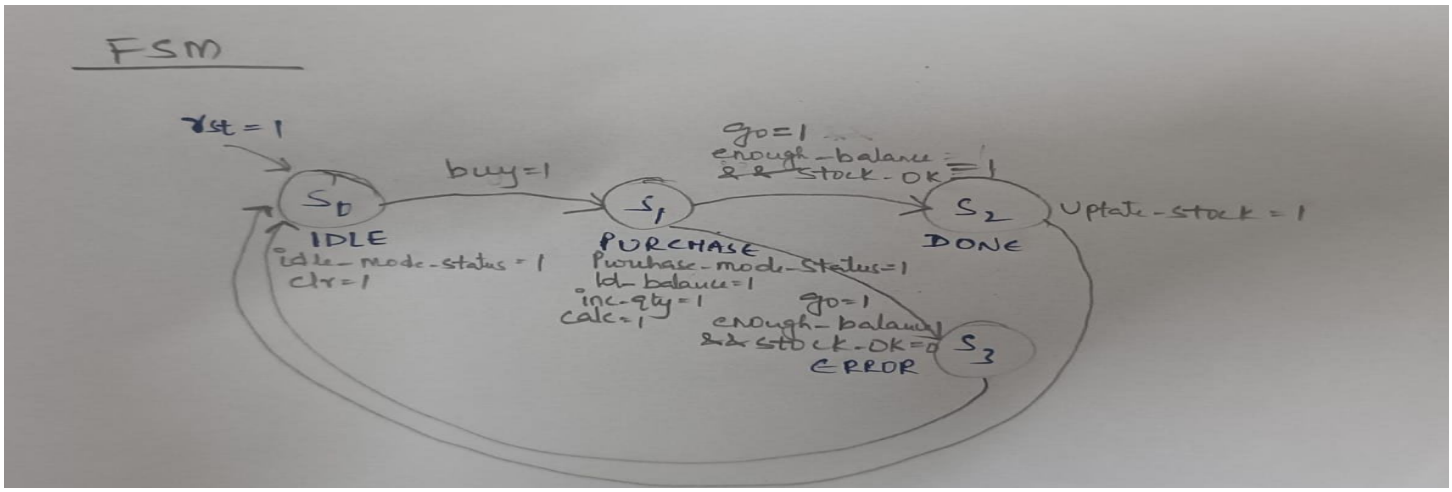

Controller Block:

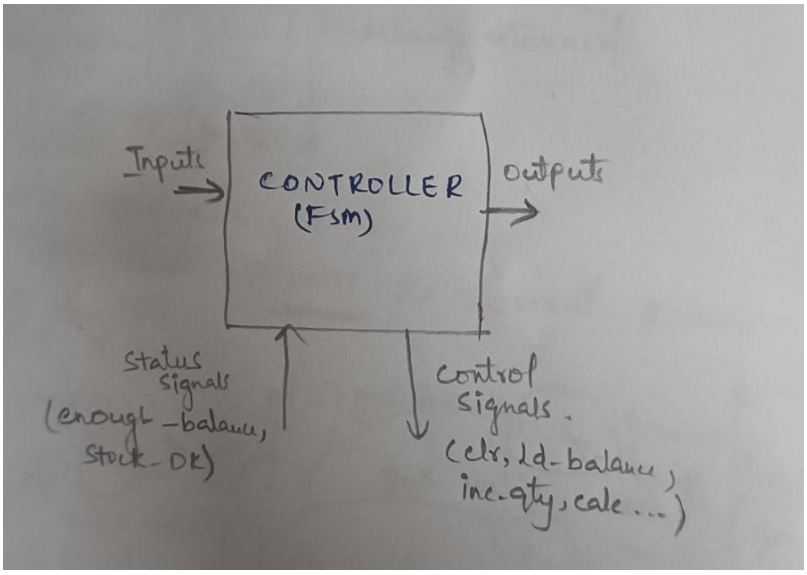

Resource Utilization Table:

Resource	Used	Available	Utilization
Slice LUTs	61	32600	0.19%
Slice Registers	40	65200	0.06%
Block RAM	0	75	0.00%
DSP Slices	0	120	0.00%
Bonded I/O	42	210	20.00%
BUFG Clock Buffers	1	32	3.13%

Key Observations:

- The vending machine design uses very few FPGA resources.
- No Block RAM or DSP slices are required because the design mainly consists of logic gates, flip-flops, and finite state machine control.
- Bonded I/O utilization is relatively higher due to switches, push buttons, LEDs, and seven-segment display connections.
- The design is lightweight and leaves sufficient FPGA resources available for future expansion.
- Additional features such as more products, digital payment, LCD display, or UART communication can be added easily.

Primitive Utilization

Primitive	Count
LUT4	39
LUT6	18
FDRE Flip-Flops	35
FDSE Flip-Flops	5
OBUF	34
IBUF	8
CARRY4	4
BUFG	1

XDC File:

The XDC file defines the physical pin mapping between the FPGA and external hardware components on the Spartan-7 board. All pins use the LVCMOS33 I/O standard for 3.3V operation.

XDC File Pin Description:

clk (F14) : System clock input
rst (J2) : Reset push button input
buy (J5) : Starts the purchase process
coin (H2) : Coin insertion input
pq (J1) : Product quantity selection input
go (V2) : Confirms selected inputs
s1s2[0] (U2), s1s2[1] (U1) : Product selection switches

D0_AN[0] (D5), D0_AN[1] (C4),
D0_AN[2] (C7), D0_AN[3] (A8) : Enable lines for balance display seven-segment

balance_display[0] (D7)
balance_display[1] (C5)
balance_display[2] (A5)
balance_display[3] (B7)
balance_display[4] (A7)
balance_display[5] (D6)
balance_display[6] (B5)
balance_display[7] (A6) : Segment control lines for balance display

D1_AN[0] (H3), D1_AN[1] (J4),
D1_AN[2] (F3), D1_AN[3] (E4) : Enable lines for return display seven-segment

return_display[0] (F4)
return_display[1] (J3)
return_display[2] (D2)
return_display[3] (C2)
return_display[4] (B1)
return_display[5] (H4)
return_display[6] (D1)
return_display[7] (C1) : Segment control lines for return display

selected_product_led[0] (G1),
selected_product_led[1] (G2) : Indicates selected product

selected_quantity_led[0] (F1)
selected_quantity_led[1] (F2)
selected_quantity_led[2] (E1)
selected_quantity_led[3] (E2) : Indicates selected quantity

done (E3) : Indicates successful transaction
error (E5) : Indicates invalid operation or insufficient balance
purchase_mode_active (E6) : Indicates purchase mode is active
idle_mode_status (C3) : Indicates system is in idle state