Basic Electronic circuits Session 7

02 March 2021 15:12

Todays topic: MOSFET amplifier

"MOSFET"

① Amplifier requirements:

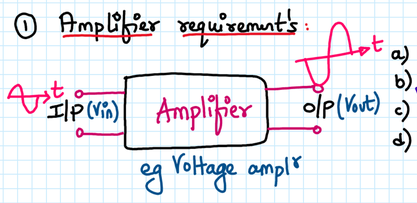

eg Voltage amplr

a) Gain ~ Voltage gain ~ A_v ↑↑
b) I/P impedance ~ Z_i ~ Z_{in} ~ ↑↑ "Rin"
c) O/P impedance ~ Z_o ↓↓
d) Linearity (O/P shld be linear w.r.t I/P)

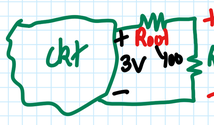

$V_{out} = \frac{R_L}{R_L + R_{out}} \times 3V$

2.72V
2.97V

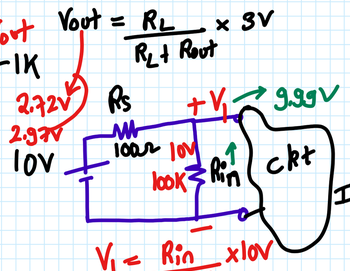

$V_1 = \frac{R_{in}}{R_{in}+R_s} \times 10V$

② Fact: MOSFET as a device amplifies → Small-time varying signals

→ MOSFET: Voltage-dependent current source

$I_D = k_n (V_{GS} - V_{TO})^2$

→ converts a voltage to a current

V_{GS} — I_D : DC
v_{gs} — i_d : AC

This requires MOSFET amplifier to be Linear

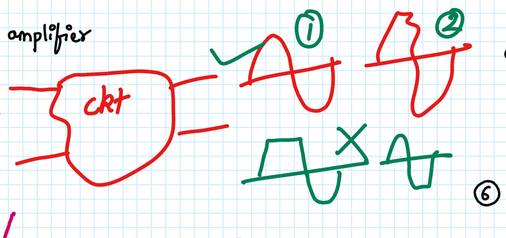

③ Superimpose DC with small s/g AC → Goal MOSFET amplifier

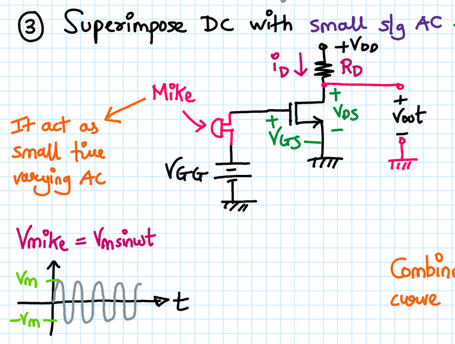

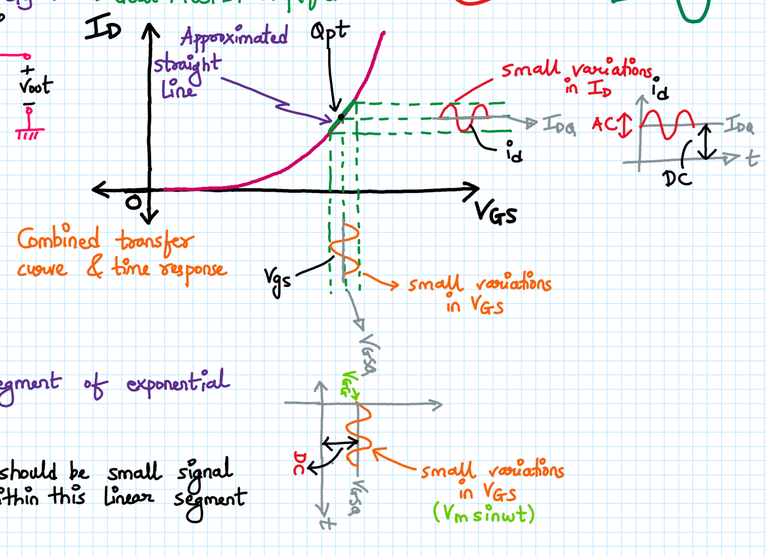

④ Why small-signal?

– Idea is to consider small segment of exponential curve to be Linear

→ AC i/p should be small signal to be within this linear segment

⑤ Building small-signal model: 1st part → gm

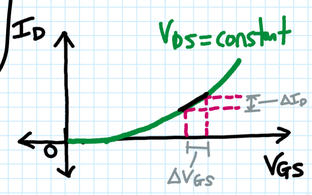

From graph,

$$g_m = \frac{\Delta I_D}{\Delta V_{GS}}\Big|_{V_{DS}=\text{constant}}$$

Unit: $\frac{mA}{V}$

MOSFET's transconductance

$g_m = \frac{\Delta I_D}{\Delta V_{GS}}$ i.e $\Delta I_D = g_m \Delta V_{GS}$ → Equation whispers that gate to source voltage controls the drain to source current

ΔI_D: small changes in I_D (i_d)
g_m: slope — constant
ΔV_{GS}: small changes in V_{GS} (V_{gs})

$\Delta V_{GS} \simeq V_{gs}$ — time-varying

⑥ Derive g_m:

– $I_D = k_n (V_{GS} - V_{TO})^2$

– $g_m = \frac{\Delta I_D}{\Delta V_{GS}} = 2k_n (V_{GS} - V_{TO})$

– $g_m = 2k_n (V_{GS} - V_{TO})$

→ Small-signal transconductance (Mathematically)

⑦ 1st version: Small-signal model of MOSFET

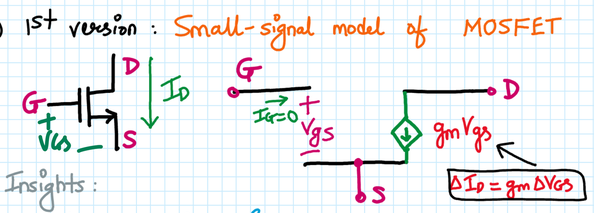

Insights:

① Gate to source is open?

Since Z_{in} of MOSFET is v.high
∴ $I_G \simeq 0$, This is due to the fact that the gate is isolated from drain to source by oxide layer

② Small-signal model → (represent only time-varying quantities)

represent only changes in voltage / current parameters v_{gs} / i_d

It suggests that the drain fluctuations (ΔI_D) is equal to V_{GS} fluctuations (ΔV_{GS}) times the slope (g_m)

⑧ Small-signal output resistance: (r_o or r_d)

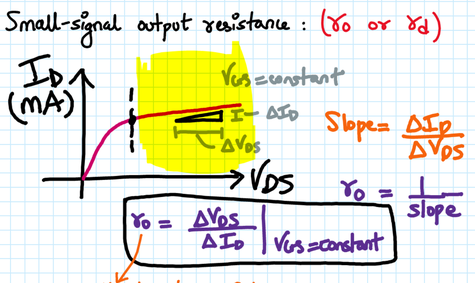

Slope $= \frac{\Delta I_D}{\Delta V_{DS}}$

$r_o = \frac{1}{\text{slope}}$

$$r_o = \frac{\Delta V_{DS}}{\Delta I_D}\Big|_{V_{GS}=\text{constant}}$$

small-s/g o/p resistance of a MOSFET-biased in saturation region

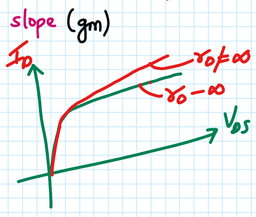

⑨ Derive r_d:

$I_D = k_n (V_{GS} - V_{TO})^2 (1 + \lambda V_{DS})$

– $r_d = \frac{\Delta V_{DS}}{\Delta I_D}$; $\frac{\Delta I_D}{\Delta V_{DS}} = \lambda \underbrace{k_n (V_{GS} - V_{TO})^2}_{I_{DQ}}$

– $\frac{\Delta I_D}{\Delta V_{DS}} = \lambda I_{DQ}$; $r_d = \frac{1}{\lambda I_{DQ}}$

$r_d = \frac{1}{\lambda I_{DQ}}$

CLM parameter

Channel length modulation parameter

⑩ Final version: Small-signal model of MOSFET

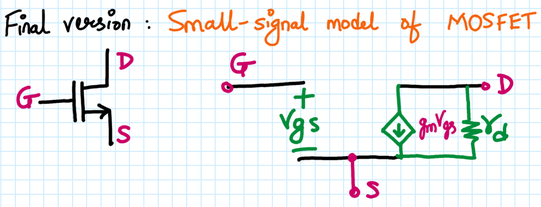

* MOSFET amplifier:

CG
CD
CS ✓
(Common Source Amplr)

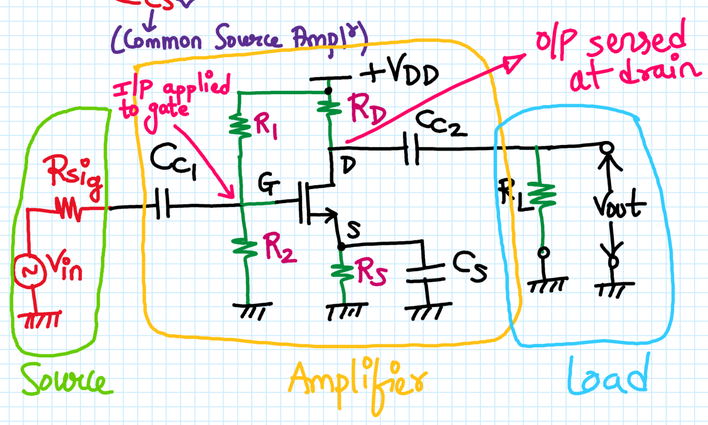

Av ✓
Zin ✓
Zout ✓

* Numerical:

For the given amplifier, find Av, Zin & Zout

Av → voltage gain
Zin → I/p impedance
Zout → o/p impedance

flow: ① V_{GSQ}, I_{DQ} ② g_m ③ $A_v = -g_m(R_D \| R_L)$, $Z_{in} = R_1 \| R_2$, $Z_{out} = R_D \| R_L$

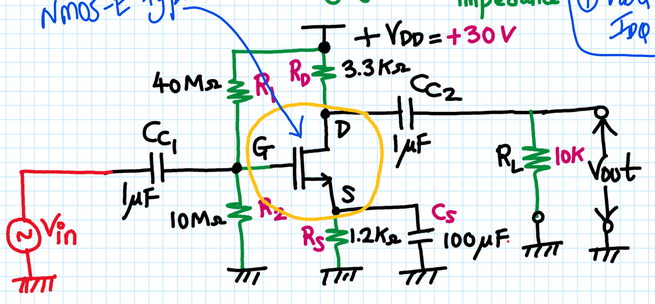

Given: MOSFET parameters
$V_{tn} = 3V$
$k_n = 0.4 \frac{mA}{V^2}$

Assume $r_o = \infty$

Solution: Step1: DC analysis → Consider all external capacitors as open circuit

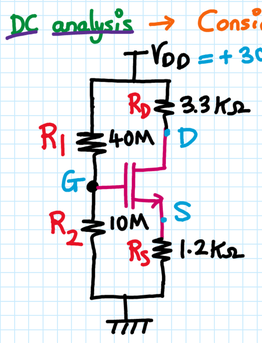

Voltage-divider biasing

$f = 0 \rightarrow DC$

$X_C = \frac{1}{2\pi f C}$ ($X_C \rightarrow \infty$, $C \rightarrow 0$)

$V_G = V_{th} = \frac{R_2}{R_1 + R_2} V_{DD}$

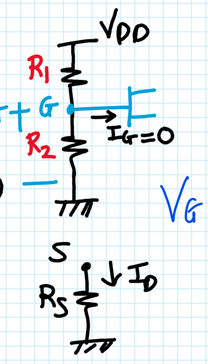

① $I_G = 0$

② $V_G = \frac{R_2}{R_1+R_2} \times V_{DD}$ (VDR)

$V_G = \frac{10\times10^6 \times 30}{40\times10^6 + 10\times10^6}$

$V_G = 6V$

$V_G = V_{th} = 6V$

③ $V_S = I_D R_S$

$V_S = I_D(1200)$

④ $V_{GS} = V_G - V_S = 6V - I_D \times (1200)$ — (a)

→ Assuming that MOSFET is working in saturation region,

⑤ $I_D = k_n (V_{GS} - V_{TO})^2$

$V_{TN} = V_{to} = V_{GS(th)}$ → threshold voltage

$I_D = 0.4 \times 10^{-3} \times (V_{GS} - 3)^2$ — (b)

Put (b) in (a),

⑥ $V_{GS} = 6 - 1200 \times 0.4\times10^{-3} \times (V_{GS} - 3)^2$ (by putting (b) in (a))

$V_{GS} = 6 - 0.48 \times (V_{GS}^2 - 6V_{GS} + 9)$

i.e $V_{GS} = 6 - 0.48V_{GS}^2 + 2.88V_{GS} - 4.32$

→ i.e $0.48V_{GS}^2 - 1.88V_{GS} - 1.68 = 0$

⋮

$V_{GS} = 4.6667V$ or $V_{GS} = -0.75V$ ✗

($V_{GS} > V_{TO}$)

⑦ $I_D = k_n (V_{GS} - V_{TO})^2 = 0.4\times10^{-3} \times (4.6667 - 3)^2$

$I_{DQ} = 1.1111$ mA

Step2: Small-signal parameter

① Since value of r_d is not given, we assume it be ∞

$r_d = \infty$ (Assume)

② $g_m = 2k_n (V_{GS} - V_{TO})$

$g_m = 2 \times 0.4\times10^{-3} \times (4.6667 - 3)$

$g_m = 1.3333 \frac{mA}{V}$

Step3: Draw small-signal equivalent ckt (Assume all ext cap & dc sources to be s.c)

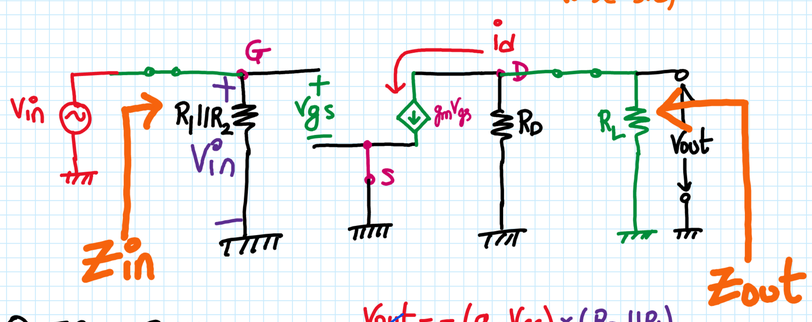

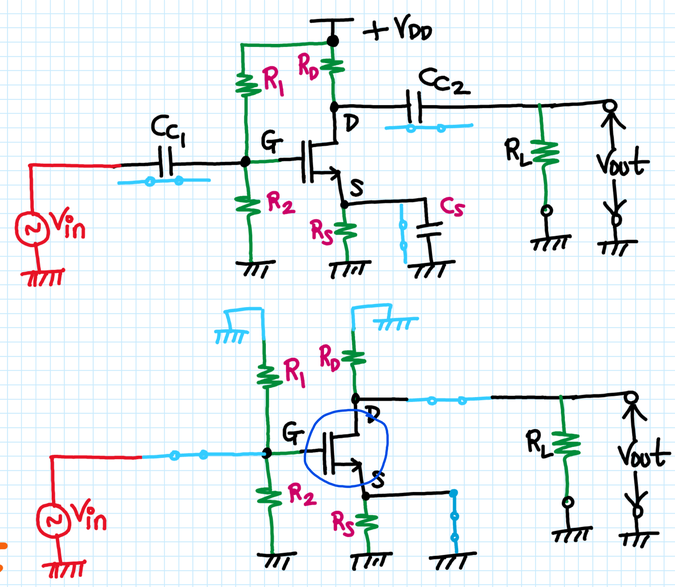

① $Z_{in} = R_1 \| R_2 = 8M\Omega$

② $Z_{out} = R_D \| R_L = 2.4812K\Omega$

③ $A_v = \frac{V_{out}}{V_{in}} = \frac{-(g_m V_{gs}) \times (R_D \| R_L)}{V_{gs}}$

$V_{out} = -(g_m V_{gs}) \times (R_D \| R_L)$

$V_{in} = V_{gs}$

$A_v = -g_m (R_D \| R_L)$

$= -1.3333 \times 10^{-3} \times 2.4812 \times 10^{3}$
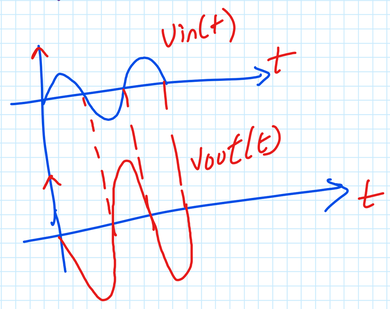
$A_v = -3.3082$