# Networks and Systems

D ROY CHOUDHURY

NEW AGE INTERNATIONAL PUBLISHERS

Copyrighted material

# Networks and Systems

D ROY CHOUDHURY

NEW AGE INTERNATIONAL PUBLISHERS

Copyrighted material

# Networks and Systems

D ROY CHOUDHURY

NEW AGE INTERNATIONAL PUBLISHERS

Copyrighted material

Copyright © 1998, New Age International (P) Ltd., Publishers
Published by New Age International (P) Ltd., Publishers
First Edition : 1998
Reprint : 2005

---

All rights reserved.

No part of this book may be reproduced in any form, by photostat, microfilm, xerography, or any other means, or incorporated into any information retrieval system, electronic or mechanical, without the written permission of the copyright owner.

**ISBN : 81-224-0002-7**

**Rs. 260.00**

**39 40 41 42 43 44 45**

**C-05-09-392**

Printed in India at Ajit Printers, Delhi.

PUBLISHING FOR ONE WORLD

**NEW AGE INTERNATIONAL (P) LIMITED, PUBLISHERS**
*(formerly Wiley Eastern Limited)*
4835/24, Ansari Road, Daryaganj, New Delhi - 110002
Visit us at www.newagepublishers.com

Copyrighted material

# Contents

*Preface* v

1. BASIC CIRCUIT ELEMENTS AND WAVEFORMS 1
   1.1 Introduction 1
   1.2 Circuit Components 2
   1.3 Assumptions for Circuit Analysis 13
   1.4 Definitions 14
   1.5 Conservation of Energy 16
   1.6 Source of Electrical Energy 16
   1.7 Standard Input Signals 19
   1.8 Sinusoidal Signal 23
   1.9 Kirchhoff's Laws 27

2. MESH AND NODE ANALYSIS 42
   2.1 Introduction 42
   2.2 Kirchhoff's Laws 42
   2.3 Source Transformation 51
   2.4 Mesh and Node Analysis 56
   2.5 Network Equations for RLC Network 66
   2.6 Magnetic Coupling 78

3. GRAPH THEORY AND NETWORK EQUATION 102
   3.1 Introduction 102
   3.2 Graph of a Network 102
   3.3 Trees, Cotrees and Loops 104
   3.4 Incidence Matrix 106
   3.5 Cut-Set Matrix 114
   3.6 Tie-Set Matrix and Loop Currents 119
   3.7 Number of Possible Trees of a Graph 121
   3.8 Analysis of Networks 122
   3.9 Network Equilibrium Equation 129
   3.10 Duality 162
   3.11 General Network Transformations 167

Copyrighted material

4. FOURIER SERIES 187
4.1 Introduction 187
4.2 Trigonometric Fourier Series 188
4.3 Evaluation of Fourier Coefficients 189
4.4 Waveform Symmetry 197
4.5 Fourier Series in Optimal Sense 207
4.6 Exponential Form of Fourier Series 208
4.7 Effective Value 217
4.8 Fourier Transform 219
4.9 Effective Value of a Non-Sinusoidal Wave 234

5. THE LAPLACE TRANSFORM 245
5.1 Introduction 245
5.2 Laplace Transformation 246
5.3 Some Basic Theorems 247
5.4 Gate Function 258
5.5 Impulse Function 262
5.6 Laplace Transform of Periodic Functions 263

6. APPLICATION OF LAPLACE TRANSFORM 276
6.1 Introduction 276
6.2 Solution of Linear Differential Equation 276
6.3 Heaviside's Partial Fraction Expansion 277
6.4 Kirchhoff's Laws 282
6.5 Solution of Network Problems 289

7. NETWORK THEOREMS 316
7.1 Introduction 316
7.2 Superposition Theorem 316
7.3 Reciprocity Theorem 325
7.4 Thevenin's Theorem 327
7.5 Norton's Theorem 330
7.6 Millman's Theorem 335
7.7 Maximum Power Transfer Theorem 340
7.8 Substitution Theorem 343
7.9 Compensation Theorem 346
7.10 Tellegen's Theorem 348

8. RESONANCE 368
8.1 Introduction 368
8.2 Series Resonance 368
8.3 Parallel Resonance 379

9. ANALOGOUS SYSTEM 391
9.1 Introduction 391

Copyrighted material

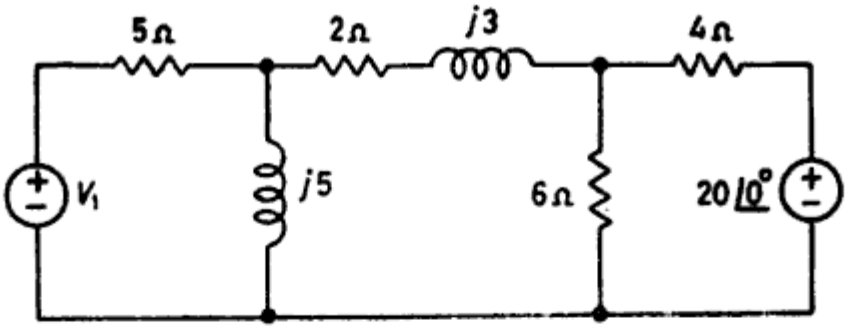


Fig. P. 2.27

28. Determine the voltage across the capacitor in the circuit in Fig. P. 2.28.

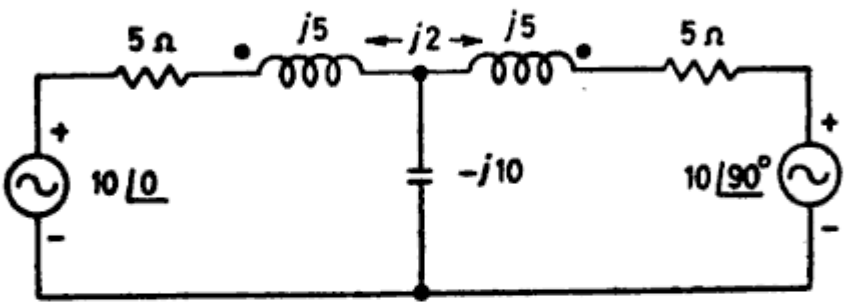


Fig. P. 2.28

Copyrighted material

# 3. Graph Theory and Network Equation

## 3.1 INTRODUCTION

Another simple application of matrices is to establish the relevant equations for the solution of network problems. Any interconnection of passive and active circuit elements constitutes an electric network, and the object of network analysis is to find the current responses which are produced in the network by the presence of the active elements. In the case of more complicated networks, the general analysis is greatly facilitated by the use of a few elementary facts from the "theory of linear graphs" which forms a branch of topology. According to this, only the geometrical pattern of a network is considered and no distinction is made between the different types of physical elements of which it is composed. The basic elements, according to this theory, are branches, branch points or nodes and loops.

Before analysing linear graphs and their properties and applications, it is necessary to define the following terms. We restrict our discussion to planar graph of planar network.

## 3.2 GRAPH OF A NETWORK

*A linear graph* is defined as a collection of points called *nodes*, and line segments called *branches*, the nodes being joined together by the branches. The graph of the network of Fig. 3.1(a) is shown in Fig. 3.1(b). The graph of a planar network is drawn by keeping all the points of intersection of two or more branches, known as nodes, and representing the network elements by lines, voltage and current sources by their internal impedances. The internal impedance of an ideal voltage source is zero and to be replaced by short circuit, and that of an ideal current source is infinite and hence to be replaced by an open circuit.

Nodes and branches are numbered. The graph in Fig. 3.1(b) has six branches and 4 nodes. This is known as a undirected graph.

The same graph has been used to make some observations from which generalisations can be made. Properties to be defined will also be illustrated with the same graph.

Branches whose ends fall on a node or vertex are said to be *incident* at the node. Branches 2, 4 and 5 are incident at node 2.

Each branch or edge of the graph in Fig. 3.1(c) carries an arrow to indi-

Copyrighted material

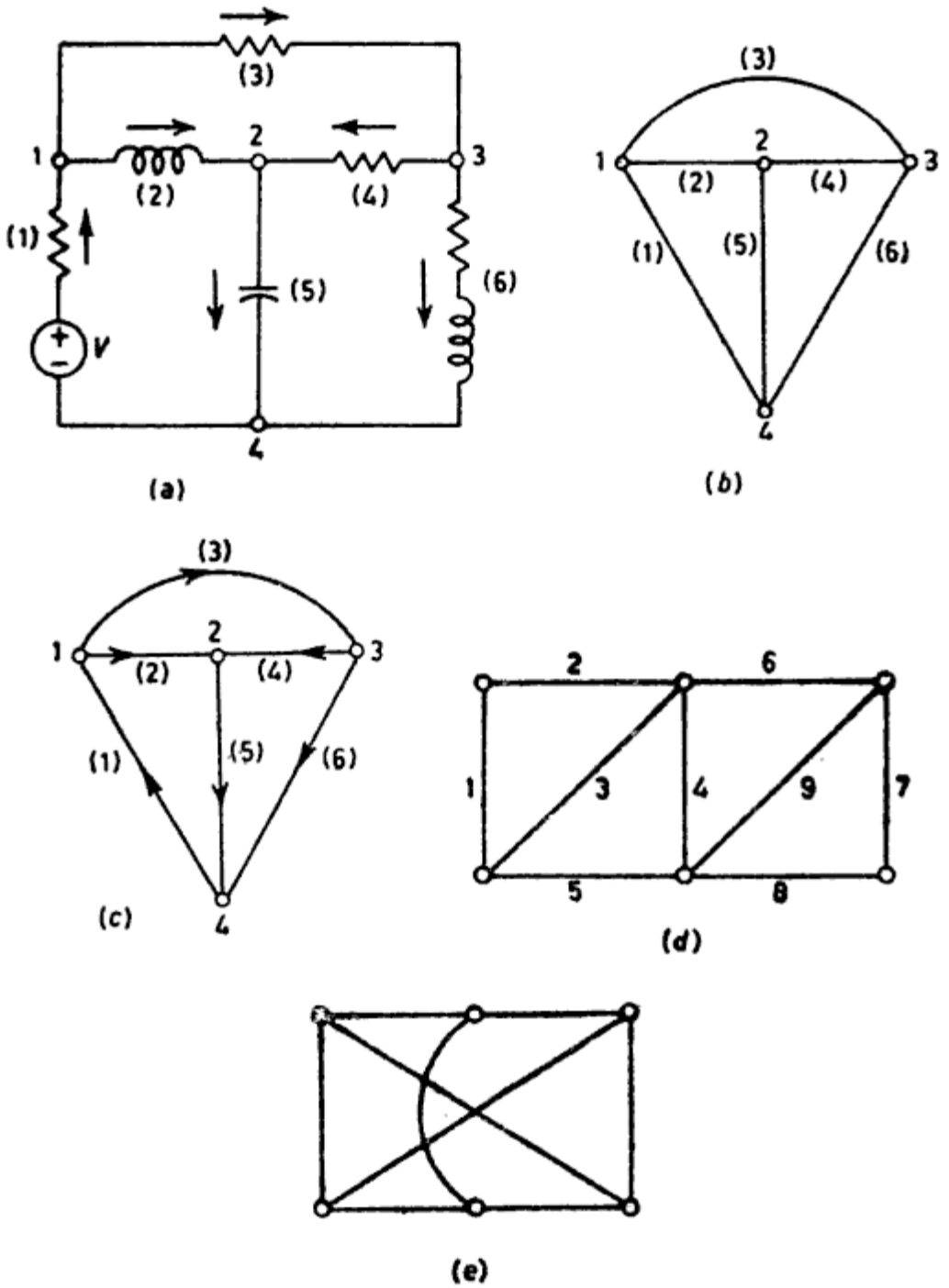


Fig. 3.1. (a) A network (b) associated graph (c) directed graph (d) planar graph (e) nonplanar graph

cate its orientation. A graph whose branches are oriented is called a directed or oriented graph.

The rank of a graph is $(n - 1)$ where $n$ is the number of nodes or vertices of the graph.

A subgraph is a subset of the branches and nodes of a graph. The subgraph is said to be proper if it consists of strictly less than all the branches and nodes of the graph.

A path is a particular subgraph consisting of an ordered sequenee of branches having the following properties.

Copyrighted material

1. At all but two of its nodes, called internal nodes, there are incident exactly two branches of the subgraph.
2. At each of the remaining two nodes, called terminal nodes, there is incident exactly one branch of the subgraph.
3. No proper subgraph having the same two terminal nodes has properties (1) and (2).

In the example in Fig. 3.1(c), branches 2, 5 and 6, together with all the four nodes, constitute a path. A graph is connected if there exists a path between any pair of vertices. Otherwise, the graph is disconnected. A circuit or loop is a particular subgraph of a graph, at each node of which are incident exactly two branches of the subgraph. Thus, if the two terminal nodes of a path are made to coincide, the result will be a circuit or loop. The circuits of a graph have the following properties.

1. The maximum number of branches possible, in a circuit, will be equal to the number of nodes or vertices.
2. There are exactly two paths between any pair of vertices in a circuit.
3. There are at least two branches in a circuit.

In the example in Fig. 3.1(c), sets of branches {4, 5, 6}, {1, 2, 5}, {2, 3, 4}, etc. have formed different circuits of the given graph. It is to be remembered that, for a given graph, there are innumerable possible circuits. There may be redundancy for which we have to search for fundamental circuits which will be irredundant. In other words, the fundamental circuit gives the linearly independent mesh or loop equations to be solved using Kirchhoff's voltage law.

Topological graphs can be drawn or mapped on a plane. Either they can be drawn so that no branches cross each other, or they cannot. A graph is said to be planar if it can be drawn on a two-dimensional plane, such that no two branches (edges) intersect at a point that is not a node (vertex). The two graphs in Fig. 3.1(d) and (e) have the same number of nodes and branches; the graph in (d) is planar while that in (e) is nonplaner.

The branches of a planar graph separate a plane into small regions, each of which is called a mesh. Specifically, a mesh is a sequence of branches of a planar graph that enclose no other branch of the graph within the boundary formed by these branches.

## 3.3 TREES, COTREES AND LOOPS

From the topological point of view, a network consists of $n$ nodes which are interconnected in some way, in pairs, by $b$ edges or branches, Starting at any node, it is possible, usually in a number of different ways, to traverse adjacent branches and return to the starting node. Such a closed path formed by network branches is known as a loop. We shall suppose the network to be connected, such that it is possible to travel from any one node to any other along the branches of the network. Very important in linear-graph theory is the concept of a tree. This is a set of branches with every node connected to every

Copyrighted material

other node (directly or indirectly) such that removal of any single branch destroys this property. Now the nodes of a network may be interconnected in more than one way, so that every network has more than one tree. Figure 3.1(a) shows a simple network of a 4 nodes and 6 branches, and three possible trees are shown in Fig. 3.2. Now, a complete tree may be formed by starting with any one branch and adjoining a second to it at one end, to move on to a third node. From one of these three nodes, we select a third branch along which we can move to a fourth node, and so on, until all the nodes have been reached. Thus, it will be clear that a complete tree contains $n-1$ branches, which are known as the branches-in-tree. If, from the set of all $b$ branches of the network, we remove the $n-1$ tree-branches, there remains a set of $(b-n+1)$ equations to be solved using Kirchhoff's voltage law.

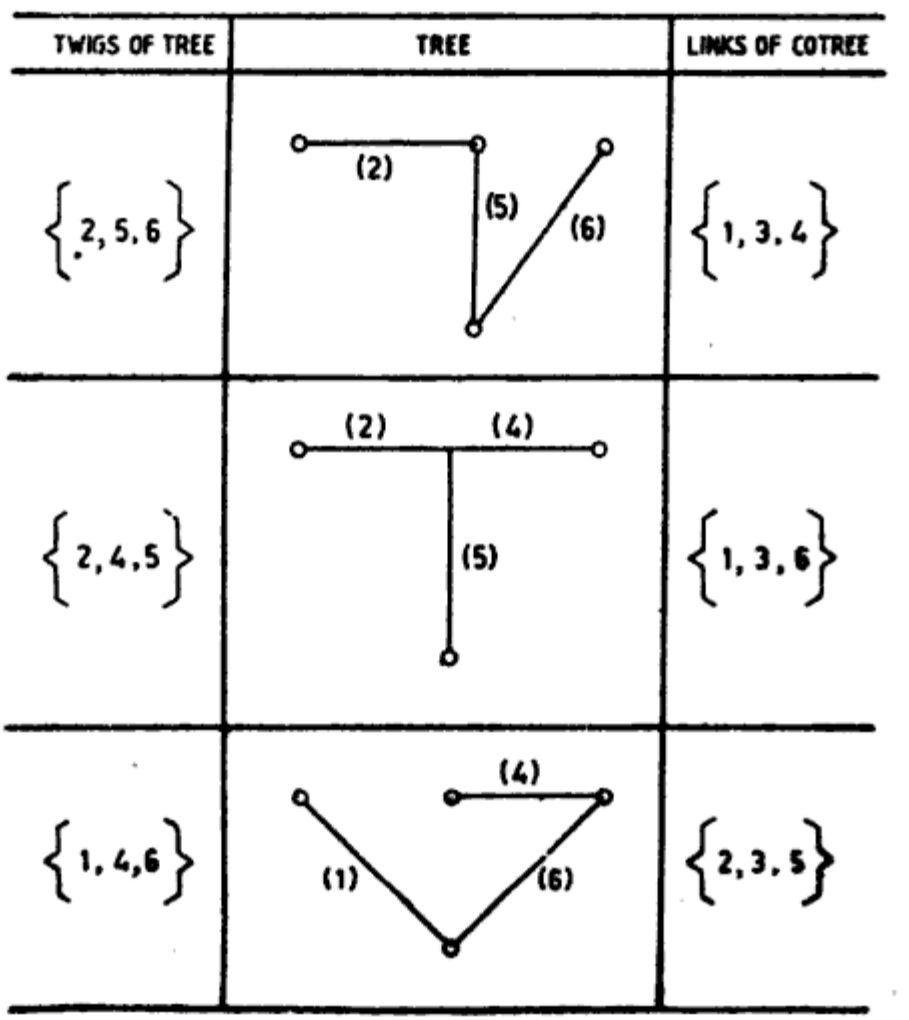


Fig. 3.2. Twigs, trees and cotrees

A tree is a connected subgraph of a connected graph containing all the nodes of the graph but containing no loops. A tree has $(n-1)$ number of branches, where $n$ is the number of nodes or vertices of the graph $G$. The branches of a tree are called *twigs*; those branches that are not on a tree are called links, or chords. All the links of a tree together constitute the complement of the corresponding tree and is called the cotree. Obviously, the number

Copyrighted material

of branches of any cotree will be $b-(n-1)$, where $b$ is the number of branches or edges of the graph. There exists a cotree for every tree of a graph. As there are innumerable possible trees of a graph, it is obvious that for each tree there exists a particular cotree corresponding to that particular tree. For the graph given in Fig. 3.1(b), the set of twigs in Fig. 3.2 constitute some of the possible trees. The corresponding cotrees formed by the links or chords are also given in Fig. 3.2.

### 3.3.1 Properties of Trees

1. A connected subgraph of a connected graph is a tree if there exists only one path between any pair of nodes in it. Conversely, in a tree, there exists one and only one path between any pair of nodes.
2. Every connected graph has at least one tree.
3. The number of terminal nodes or end vertices of every tree are two.
4. A connected subgraph of a connected graph is a tree if there exists all the nodes of the graph.
5. Each tree has $(n-1)$ branches, where $n$ is the number of nodes of the tree.
6. The rank of a tree is $(n-1)$. This is also the rank of the graph to which the tree belongs.

If a graph is non-connected, the concept corresponding to a tree for a connected graph is called a *forest*, which is defined as a set of trees, one for each separate part. If $(p+1)$ is the number of separate parts of a non-connected graph and $(n+1)$ is the number of nodes, then a *forest* will contain $(n-p)$ twigs. The complement of the forest is the *coforest*.

## 3.4 INCIDENCE MATRIX

When a graph is given, e.g. in Fig. 3.1(c), it is possible to tell which branches are incident at which nodes, and what the orientations relative to the nodes are. Conversely, the graph would be completely defined if this information (namely, which branches are incident at which nodes and with what orientations) is given. The most convenient way in which this incidence information can be given is in a matrix form.

For a graph with $n$ nodes and $b$ branches, the complete incidence matrix $A_a = a_{hk}$ is a rectangular matrix of order $n \times b$, whose elements have the following value

$$
\begin{aligned}
A_{hk} &= 1, \text{ if branch } k \text{ is associated with node } h \text{ and oriented away from node } h \\
&= -1, \text{ if branch } k \text{ is associated with node } h \text{ and oriented towards node } h \\
&= 0, \text{ if branch } k \text{ is not associated with node } h
\end{aligned}
$$

For example, in Fig. 3.1(c), the complete incidence matrix $A_a$ is:

Copyrighted material

$$
\begin{array}{c|cccccc}
\text{Nodes} & & & \text{Branches} & & & \\
 & 1 & 2 & 3 & 4 & 5 & 6 \\
\hline
\end{array}
$$

$$
\begin{array}{c}
1 \\ 2 \\ 3 \\ 4
\end{array}
\quad A_a = \begin{bmatrix} -1 & 1 & 1 & 0 & 0 & 0 \\ 0 & -1 & 0 & -1 & 1 & 0 \\ 0 & 0 & -1 & 1 & 0 & 1 \\ 1 & 0 & 0 & 0 & -1 & -1 \end{bmatrix}
$$

Any one row of the complete incidence matrix $A_a$ of order $(n \times b)$ can be obtained by the algebraic manipulation of other rows, as in this case the fourth row is the negative sum of the first three rows, indicating that the rows are not all independent. At least one of them can be eliminated, since it can be obtained by the negative sum of all the others. Thus the rank of $A_a$ cannot be greater than $(n-1)$; in fact it is equal to $(n-1)$.

The matrix obtained from $A_a$ by eliminating one of the rows is called the incidence matrix and is denoted by $A$ (sometimes called the reduced incidence matrix). It is of order $(n-1) \times b$. For a given graph, select a tree. In the incidence matrix, arrange the columns so that the first $(n-1)$ columns correspond to the twigs for the selected tree and the last $(b-n+1)$ columns correspond to the links. Let $A$ be obtained by eliminating the last row of $A_a$. Select the second tree of Fig. 3.2. Then, the $A$ matrix will become

$$
\begin{array}{cc}
\text{Twigs} & \text{Links} \\
\begin{array}{ccc} 2 & 4 & 5 \end{array} & \begin{array}{ccc} 1 & 3 & 6 \end{array}
\end{array}
$$

$$
A = \begin{bmatrix} 1 & 0 & 0 & -1 & 1 & 0 \\ -1 & -1 & 1 & 0 & 0 & 0 \\ 0 & 1 & 0 & 0 & -1 & 1 \end{bmatrix}
$$

$$A = [A_t \quad A_l]$$

where $A_t$ is a square matrix of order $(n-1) \times (n-1)$ and $A_l$ is a matrix of order $(n-1) \times (b-n+1)$ whose columns correspond to the links.

Here,
$$A_t = \begin{bmatrix} 1 & 0 & 0 \\ -1 & -1 & 1 \\ 0 & 1 & 0 \end{bmatrix}$$

The determinant of $A_t = 1$ and hence $|A| \neq 0$. The rank of $A$ is $n-1$. Hence, for $A_a$, the rank is $n-1$.

Copyrighted material

### 3.4 1 Properties of Complete Incidence Matrix

Each row of the incidence matrix corresponds to a node of the graph and has nonzero entries, i.e. $\pm 1$ in all those columns of the branches which are associated with that node. The entries in all other columns of that row are zero.

1. The sum of the entries in any column is zero. As every branch is associated with two nodes, every column contains exactly two non-zero entries, one of which is $+1$ and the other $-1$.
2. The rank of the complete incidence matrix of a connected graph is $(n-1)$.
3. The determinant of the complete incidence matrix of a closed loop is zero.

Let us consider the closed path *ABC* in Fig. 3.3 and tabulate its complete incidence matrix. A closed path or loop has the same number of nodes and branches.

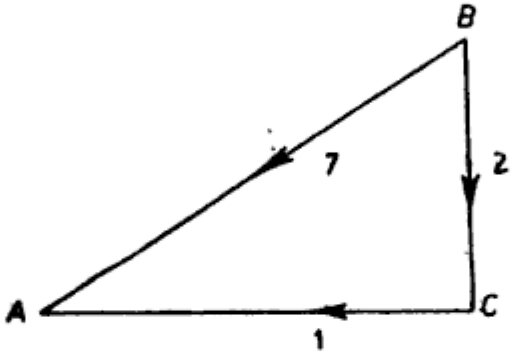


Fig. 3.3 Determinant of the incidence matrix of a closed loop is zero

| Nodes | Branches | | |
|---|---|---|---|
| | 1 | 2 | 7 |
| *A* | −1 | 0 | −1 |
| *B* | 0 | 1 | 1 |
| *C* | 1 | −1 | 0 |

The complete incidence matrix of the closed loop is a square matrix.

Now, the determinant

$$\begin{vmatrix} -1 & 0 & -1 \\ 0 & 1 & 1 \\ 1 & -1 & 0 \end{vmatrix}$$

Copyrighted material

$$= -1\begin{vmatrix} 1 & 1 \\ -1 & 0 \end{vmatrix} - 0\begin{vmatrix} 0 & 1 \\ 1 & 0 \end{vmatrix} - 1\begin{vmatrix} 0 & 1 \\ 1 & -1 \end{vmatrix}$$

$$= -1 - 0 + 1 = 0$$

Hence, the determinant of the complete incidence matrix of a closed loop is zero.

**Example 1** Draw the oriented graph from the complete incidence matrix given below.

| Nodes | Branches | | | | | |
|---|---|---|---|---|---|---|
| | 1 | 2 | 3 | 4 | 5 | 6 |
| *A* | −1 | 0 | 0 | 1 | −1 | 0 |
| *B* | 1 | −1 | 0 | 0 | 0 | −1 |
| *C* | 0 | 1 | −1 | 0 | 1 | 0 |
| *D* | 0 | 0 | 1 | −1 | 0 | 1 |

First jot down the nodes *A*, *B*, *C*, *D* as shown in Fig. 3.4. Now consider branch number 1. It appears from the complete incidence matrix entries that this branch is between the nodes *B* and *A* and it is going away from node *B* towards node *A*, as the entry against node *B* is 1 and that against *A* is −1. Hence, connect the nodes *B* and *A* by a line, point the arrow towards *A* and call it branch 1, as shown in Fig. 3.4. Similarly, draw the other oriented branches.

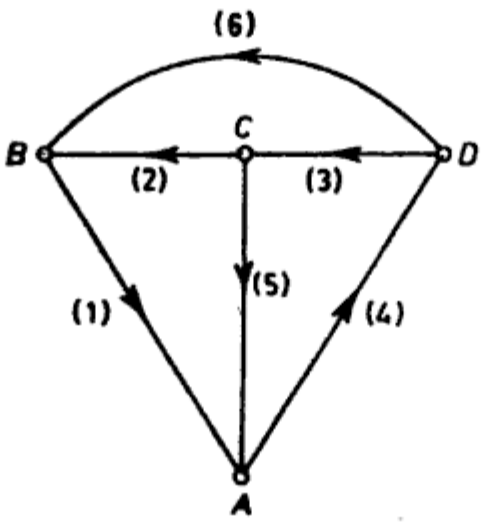


Fig. 3.4. Oriented graph of Example 1

Copyrighted material

In network analysis, two different-looking graph may have the same incidence matrix, as in Fig. 3.5, and their solutions will be the same. Two graphs are said to be isomorphic if they have the same complete incidence matrix.

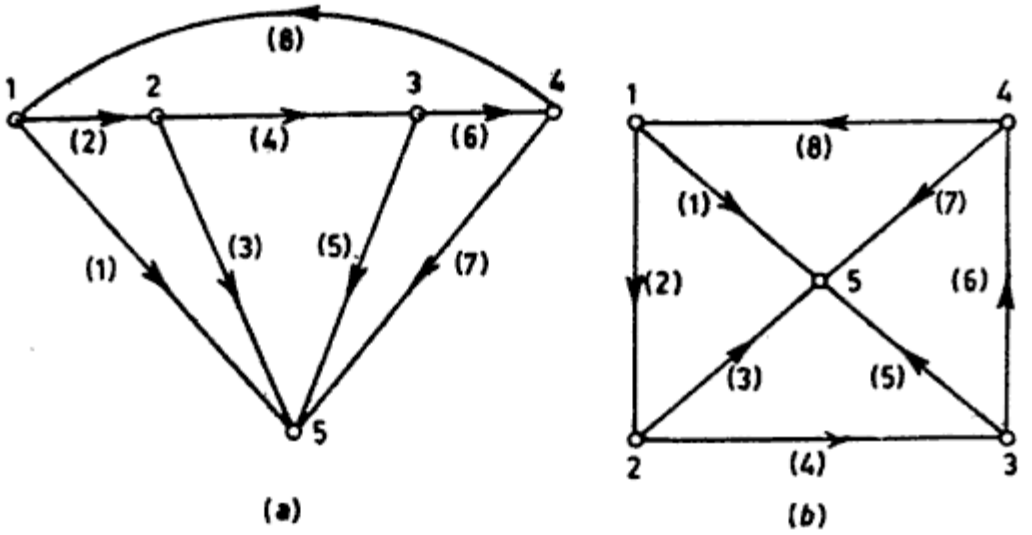


Fig. 3.5. Isomorphic graphs

This requires that they have the same number of nodes and branches and that there be a one-to-one correspondence between the nodes and a one-to-one correspondence between the branches, in a particular way that leads to the same complete incidence matrix.

When a graph is given, it is possible to tell explicitly which branches constitute which loop, mesh or closed circuit. We first endow each loop of a graph with an orientation to the loop current by a curved arrow which gives its nodes a cyclic order. To avoid cluttering the diagram, it is sometimes necessary to list the set of nodes in the chosen order. For the loops shown in Fig. 3.6, this listing would be

$$\{2, 3, 4\} \quad \text{and} \quad \{1, 2, 4, 6\}$$

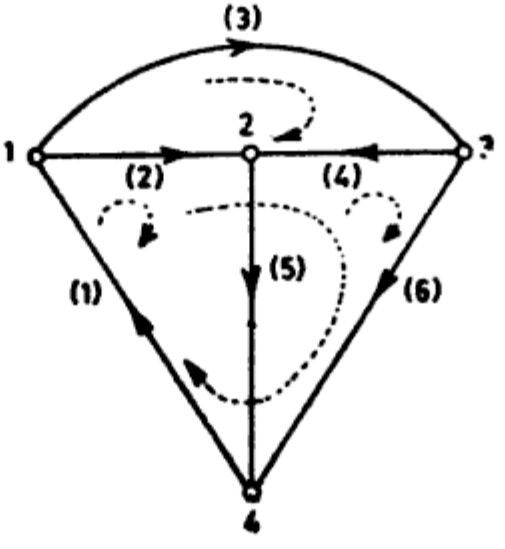


Fig. 3.6. Loop orientation

Copyrighted material

For a graph having $n$ nodes and $b$ branches, the circuit matrix $B_a$ is a rectangular matrix with $b$ columns and as many rows as there are loops. Its elements have the following values.

$b_{hk} = +1$, if branch $k$ is in loop $h$ and their orientations coincide
$= -1$, if branch $k$ is in loop $h$ and their orientations do not coincide
$= 0$, if branch $k$ is not in loop $h$

The circuit matrix is formed from the graph in Fig. 3.6. The following circuits, with ordered branches in brackets, have been considered, as given now, from which the circuit matrix $B_a$ has been formed.

*Circuit* 1: [2, 3, 4]
*Circuit* 2: [1, 2, 5]
*Circuit* 3: [4, 5, 6]
*Circuit* 4: [1, 3, 6]
*Circuit* 5: [1, 2, 4, 6]
*Circuit* 6: [5, 2, 3, 6], etc.

The circuit matrix will, therefore, be

| | Circuits | Branches | | | | | |
|---|---|---|---|---|---|---|---|
| | | 1 | 2 | 3 | 4 | 5 | 6 |
| | 1 | 0 | −1 | 1 | 1 | 0 | 0 |
| | 2 | 1 | 1 | 0 | 0 | 1 | 0 |
| | 3 | 0 | 0 | 0 | −1 | −1 | 1 |
| $B_a =$ | 4 | 1 | 0 | 1 | 0 | 0 | 1 |
| | 5 | 1 | 1 | 0 | −1 | 0 | 1 |
| | 6 | 0 | 1 | −1 | 0 | 1 | −1 |

The rank of the circuit matrix will be $b-(n-1)$. The circuit matrix thus formed is of quite a large order as the set of all loops in a graph is quite large. There is a smaller subset of this set of all circuits which will be discussed next.

Given a graph, first select a tree and remove all the links. As each link is replaced, it will form a closed loop or circuit. Circuits formed in this way will be called fundamental circuits or $f$-circuit or tie-set, in short. The orientation of an $f$-circuit will be chosen to coincide with that of its connecting link. There

Copyrighted material

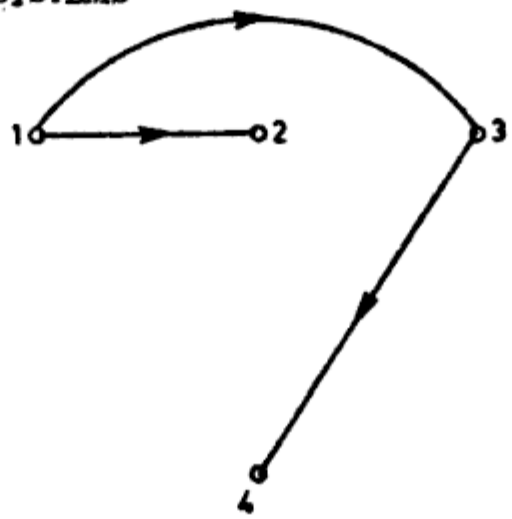


Fig. 3.7. Tree of graph

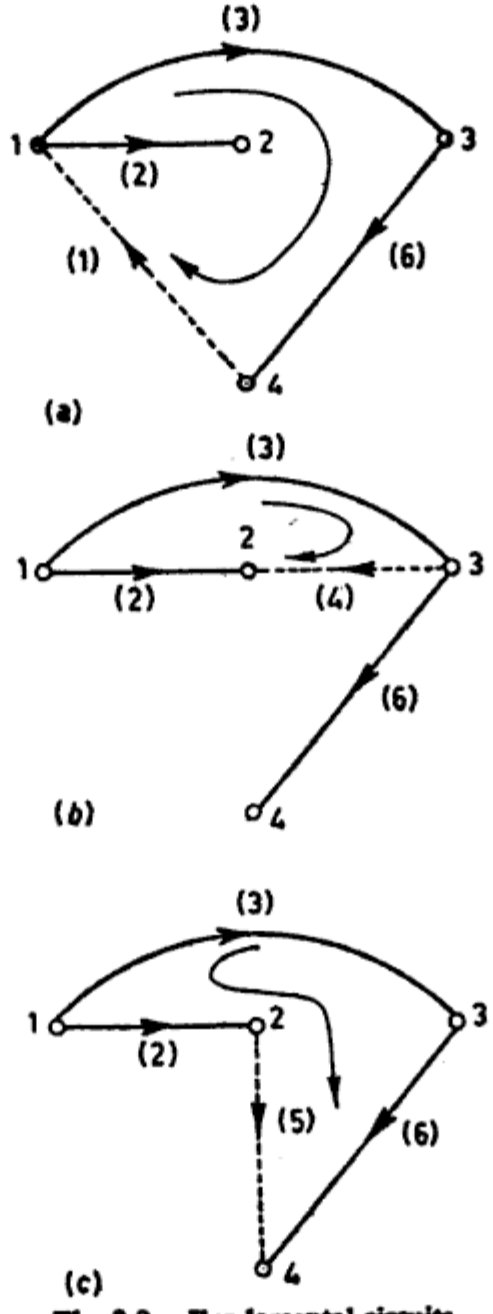


Fig. 3.8. Fundamental circuits

Copyrighted material

are as many $f$-circuits as there are links. In a graph having $b$ branches and $n$ nodes, the number of $f$-circuits or tie-sets will be $(b-n+1)$.

For the graph in Fig. 3.1(c), let the chosen tree be as in Fig. 3.7. Here, in the graph $b=6$ and $n=4$. The number of $f$-circuits or tie-sets will be $[b-(n-1)]=3$. The $f$-circuit formed when the links are replaced one at a time are shown in Fig. 3.8. The orientation of current in each $f$-circuit will be chosen to coincide with that of the corresponding connecting links. Writing the set, with link as first entry and the other branches in sequence, as

*f-circuit* 1: [1, 3, 6]; Fig. 3.8(a)
*f-circuit* 4: [4, 2, 3]; Fig. 3.8(b)
*f-circuit* 5: [5, 2, 3, 6]; Fig. 3.8(c)

The $f$-circuit or tie-set matrix will then be

$$B = \begin{array}{c} f\text{-circuits} \downarrow \\ 1 \\ 4 \\ 5 \end{array} \begin{array}{c} \text{Branches} \rightarrow \\ \begin{bmatrix} 1 & 0 & 1 & 0 & 0 & 1 \\ 0 & -1 & 1 & 1 & 0 & 0 \\ 0 & 1 & -1 & 0 & 1 & -1 \end{bmatrix} \end{array}$$

Rearranging the branches as a sequence of 145236, the tie-set matrix $B$ can be rewritten as:

| $f$-cutset | Branches | | | | | |
|---|---|---|---|---|---|---|
| | links | | | twigs | | |
| | 1 | 4 | 5 | 2 | 3 | 6 |
| 1 | 1 | 0 | 0 | 0 | 1 | 1 |
| $B=$ 4 | 0 | 1 | 0 | −1 | 1 | 1 $=[B_l, B_t]=[U, B_t]$ |
| 5 | 0 | 0 | 1 | 1 | −1 | −1 |

where $B_l$ is for links, which is $U$, the identity matrix, and $B_t$ is for twigs.

Copyrighted material

Obviously, $B$ is a non-singular matrix. Hence, the rank of $B$ is $(b-n+1)$, the number of links.

## 3.5 CUT-SET MATRIX

A cut-set is a minimal set of branches of a connected graph $G$, such that the removal of these branches from $G$ reduces the rank of $G$ by one, provided no proper subset of this set reduces the rank of $G$ by one when it is removed from $G$.

Consider the graph in Fig. 3.9(a). The rank of this graph is 3. The removal of branches 1 and 4 reduces the graph into two connected subgraphs, as in Fig. 3.9(b) and the rank, which is the addition of the ranks of two subgraphs, is 2.

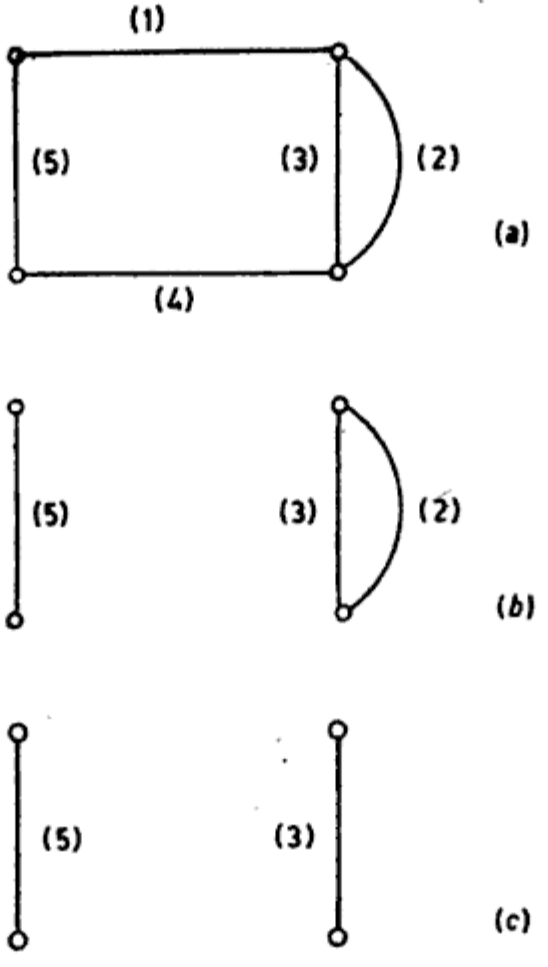


Fig. 3.9. Cut-set and improper cut-set

So [1, 4] may be a cut-set. Again, removing branches 1, 2 and 4 reduces the graph into two connected subgraphs as in Fig. 3.9(c) and the rank becomes 2. So [1, 2, 4] may be a cut-set, but [1, 4] is a subset of [1, 2, 4], So [1, 4] is the proper cut-set and not [1, 2, 4].

The cut-set is a minimal set of branches of the graph, removal of which cuts the graph into two parts. It separates the nodes of the graph into two groups, each being in one of the two parts.

Copyrighted material

Each branch of the cut-set has one of its terminals incident at a node in one group and its other end at a node in the other group. A cut-set is oriented by selecting an orientation from one of the two parts to the other. The orientation can be on the graph, as in Fig. 3.10. The orientations of the branches in a cut-set will either coincide with the cut-set orientation or they will not.

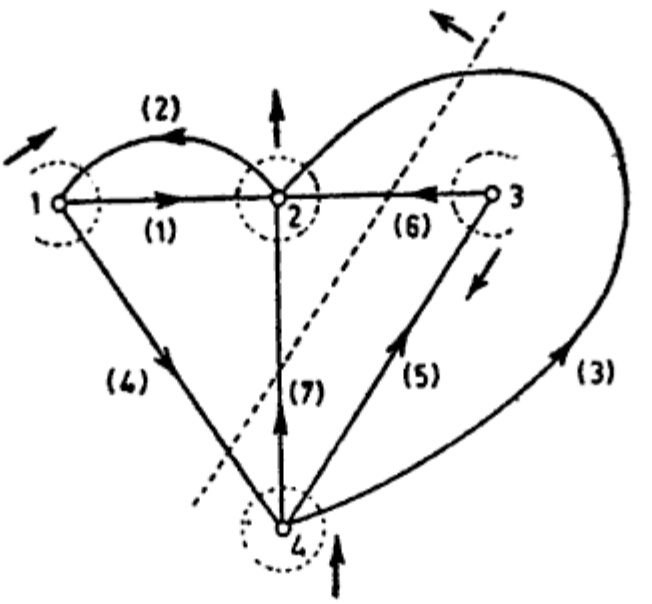


Fig. 3.10. A directed graph and some of its directed cut-sets

We define a cut-set matrix $Q_a = [q_{ij}]$ whose rows correspond to cut-sets and columns are the branches of a graph. The elements have the following values:

$q_{ij} = 1$, if branch $j$ is in the cut-set $i$, and the orientations coincide
$= -1$, if branch $j$ is in the cut-set $i$ and the orientations do not coincide
$= 0$, if branch $j$ is not in the cut-set $i$

As in the case of the circuit matrix, there may be an innumerable number of cut-sets. The cut-set matrix is formed from following cut-sets in Fig. 3.10.

*cut-set* 1: [1, 2, 4]

*cut-set* 2: [1, 2, 3, 6, 7]

*cut-set* 3: [5, 6]

*cut-set* 4: [3, 4, 5, 7]

*cut-set* 5: [3, 4, 6, 7], etc.

Copyrighted material

The cut-set matrix can be written as

$$Q_a = \begin{array}{c|ccccccc} \text{Cut-sets} \downarrow & & & \text{Branches} \rightarrow & & & & \\ & 1 & 2 & 3 & 4 & 5 & 6 & 7 \\ \hline 1 & 1 & -1 & 0 & 1 & 0 & 0 & 0 \\ 2 & -1 & 1 & -1 & 0 & 0 & -1 & -1 \\ 3 & 0 & 0 & 0 & 0 & -1 & 1 & 0 \\ 4 & 0 & 0 & 1 & -1 & 1 & 0 & 1 \\ 5 & 0 & 0 & 1 & -1 & 0 & 1 & 1 \end{array}$$

For convenience, the complete incidence matrix $A_a$ of the graph in Fig. 3.10 is written as

| Nodes | Branches | | | | | | |
|---|---|---|---|---|---|---|---|
| | 1 | 2 | 3 | 4 | 5 | 6 | 7 |
| 1 | 1 | −1 | 0 | 1 | 0 | 0 | 0 |
| 2 | −1 | 1 | −1 | 0 | 0 | −1 | −1 |
| 3 | 0 | 0 | 0 | 0 | −1 | 1 | 0 |
| 4 | 0 | 0 | 1 | −1 | 1 | 0 | 1 |

It may be noted that the complete incidence matrix is contained in the cut-set matrix in this example. A graph is said to be non-separable if its complete incidence matrix is contained in the cut-set matrix.

In the graph shown in Fig. 3.11, cutting the set of branches incident at node 1 will separate the graph into three parts, of which the isolated node 1 will be one part. So this set of branches [1, 4, 5, 6] is not a cut-set

The cut-set matrix $Q_a$ of a graph is seen to have more rows than its complete incidence matrix. The question of the rank of the cut-set matrix then arises. Hence comes the fundamental cut-set matrix, in short *f*-cut-set matrix.

Given a connected graph, first select a tree and focus on a twig $b_k$ of the tree. Removing this twig from the tree disconnects the tree into two pieces. All the links which go from one part of this disconnected tree to the other, together with $b_k$ will constitute a cut-set. We call this a fundamental cut-set,

Copyrighted material

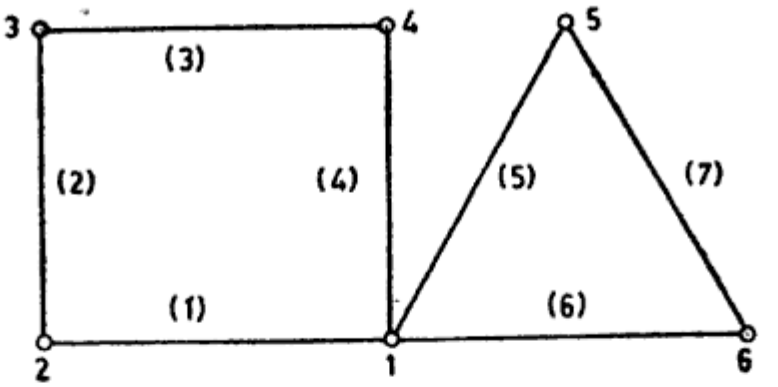


Fig. 3.11 Set of branches [1, 4, 5, 6] is not a cut-set

or *f*-cut-set in short. For each branch of the tree, there will be a *f*-cut-set. So, for a graph having *n*-nodes, there will be $(n-1)$ twigs of a tree, and $(n-1)$ number of *f*-cut-set will exist. The direction of a *f*-cut-set is chosen to coincide with that of the branch of the tree defining the cut-set. It follows from the definition that each *f*-cut-set contains at least one edge (that branch of the tree corresponding to which the *f*-cut-set is defined) which is not contained in the other *f*-cut-set. The $(n-1)$ *f*-cut-sets defined with respect to a tree are linearly independent.

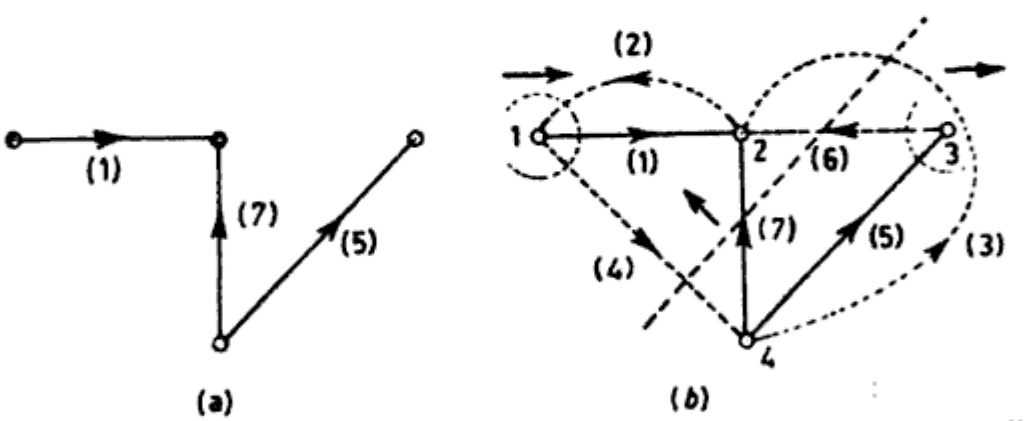


Fig. 3.12. Fundamental cut-set (a) a tree of graph of Fig. 3.10
(b) *f*-cut-set corresponding to the tree

The fundamental cut-set matrix $Q$ is one in which each row represents a *f*-cut-set with respect to a given tree of the graph.

Consider the tree in Fig. 3.12(a) of the graph in Fig 3.10. The *f*-cut-sets are as shown in Fig. 3.12 (b)

*f*-cut-set *1*: [1, 2, 4]
*f*-cut-set *5*: [5, 6]
*f*-cut-set *7*: [7, 3, 4, 6]

Copyrighted material

from which $f$-cut-set matrix $Q$ can be written as

$$Q = \begin{array}{c|ccccccc} f\text{-cut-set} & \multicolumn{7}{c}{\text{Branches}} \\ & 1 & 2 & 3 & 4 & 5 & 6 & 7 \\ \hline 1 & 1 & -1 & 0 & 1 & 0 & 0 & 0 \\ 5 & 0 & 0 & 0 & 0 & 1 & -1 & 0 \\ 7 & 0 & 0 & 1 & -1 & 0 & 1 & 1 \end{array}$$

If branches are arranged as a sequence 1572346, the $f$-cut-set $Q$ can be written as

$$Q = \begin{array}{c|ccc|cccc} & \multicolumn{7}{c}{\text{Branches}\rightarrow} \\ & \multicolumn{3}{c|}{\text{Twigs}} & \multicolumn{4}{c}{\text{Links}} \\ f\text{-cut-set} & 1 & 5 & 7 & 2 & 3 & 4 & 6 \\ \hline 1 & 1 & 0 & 0 & -1 & 0 & 1 & 0 \\ 5 & 0 & 1 & 0 & 0 & 0 & 0 & -1 \\ 7 & 0 & 0 & 1 & 0 & 1 & -1 & -1 \end{array} = [Q_t, Q]_l = [U, Q_l]$$

The rank of $Q$ cannot to be greater than $(n-1)$ as the number of branches in a tree is $(n-1)$ of a graph having $n$ vertices. In fact, the rank of $Q$ is $(n-1)$ as $Q_t = U$, the identity matrix.

It is to be noted that there are exactly $(n-1)$ rows in $Q$, one for each $f$-cut-set, with respect to a given tree. Also, the columns corresponding to tree branches have only one non-zero entry, which is 1. Therefore, these columns can be rearranged to consititute an identity matrix. Thus, the rank of the cut-set matrix $Q_a$ of a connected graph is at least $(n-1)$.

The set of edges [7, 1, 2, 3, 6] seems to be a $f$-cut-set with twig 7, but the set of edges [7, 3, 4, 6] is another set of edges with twig 7 to claim as $f$-cut-set. Of these two, the latter has the minimal set of edges, and hence the set of edges [7, 3, 4, 6] is a proper $f$-cut-set to be considered.

The $f$-cut-set matrix $Q = [q_{ij}]$ has one row for each $f$-cut-set of the graph and one column for each edge, such that

$q_{ij} = 1$, if edge $j$ is in $f$-cut-set $i$ and the direction of edge $j$ coincides with that of the $f$-cut-set $i$.

Copyrighted material

$= -1$, if edge $j$ is in $f$-cut-set $i$ but the direction of edge $j$ does *not* coincide with that of $f$-cut-set $i$

$= 0$, if edge $j$ is not in $f$-cut-set $i$

The $f$-cut-sets with respect to the tree in Fig. 3.12 are

$$[1, 2, 4], \quad [6, 5], \quad [7, 3, 4, 6]$$

writing the tree number as the first entry to indicate the $f$-cut-set corresponding to the branch of the tree, with the direction of the $f$-cut-set aligned with the direction of the branch of the tree. Each $f$-cut-set has a set of edges consisting of one branch of the tree and the minimum number of links. Thus, for $f$-cut-set 1 with the set of edges [1, 2, 4], the entry in $Q$ corresponding to twig 1 in Fig. 3.12 is $+1$, as the direction of the $f$-cut-set is in accordance with the direction of twig 1. The entry corresponding to branch 2 is $-1$ as the direction of branch 2 is in opposition to the direction of the $f$-cut-set, i.e. in opposition to twig 1. Similarly, for branch 4, the entry is $+1$. In the same way the entry of other $f$-cut-sets can be justified.

From the cut-set matrix we can write equations giving the branch voltages, in terms of the tree-branch voltages, by simply reading the columns of the cut-set matrix. The cut-set matrix provides a compact and effective means for writing algebraic equations giving branch voltages in terms of tree-branch voltages.

$$V_b = Q_a^T V_t$$

and

$$V_b = A_a^T V_t$$

Eliminating one node by considering the datum node, the branch voltage matrix can be expressed in terms of the node-voltage matrix as

$$V_b = Q^T V_n$$

and

$$V_b = A^T V_n \tag{1}$$

## 3.6 TIE-SET MATRIX AND LOOP CURRENTS

The tie-set matrix is denoted by $B$. If $I_b$ and $I_L$ represent the branch current matrix and loop current matrix, respectively, then

$$[I_b] = [B^T]\,[I_L] \tag{2}$$

where $[B^T]$ is the transpose of the matrix $[B]$

EXAMPLE 2 Consider the network shown in Fig. 3.13(a). Determine the branch current in terms of the loop current, for a tree of your choice.

The directed graph is shown in Fig. 3.13(b) and the tree is in Fig. 3.13(c). The twigs are [1, 2, 3, 4] and links [5, 6, 7, 8]. The number of loops = 4.

Then, loop currents $[i_5, i_6, i_7, i_8]$ should coincide with the direction of the corresponding links.

Copyrighted material

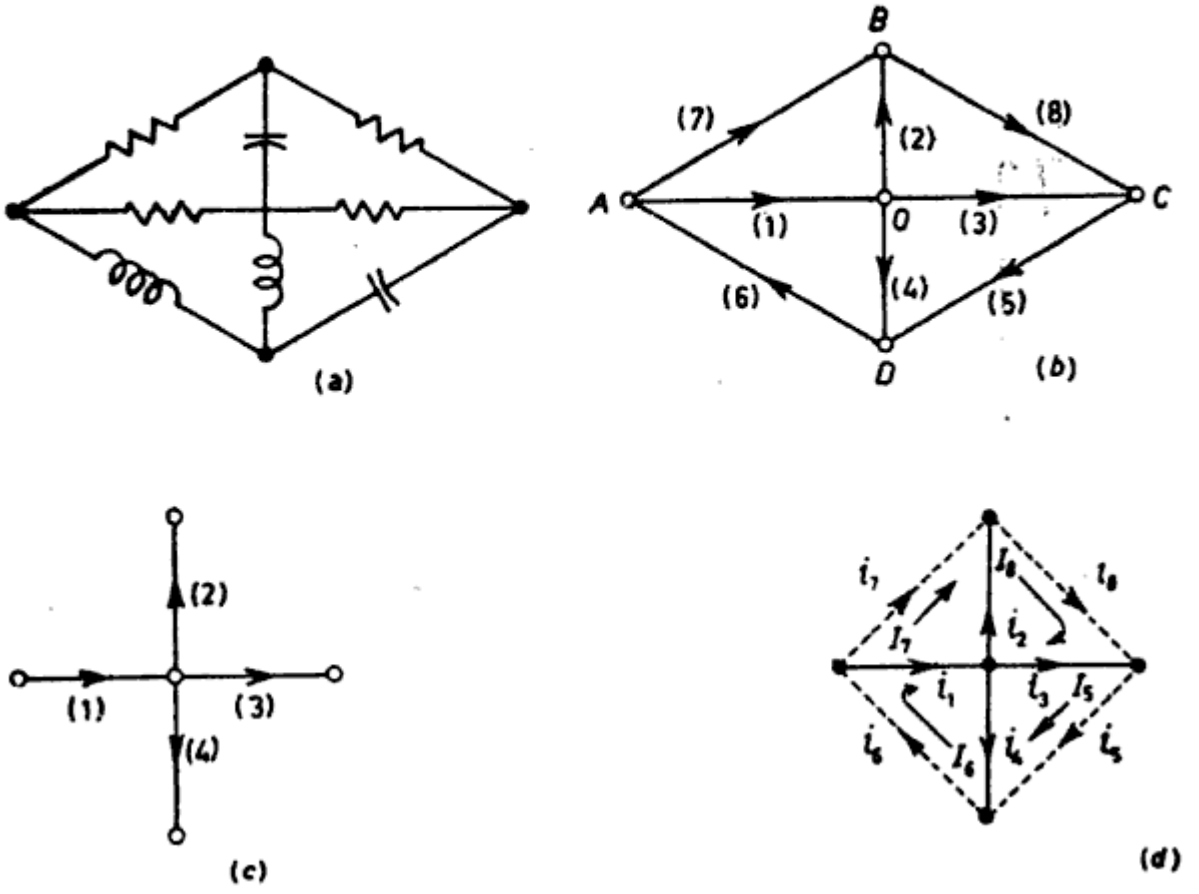


Eig. 3.13 (a) Network of Example 2.
(b) directed graph of the network
(c) a tree of the graph
(d) tie set matrix of the graph.

The tie-set matrix $[B]$ is of the order of $(4 \times 8)$, as shown below:

| Loop current or Link current | Branch currents | | | | | | | |
|---|---|---|---|---|---|---|---|---|
| | 1 | 2 | 3 | 4 | 5 | 6 | 7 | 8 |
| 5 | 0 | 0 | 1 | −1 | 1 | 0 | 0 | 0 |
| 6 | 1 | 0 | 0 | 1 | 0 | 1 | 0 | 0 |
| 7 | −1 | −1 | 0 | 0 | 0 | 0 | 1 | 0 |
| 8 | 0 | 1 | −1 | 0 | 0 | 0 | 0 | 1 |

Copyrighted material

$$B = \begin{bmatrix} 0 & 0 & 1 & -1 & 1 & 0 & 0 & 0 \\ 1 & 0 & 0 & 1 & 0 & 1 & 0 & 0 \\ -1 & -1 & 0 & 0 & 0 & 0 & 1 & 0 \\ 0 & 1 & -1 & 0 & 0 & 0 & 0 & 1 \end{bmatrix}$$

The branch current matrix $[I_b]$ is a column vector,

$$[I_b]^T = [i_1\ i_2\ i_3\ i_4\ i_5\ i_6\ i_7\ i_8]$$

The loop current matrix $[I_L]$ is column vector,

$$[I_L]^T = = [I_5\ I_6\ I_7\ I_8]$$

Therefore, $I_b = B^T I_L$

$$\begin{bmatrix} i_1 \\ i_2 \\ i_3 \\ i_4 \\ i_5 \\ i_6 \\ i_7 \\ i_8 \end{bmatrix} = \begin{bmatrix} 0 & 1 & -1 & 0 \\ 0 & 0 & -1 & 1 \\ 1 & 0 & 0 & -1 \\ -1 & 1 & 0 & 0 \\ 1 & 0 & 0 & 0 \\ 0 & 1 & 0 & 0 \\ 0 & 0 & 1 & 0 \\ 0 & 0 & 0 & 1 \end{bmatrix} \begin{bmatrix} \\ \\ \\ \\ \\ I_7 \\ I_8 \end{bmatrix}$$

which gives the branch currents in terms of loop currents as

$$i_1 = I_6 - I_7$$
$$i_2 = -I_7 + I_8$$
$$i_3 = I_5 - I_8$$
$$i_4 = -I_5 + I_6$$
$$i_5 = I_5$$
$$i_6 = I_6$$
$$i_7 = I_7$$
$$i_8 = I_8$$

## 3.7 NUMBER OF POSSIBLE TREES OF A GRAPH

The number of possible trees of a graph = det $\{[A]\,[A]^T\}$, where $A$ is the reduced incidence matrix obtained by removing any one row from the complete

Copyrighted material

incidence matrix $A_a$ and $[A]^T$ is the transpose of the matrix $[A]$. The order of $A$ is $(n-1)\times b$, where $n$ is the number of nodes and $b$ the number of branches of the graph.

For example in Fig. 3.4, $A$ may be obtained by removing the fourth row from $A_a$, as:

$$A = \begin{bmatrix} -1 & 0 & 0 & 1 & -1 & 0 \\ 1 & -1 & 0 & 0 & 0 & -1 \\ 0 & 1 & -1 & 0 & 1 & 0 \end{bmatrix}$$

$$[A]^T = \begin{bmatrix} -1 & 1 & 0 \\ 0 & -1 & 1 \\ 0 & 0 & -1 \\ 1 & 0 & 0 \\ -1 & 0 & 1 \\ 0 & -1 & 0 \end{bmatrix}$$

Hence, the number of all possible trees of the graph of Fig. 3.4

$$= \det \left\{ \begin{bmatrix} -1 & 0 & 0 & 1 & -1 & 0 \\ 1 & -1 & 0 & 0 & 0 & -1 \\ 0 & 1 & -1 & 0 & 1 & 0 \end{bmatrix} \begin{bmatrix} -1 & 1 & 0 \\ 0 & -1 & 1 \\ 0 & 0 & -1 \\ 1 & 0 & 0 \\ -1 & 0 & 1 \\ 0 & -1 & 0 \end{bmatrix} \right\}$$

$$= \det \begin{bmatrix} 3 & -1 & -1 \\ -1 & 3 & -1 \\ -1 & -1 & 3 \end{bmatrix} = 3\times 8 + 1(-4) - 1 \times 4 = 16$$

So, the total possible number of trees from the graph of Fig. 3.4 is 16.

## 3.8 ANALYSIS OF NETWORKS

The object is to set up a system of equations from which the independent loop currents can be determined, for, as mentioned already, once this set of currents is known, the currents in all the branches can be calculated. To do this, we assign quite arbitrarily, to each of the $b$ branches, a positive direction for

Copyrighted material

current flow. The direction assigned to each branch of the cotree determines a positive sense of current circulation for the corresponding loop. We number the loops from 1 to $l$ and the branches from 1 to $b$, and we define a matrix $B$ of order $l \times b$ having elements $b_{hk}$ as

$b_{hk} = +1$, if the positive sense of current flow in branch $k$ coincides with that of loop $h$

$= -1$, if the positive sense of current flow in branch $k$ is opposite to that of loop $h$

$= 0$, if branch $k$ is not associated with loop $h$

The matrix $B$ is known as the tie-set matrix and it specifies completely and uniquely the way in which various branches are interconnected to form a set of independent loops. Row $h$ of $B$ contains non-zero entries only in places whose column numbers correspond to branches forming part of loop $h$. A glance at row $h$, therefore, tells us at once exactly which branches form loop $h$.

**Kirchhoff's Voltage Law**

Kirchhoff's voltage law states that if $v_k$ is the potential drop in the $k$th branch, then

$$\Sigma\, v_k = 0$$

the sum being taken over all the branches in a given loop. There are, consequently, $l$ such equations, one for each loop. It is easily seen that the equation for loop $h$ is

$$\sum_{k=1}^{b} b_{hk} V_k = 0, \quad (h = 1, 2, \ldots, l) \tag{3}$$

so that the set of $l$ equations can be written in matrix form

$$B[V_b] = 0 \tag{4}$$

where $V_b = [v_1, v_2, \ldots, v_b]^T$ and $B$ is the fundamental circuit matrix.

Now, if $v_{sk}$ is the branch input voltage source, $i_k$ the current, and $z_k$ the impedance of the $k$th branch

$$v_k = z_k i_k - v_{sk} \qquad (k = 1, 2, \ldots, b) \tag{5}$$

In the matrix form,

$$\begin{bmatrix} v_1 \\ v_2 \\ \cdot \\ v_b \end{bmatrix} = \begin{bmatrix} z_1 & 0 & \ldots & 0 \\ 0 & z_2 & \ldots & 0 \\ \cdot & \cdot & \ldots & \cdot \\ 0 & 0 & \ldots & z_b \end{bmatrix} \begin{bmatrix} i_1 \\ i_2 \\ \cdot \\ i_b \end{bmatrix} - \begin{bmatrix} v_{s1} \\ v_{s2} \\ \cdot \\ v_{sb} \end{bmatrix} \tag{6}$$

The matrix $[Z_b]$ is diagonal.

If, however, the circuit contains inductances so that there is coupling between branches, this matrix is no longer diagonal. If $z_{kk}$ is the self-impedance of branch $k$, and $z_{kh} = z_{hk}$ is the mutual impedance of branches $h$ and $k$, then

Copyrighted material

$$v_k = \sum_{h=1}^{b} z_{kh}\, i_k - v_{sk};\ (k = 1, 2, \ldots, b) \tag{7}$$

or,

$$\begin{bmatrix} v_1 \\ v_2 \\ \cdot \\ v_b \end{bmatrix} = \begin{bmatrix} z_{11} & z_{12} & \cdots & z_{1b} \\ z_{21} & z_{22} & \cdots & z_{2b} \\ \cdot & \cdot & \cdots & \cdot \\ z_{b1} & z_{b2} & \cdots & z_{bb} \end{bmatrix} \begin{bmatrix} i_1 \\ i_2 \\ \cdot \\ i_b \end{bmatrix} - \begin{bmatrix} v_{s1} \\ v_{s2} \\ \cdot \\ v_{sb} \end{bmatrix} \tag{8}$$

This may be written as

$$[V_b] = [Z_b][I_b] - [V_s] \tag{9}$$

where the impedance matrix $[Z_b]$ is symmetric.
Hence, using Eq. (4), we get

$$[B][V_b] = [0] = [B][Z_b][I_b] - [B][V_s] \tag{10}$$

Let the loop current vector $I_L$ be written as

$$I_L = [I_1\ I_2\ I_3\ \ldots\ I_l]^T$$

Then, the current flowing through a branch common to two loops is either the sum or the difference of the two loop currents (with sign convention). The current flowing through a branch which forms part of only one loop is either plus or minus the loop current. Clearly, from Eq. (2), we get

$$i_k = b_{1k} I_1 + b_{2k} I_2 + \ldots + b_{lk} I_l\ (k = 1, 2, \ldots, b) \tag{11}$$

This set of $b$ equations can be rewritten in matrix form as

$$[I_b] = [B^T][I_L] \tag{12}$$

where, $I_L$ is the loop current vector and $B^T$ is the transpose of $B$.

The branch current vector

$$[I_b] = [i_1, i_2, \ldots, i_b]^T.$$

Let $E_1, E_2, \ldots, E_l$ be the loop emf's. Then, $E_h$ is the algebraic sum of the branch emf's for these branches forming loop $h$. Thus,

$$E_h = \sum_{k=1}^{b} b_{hk}\, v_{sk};\ (h = 1, 2, l)$$

In the matrix form, we can write

$$E = BV_s \tag{13}$$

where $E^T = [E_1, E_2, \ldots, E_l]$

Substituting in Eq. (10) and using Eq. (12), we get from Eq. (13)

$$[E] = [B]\,[Z_b]\,[B]^T\,[I_L] \tag{14}$$

$[B][Z_b][B]^T$ is a square matrix of order $l \times l$. Denoting this by $Z$ we have

$$[E] = [Z]\,[I] \tag{15}$$

$[Z]$ is clearly a symmetric matrix since $z_{hk} = z_{kh}$, and it is known as the loop

Copyrighted material

impedance matrix. Equation (15) is Kirchhoff's voltage law (KVL).

In the above analysis, any branch may be a series connection of resistances, inductances and capacitances. The impedance matrix $[Z]$ will, however, assume a much, simpler form if we consider each passive element as a separate branch. Thus, a branch consisting of a series connection of $R, L, C$ is replaced by three branches; one, a pure resistance $R$, one a pure inductance $L$, and one a pure capacitance $C$. Let us suppose that the new set of $b$-branches consist of $x$ number of inductances, $y$-number of resistances and $z$-number of capacitances. The numbering of the branches was completely arbitrary and we may, without loss of generality, first number all the inductance branches consecutively from 1 to $x$, then all resistance branches from $x+1$ to $x+y$, and finally all the capacitance branches from $x+y+1$ to $x+y+z(=b)$. Now, in Eq. (10), $z_{hk}$ $(h \neq k)$ is the mutual impedance of branches $h$ and $k$. This is zero unless these branches contain inductances. Thus, in this case,

$$z_{hk} = 0 \ (h \neq k)$$

unless $1 \leqslant h \leqslant x$ and $1 \leqslant k \leqslant x$.

However, in this range, $z_{hk} = sL_{hk}$, where $s$ has its usual meaning (and is equal to $j\omega$ for steady-state quantities), $L_{hk}(h \neq k)$ is the mutual inductance of branch $h$ and $k$, and $L_{hh}$ is the self inductance of branch $h$. We therefore have, for the inductance branches,

$$\begin{bmatrix} v_1 \\ v_2 \\ \cdot \\ v_x \end{bmatrix} = s \begin{bmatrix} L_{11} & L_{12} & \dots & L_{1x} \\ L_{21} & L_{22} & \dots & L_{2x} \\ \cdot & \cdot & \dots & \cdot \\ L_{x1} & L_{x2} & \dots & L_{xx} \end{bmatrix} \begin{bmatrix} i_1 \\ i_2 \\ \cdot \\ i_x \end{bmatrix} - \begin{bmatrix} v_{s1} \\ v_{s2} \\ \cdot \\ v_{sx} \end{bmatrix} \tag{16}$$

The $(x \times x)$ symmetric matrix $L_{hk}$ is called the branch inductance matrix.

Similarly, for the resistance branches for which

$$z_{hk} = 0, \ (h \neq k, \ x < h \leqslant x+y, \ x \leqslant k \leqslant x+y)$$

and $\qquad z_{hh} = R_h$, the resistance of branch $h(x \leqslant h \leqslant x+y)$

$$\begin{bmatrix} v_{x+1} \\ v_{x+2} \\ \cdot \\ v_{x+y} \end{bmatrix} = \begin{bmatrix} R_{x+1} & 0 & \dots & 0 \\ 0 & R_{x+2} & \dots & 0 \\ \cdot & \cdot & \dots & \cdot \\ 0 & 0 & \dots & R_{x+y} \end{bmatrix} \begin{bmatrix} i_{x+1} \\ i_{x+2} \\ \cdot \\ i_{x+y} \end{bmatrix} - \begin{bmatrix} v_{s(x+1)} \\ v_{s(x+2)} \\ \cdot \\ v_{s(x+y)} \end{bmatrix} \tag{17}$$

For the capacitance branches

$$z_{hk} = 0 \ (h \neq k, \ x+y \leqslant h \leqslant b, \ x+y < k \leqslant b)$$

and $\qquad z_{hh} = \left(\frac{1}{s}\right) C_{hh}^{-1}, \ (x+y \leqslant h \leqslant b)$

where $C_{hh}$ is the capacitance of branch $h$. Then,

Copyrighted material

$$\begin{bmatrix} v_{x+y+1} \\ v_{x+y+2} \\ \\ v_b \end{bmatrix} = (1/s) \begin{bmatrix} C_{x+y+1}^{-1} & 0 & \dots & 0 \\ 0 & C_{x+y+2}^{-1} & \dots & 0 \\ \cdot & \cdot & \dots & \cdot \\ 0 & \cdot & \dots & C_b^{-1} \end{bmatrix} \begin{bmatrix} i_{x+y+1} \\ i_{x+y+2} \\ \cdot \\ i_b \end{bmatrix} - \begin{bmatrix} v_{s(x+y+1)} \\ v_{s(x+y+2)} \\ \cdot \\ v_{sb} \end{bmatrix} \quad (18)$$

If we write the branch input voltage source vector $V_{sb}$ in partitioned form as

$$V_s^{(x)} = [v_{s1}, v_{s2}, \dots, v_{sx}]^T \text{ of order } (x \times 1)$$

$$V_s^{(y)} = [v_{s(x+1)}, v_{s(x+2)}, \dots, v_{s(x+y)}]^T \text{ of order } (y \times 1)$$

$$V_s^{(z)} = [v_{s(x+y+1)}, v_{s(x+y+2)}, \dots, v_{sb}]^T \text{ of order } (z \times 1)$$

and similarly for branch voltage vector $V_b$ in partitioned form as

$$V^{(x)} = [v_1, v_2, \dots, v_x]^T$$

$$V^{(y)} = [v_{x+1}, v_{x+2}, \dots, v_{x+y}]^T$$

$$V^{(z)} = [v_{x+y+1}, v_{x+y+2}, \dots, v_b]^T$$

and for branch current vector $I_b$ in partitioned form as

$$i^{(x)} = [i_1, i_2, \dots, i_x]^T \text{ of order } (x \times 1)$$

$$i^{(y)} = [i_{x+1}, i_{x+2}, \dots, i_{x+y}]^T \text{ of order } (y \times 1)$$

$$i^{(z)} = [i_{x+y+1}, i_{x+y+2}, \dots, i_b]^T \text{ of order } (z \times 1)$$

The three equations (16), (17) and (18) can be combined and written in partitioned form as

$$\begin{bmatrix} V^{(x)} \\ V^{(y)} \\ V^{(z)} \end{bmatrix} = \begin{bmatrix} sL & & 0 \\ & R & \\ 0 & & 1/sC \end{bmatrix} \begin{bmatrix} i^{(x)} \\ i^{(y)} \\ i^{(z)} \end{bmatrix} - \begin{bmatrix} V_s^{(x)} \\ V_s^{(y)} \\ V_s^{(z)} \end{bmatrix} \quad (19)$$

where, $sL$, $R$ and $1/sC$ are of orders $(x \times x)$, $(y \times y)$ and $(z \times z)$, respectively; the first being symmetric and the others are diagonal matrices. The zeros are all zero matrices of appropriate order. If matrix $B$ is constructed as before, we have from Eq. (14),

$$E = B \begin{bmatrix} sL & 0 & 0 \\ 0 & R & 0 \\ 0 & 0 & 1/sC \end{bmatrix} B^T I_L = Z I_L \quad (20)$$

If $B_{(x)}$, $B_{(y)}$, $B_{(z)}$ are matrices formed by the first $x$, the next $y$ and the final $z$ columns of the $(l \times b)$ matrix $B$, we can partition $B$ and write

Copyrighted material

$$Z = [B_{(x)}, B_{(y)}, B_{(z)}] \begin{bmatrix} sL & 0 & 0 \\ 0 & R & 0 \\ 0 & 0 & 1/sC \end{bmatrix} \begin{bmatrix} B^T_{(x)} \\ B^T_{(y)} \\ B^T_{(z)} \end{bmatrix}$$

$$= s\, B_{(x)}\, L\, B^T_{(x)} + B_{(y)}\, R\, B^T_{(y)} + B_{(z)} \frac{1}{sC} B^T_{(z)} \tag{21}$$

where $L$, $R$ and $1/C$ are called the loop inductance, resistance and elastance matrices, respectively.

EXAMPLE 3 Take the case of a network consisting of three resistors, three inductors and three capacitors. It is assumed that each branch of the network contains only one element, which may be a resistance, inductance or capacitance.

Let the branches consisting of inductors be numbered 1, 2, 3 those consisting of resistors 4, 5, 6, and those consisting of capacitors 7, 8, 9. Then, the branch impedance matrix $Z_b$ can be written as

$$\begin{bmatrix} sL_{11} & sL_{12} & sL_{13} & 0 & 0 & 0 & 0 & 0 & 0 \\ sL_{21} & sL_{22} & sL_{23} & 0 & 0 & 0 & 0 & 0 & 0 \\ sL_{31} & sL_{32} & sL_{33} & 0 & 0 & 0 & 0 & 0 & 0 \\ 0 & 0 & 0 & R_4 & 0 & 0 & 0 & 0 & 0 \\ 0 & 0 & 0 & 0 & R_5 & 0 & 0 & 0 & 0 \\ 0 & 0 & 0 & 0 & 0 & R_6 & 0 & 0 & 0 \\ 0 & 0 & 0 & 0 & 0 & 0 & 1/sC_7 & 0 & 0 \\ 0 & 0 & 0 & 0 & 0 & 0 & 0 & 1/sC_8 & 0 \\ 0 & 0 & 0 & 0 & 0 & 0 & 0 & 0 & 1/sC_9 \end{bmatrix} \tag{22}$$

The branch admittance matrix, denoted by $Y_b$ can be written as

$$Y_b = [Z_b]^{-1} = \begin{bmatrix} sL_b & 0 & 0 \\ 0 & R_b & 0 \\ 0 & 0 & \dfrac{1}{sC_b} \end{bmatrix}^{-1} = \begin{bmatrix} [sL_b]^{-1} & 0 & 0 \\ 0 & [R_b]^{-1} & 0 \\ 0 & 0 & \left[\dfrac{1}{sC_b}\right]^{-1} \end{bmatrix}$$

$$\begin{bmatrix} Y_{11} & \cdots & \cdots & Y_{19} \\ \cdots & \cdots & \cdots & \cdots \\ Y_{91} & \cdots & \cdots & Y_{99} \end{bmatrix}$$

Copyrighted material

where,

$$sL_b = \begin{bmatrix} sL_{11} & sL_{12} & sL_{13} \\ sL_{21} & sL_{22} & sL_{23} \\ sL_{31} & sL_{32} & sL_{33} \end{bmatrix}$$

$$R_b = \begin{bmatrix} R_4 & 0 & 0 \\ 0 & R_5 & 0 \\ 0 & 0 & R_6 \end{bmatrix}$$

$$\frac{1}{sC_b} = \begin{bmatrix} \frac{1}{sC_7} & 0 & 0 \\ 0 & \frac{1}{sC_8} & 0 \\ 0 & 0 & \frac{1}{sC_9} \end{bmatrix}$$

$Y_{ii}$ is the self admittance of branch $i$, and $y_{ik}$ the mutual admittance branches $i$ and $k$.

**Kirchhoff's Current Law**

We are going to discuss the KCL equation of the network having only current source as input. Now, Kirchhoff's current law states that if $i_k$ is the current in the $k$th branch, then at a given node, we have

$$\Sigma i_k = 0 \tag{23}$$

The sum being taken over all the branches incident at a given node. There are, conseqently, $n$ such equations, one for each node. It is easily seen that the equation $h$ is

$$\sum_{k=1}^{b} a_{hk}\, i_k = 0;\ h = 1, 2, \ldots\ldots, n \tag{24}$$

so that set of $n$ equations can be written in matrix form as

$$A_a\, I_b = 0 \tag{25}$$

where $$I_b = [i_1, i_2, \ldots, i_b]^T$$

and $A_a$ is the complete incidence matrix. This can be written in reduced order as

$$A\, I_b = 0 \tag{26}$$

where $A$ is the incidence matrix of order $(n-1) \times b$. In the same way, for $f$-cut-set matrix, we get

$$Q\, I_b = 0 \tag{27}$$

Copyrighted material

If $i_{sk}$ is the input current source and $y_k$ the admittance of the $k$th branch, then

$$i_k = y_k\, v_k - i_{sk};\ k = 1, 2, \ldots, b \tag{28}$$

In the matrix form, we get

$$I_b = Y_b\, V_b - I_s \tag{29}$$

The matrix $Y_b$ is diagonal.

If, however, the circuit contains inductances so that there is coupling between branches, then $Y_b$ is no longer diagonal. $y_{kk}$ is the self admittance of branch $k$, and $y_{hk} = y_{kh}$ is the mutual admittance of branches $h$ and $k$.

The columns of the incidence matrix will give the branch voltages in terms of node voltages

$$V_b = A^T\, V_n \tag{30}$$

The same result holds for $f$-cut-set matrix also

$$V_b = Q^T\, V_n \tag{31}$$

Using Eq. (30) in Eq. (29), we get

$$I_b = Y_b\, V_b - I_s$$

$$I_b = Y_b\, A^T\, V_n - I_s \tag{32}$$

Again, from Eq. (26), we get

$$A\, I_b = 0$$

Putting $I_b$ from Eq. (32), we get

$$A\,[Y_b\, A^T\, V_n - I_s] = 0$$

or,

$$Y\, V = I \tag{33}$$

where the admittance matrix,

$$Y = A Y_b\, A^T \tag{34}$$

is of order $(n-1)\times(n-1)$ symmetric matrix and

$$I = A\, I_s \tag{35}$$

Eq. (33) is Kirchhoff's current law.

## 3.9 NETWORK EQUILIBRIUM EQUATION

The procedure for drawing the graph of any network can be illustrated as follows. The graph of a planer network is drawn by keeping all points of intersection of two or more branches, i.e. nodes, and representing the network elements by lines, voltage and current sources by their internal impedances. The internal impedance of an ideal voltage source is zero and is to be replaced by short circuit, and that of an ideal current source is infinite and hence to be replaced by an op circuit. Consider the network of Fig. 3.14(a). In order to draw the graph, proceed in the following way:

Copyrighted material

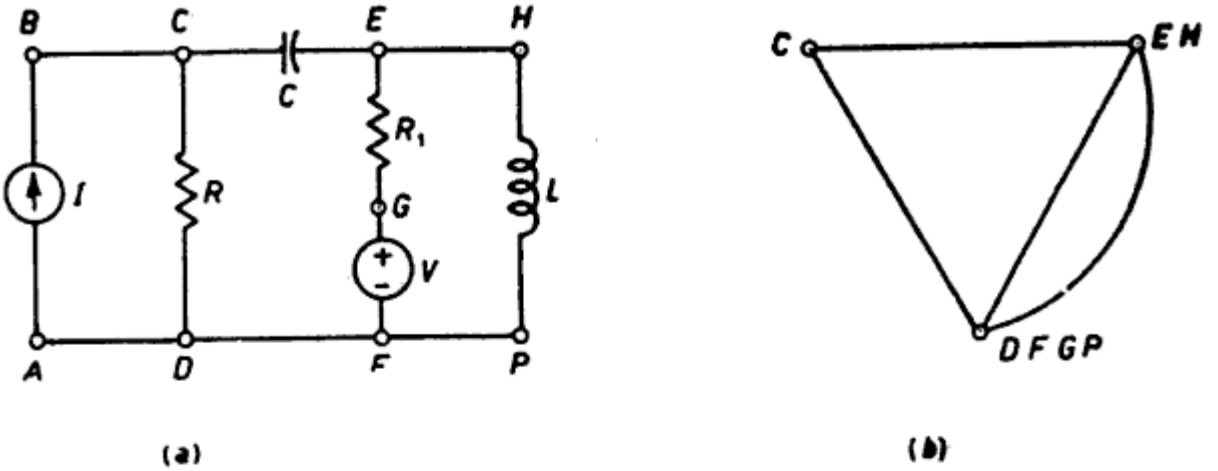


Fig. 3.14. (a) Network (b) graph

(i) Current source $I$ is replaced by an open circuit, hence line $AB$ will not be shown in the graph of Fig. 3.14(b).

(ii) The voltage source $V$ is replaced by a short circuit, hence the line $FG$ will become a point in the graph.

(iii) All other lines containing linear elements $R$, $L$, $C$ will be shown by lines in the graph.

(iv) The graph of Fig. 3.14(b) has branches $b = 4$, nodes, $n = 3$. Therefore tree branches will be $n - 1 = 2$ and link, $s = b - n + 1 = 2$.

Thus far we have discussed the KVL (KCL) equation of the network having only voltage (current) source as the input. In the following section, we are going to discuss the generalized KVL and KCL equation having both voltage and current source as input.

The two Kirchhoff's laws are independent of the specific nature of the branches. There is a considerable amount of flexibility in selecting the make up of network branches, such as

(i) Each element itself (resistor, capacitor, etc.) constitutes a branch. This would require counting a node as the junction between elements that are connected in series. The series connection of $R_1$ and $L_1$ in Fig. 3.15(a) can be considered as two branches.

(ii) It is convenient to consider series-connected elements $R_1$ and $L_1$ as a single branch in Fig. 3.15(a).

Similar flexibility exists in case of sources present in the circuit. Let a voltage source be said to be accompanied if there is a passive branch in series with it, and a current source is said to be accompanied if there is a passive branch parallel with it. In Fig. 3.15(a), neither sources is accompanied. General statements about the number of unknowns, in terms of the number of branches, cannot be made if unaccompanied sources are treated as branches. Hence, we are going for some equivalence, as in Fig. 3.15(b), which is obtained by voltage shift (or $v$-shift) and current shift (or $i$-shift). As a result, it is always possible to make all sources as accompanied sources. It is convenient to treat all independent source as accompanied for the development of loop and node equations.

Copyrighted material

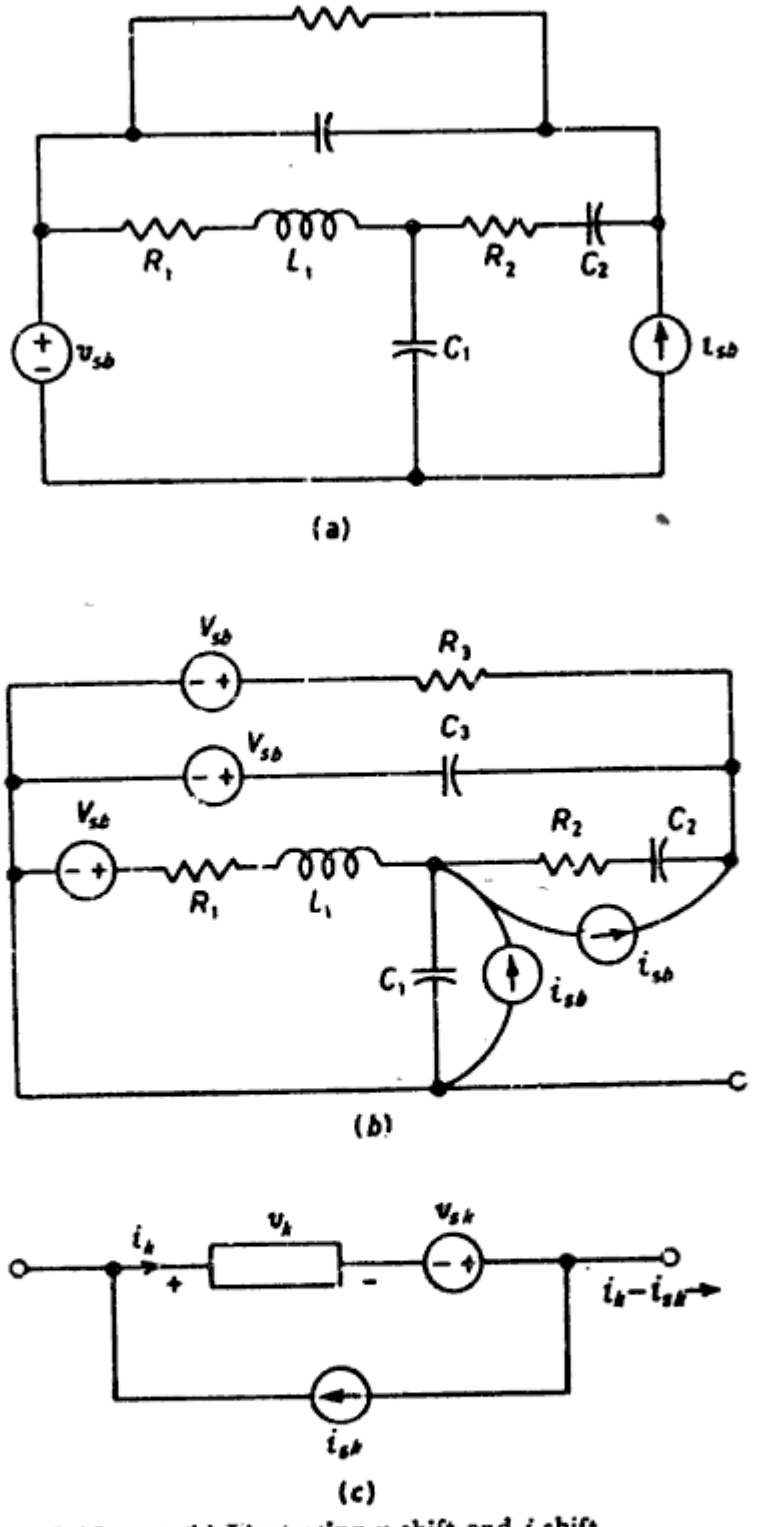


Fig. 3.15. (a)-(b) Illustrating $v$-shift and $i$-shift
(c) a general branch

The most general branch is to have the form shown in Fig. 3.15(c) containing both a voltage source in series with a passive branch and a current source in parallel with this combination. (For example, in Fig. 3.15(b) the left-hand current source $i_{sk}$ can be considered to be in parallel with the series connection of $v_{sk}$, $R_1$ and $L_1$.) Thus, the current of this $k$-th branch that is to be used in KCL will be $i_k - i_{sk}$. Similarly, the voltage that is to be used in KVL will be $v_k - v_{sk}$. Hence

Copyrighted material

the modified KCL equation in matrix form of Eq. (26) will be

$$A\, I_b = A\, I_s \tag{36}$$

$$Q\, I_b = Q\, I_s \tag{37}$$

and the modified KVL equation of Eq. (4) will be

$$B\, V_b = B\, V_s \tag{38}$$

where $I_s$ and $V_s$ are column matrices of source currents and source voltages.

The transformation from branch variable to loop currents as in Eq. (2) or node voltages as in Eq. (1) must be replaced by the following:

$$I_b - I_s = B^T\, I_L \tag{39}$$

$$V_b - V_s = Q^T\, V_t \tag{40}$$

$$V_b - V_s = A^T\, V_n \tag{41}$$

Since sources can be handled in this way, independent of the passive parts of a branch, we shall concentrate on the passive components. The sources will be made to vanish, which is done by replacing the voltage sources by short circuits and the current sources by open circuits.

Now, the branch relationships for the network, in matrix form can be written as follows :

$$V_b = Z_b\, I_b \tag{42}$$

$$I_b = Y_b\, V_b \tag{43}$$

**Mesh Equations:**

Using Eq. (42) in Eq. (38), we get

$$B(Z_b\, I_b) = B\, V_s \tag{44}$$

Using Eq. (39) in Eq. (44),

$$B\, Z_b (B^T I_L + I_s) = B\, V_s$$

or,

$$(B\, Z_b\, B^T)\, I_L = B(V_s - Z_b\, I_s)$$

or,

$$Z\, I_L = E \tag{45}$$

where

$$E = B(V_s - Z_b\, I_s) \tag{46}$$

and

$$Z = B\, Z_b\, B^T \tag{47}$$

Here $B$ is of order $(b - n + 1) \times b$ and $Z_b$ is called the branch impedance matrix of order $(b \times b)$ and $I_L$ is $(b - n + 1) \times 1$ column vector of loop currents, $V_s$ is $b \times 1$ column vector of source voltages, and $I_s$ is $b \times 1$ column vector of source currents. The coefficient matrix $Z$ is called the loop-impedance matrix of order $(b - n + 1) \times (b - n + 1)$. For a passive reciprocal network, $Z_b$ is a symmetric matrix. Hence, $Z$ is also symmetric. The matrix equation (45) represent a set $b - n + 1$ independent loop equations, for a network having $n$ vertices and $b$ branches.

Copyrighted material

The loop impedance matrix can be written explicitly in terms of the branch-parameter matrices as

$$Z = B Z_b B^T = sL + R + (1/s)(C^{-1}) \tag{48}$$

where

$$L = B L_b B^T \tag{49}$$

$$R = B R_b B^T \tag{50}$$

$$C^{-1} = B C_b^{-1} B^T \tag{51}$$

are the loop parameter matrices.

Once the loop equations have been obtained in the form

$$Z I_L = E \tag{52}$$

the solution is readily obtained as

$$I_L = Z^{-1} E \tag{53}$$

**Node Equations:**

In writing the loop equations, the branch $v$–$i$ relationships were inserted into the KVL equations, then a loop transformation was used to transform to loop current variables. In order to obtain the node euqation in matrix form for a given network, let us first apply KCL Eq. (36), which is repeated here

$$A I_b = A I_s \tag{54}$$

Inserting the branch relations (43), we get

$$A Y_b V_b = A I_s \tag{55}$$

Writing the branch voltages in terms of node voltages, through the node transformation in (41),

$$A Y_b (A^T V_n + V_s) = A I_s$$

$$(A Y_b A^T) V_n = A (I_s - Y_b V_s)$$

$$Y V_n = J \tag{56}$$

where

$$J = A (I_s - Y_b V_s) \tag{57}$$

$$Y = A Y_b A^T \tag{58}$$

Here $A$ is the reduced order incidence matrix of order $(n-1) \times b$ and $Y_b$ is called the branch-admittance matrix of order $b \times b$ and $V_n$ is $(n-1) \times 1$ column vector of node voltages with respect to the datum node, $I_s$ is $b \times 1$ column vector of source currents. The coefficient matrix $Y$ is called the node-admittance matrix of order $(n-1) \times (n-1)$. For a passive reciprocal network, $Y_b$ is a symmetric matrix. Hence, $Y$ is also symmetric. The matrix equation represents a set of independent $n-1$ equations, called the node equations, for a network having $n$ vertices and $b$ branches. $J$ is the equivalent node-current source vector whose entries are the algebraic sums of current sources (including the norton equivalents of voltage sources) incident at the corresponding nodes.

Copyrighted material

The node-admittance matrix can be written explicitly in terms of the branch-parameter matrices as

$$Y = A\,Y_b\,A^T = s\,C + G + (1/s)(L^{-1}) \tag{59}$$

where

$$C = A\,C_b\,A^T \tag{60}$$

$$G = A\,G_b\,A^T \tag{61}$$

$$L^{-1} = A\,(L_b^{-1})\,A^T \tag{62}$$

are the node parameter matrices.

Once the node equations are available in the form

$$Y\,V_n = J$$

The solution is readily obtained as

$$V_n = Y^{-1}\,J \tag{63}$$

The KCL equation can also be developed using $f$-cut-set matrix $Q$,

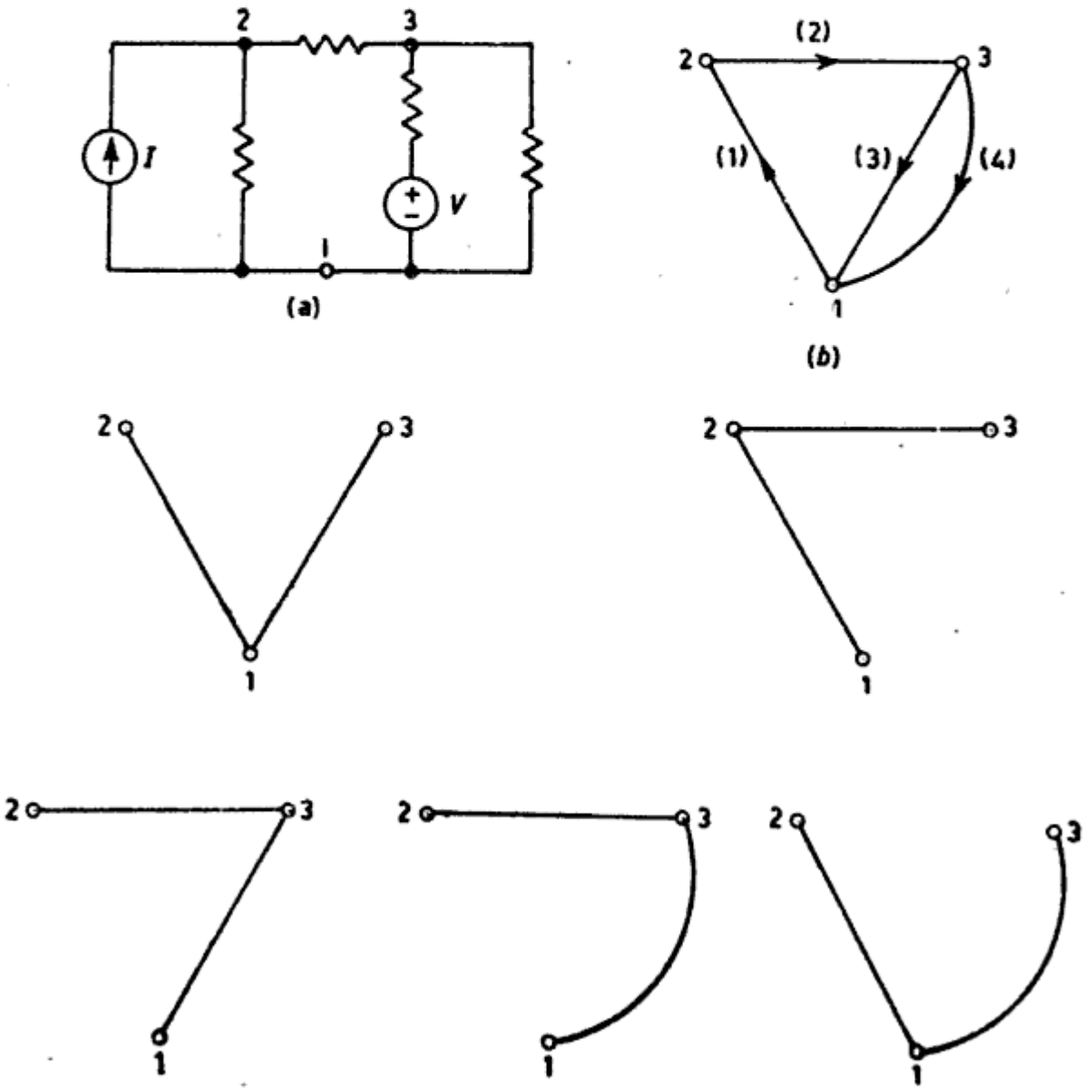


Fig. 3.16. (a) Network of Example 4. (b) directed graph (c) all possible trees

Copyrighted material

EXAMPLE 4. Draw the graph of the network shown in Fig. 3.16(a) and draw all possible trees of the network.

(i) Current source $I$ is replaced by an open-circuit
(ii) Voltage source $V$ is replaced by a short circuit
(iii) All other lines containing linear elements will be shown by the lines in the graph

(iv) The graph is shown in Fig. 3.16(b). It has branches, $b = 4$, nodes $n = 3$. Therefore, tree-branches will be $(n - 1) = 2$ and links, $(b - n + 1) = 2$. The complete incidence matrix $A_a$ can be written as:

$A_a =$

| Nodes ↓ | Branches→ | | | |
|---|---|---|---|---|
| | 1 | 2 | 3 | 4 |
| 1 | −1 | 0 | 1 | 1 |
| 2 | 1 | −1 | 0 | 0 |
| 3 | 0 | 1 | −1 | −1 |

The reduced matrix $A$ is

$$A = \begin{bmatrix} -1 & 0 & 1 & 1 \\ 1 & -1 & 0 & 0 \end{bmatrix}$$

$$[A]^T = \begin{bmatrix} -1 & 1 \\ 0 & -1 \\ 1 & 0 \\ 1 & 0 \end{bmatrix}$$

The number of possible trees

$$= \det\{[A][A^T]\} = \det\left\{\begin{bmatrix} -1 & 0 & 1 & 1 \\ 1 & -1 & 0 & 0 \end{bmatrix}\begin{bmatrix} -1 & 1 \\ 0 & -1 \\ 1 & 0 \\ 1 & 0 \end{bmatrix}\right\}$$

$$= \det\begin{bmatrix} 3 & -1 \\ -1 & 2 \end{bmatrix} = 5$$

Copyrighted material

The five possible trees are shown in Fig. 3.16(c).

EXAMPLE 5. Figure 3.17 shows five inductances which are interconnected to form three meshes. For the indicated directions of the branch currents, the numerical values of the coefficients of the self and mutual inductances are $L_{11} = 2$, $L_{22} = 2$, $L_{33} = 4$, $L_{44} = 2$, $L_{55} = 4$, $L_{12} = 2$, $L_{15} = -4$ and $L_{34} = 2$. All the remaining coefficients are zero. Establish the mesh equations.

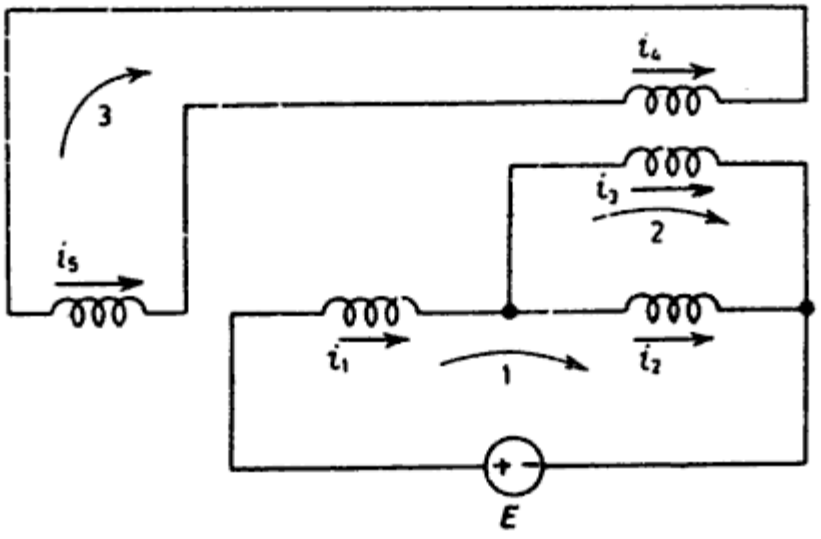


Fig. 3.17. Network of Example 5

For this network, the tie-set matrix $B$ is given by

$$B = \begin{bmatrix} 1 & 1 & 0 & 0 & 0 \\ 0 & -1 & 1 & 0 & 0 \\ 0 & 0 & 0 & -1 & -1 \end{bmatrix}$$

Hence, $Z$ is given, by $Z = BZ_bB^T$

$$= \begin{bmatrix} 1 & 1 & 0 & 0 & 0 \\ 0 & -1 & 1 & 0 & 0 \\ 0 & 0 & 0 & -1 & -1 \end{bmatrix} \begin{bmatrix} 2 & 2 & 0 & 0 & -4 \\ 2 & 2 & 0 & 0 & 0 \\ 0 & 0 & 4 & 2 & 0 \\ 0 & 0 & 2 & 2 & 0 \\ -4 & 0 & 0 & 0 & 4 \end{bmatrix} \begin{bmatrix} 1 & 0 & 0 \\ 1 & -1 & 0 \\ 0 & 1 & 0 \\ 0 & 0 & -1 \\ 0 & 0 & -1 \end{bmatrix}$$

Copyrighted material

$$= \begin{bmatrix} 1 & 1 & 0 & 0 & 0 \\ 0 & -1 & 1 & 0 & 0 \\ 0 & 0 & 0 & -1 & -1 \end{bmatrix} \begin{bmatrix} 4 & -2 & 4 \\ 4 & -2 & 0 \\ 0 & 4 & -2 \\ -4 & 0 & -4 \end{bmatrix}$$

$$= \begin{bmatrix} 8 & -4 & 4 \\ -4 & 6 & -2 \\ 4 & -2 & 6 \end{bmatrix}$$

Note that $z_{hk} = z_{kh}$, i.e. $[Z]$ is symmetric.
i.e. The mesh equations are therefore from Eq. (14), i.e.,

$$E = ZI_L$$

or,

$$\begin{bmatrix} E \\ 0 \\ 0 \end{bmatrix} = \begin{bmatrix} 8 & -4 & 4 \\ -4 & 6 & -2 \\ 4 & -2 & 6 \end{bmatrix} \begin{bmatrix} I_1 \\ I_2 \\ I_3 \end{bmatrix}$$

**Example 6.** Draw the oriented graph for the circuit shown in Fig. 3.18(a). Select loop current variables and write the network equilibrium equation in matrix form, using KVL.

The oriented graph is shown in Fig. 3.18(b). One of the possible tree is shown (with continuous line) in Fig. 3.18(c). The set of twigs is {1, 3, 4, 5, 6} and the set of links is {2, 7, 8, 9}.

Tie-set matrix $B$ is

| Loop current | | Branches | | | | | | | | |
|---|---|---|---|---|---|---|---|---|---|---|
| | | 1 | 2 | 3 | 4 | 5 | 6 | 7 | 8 | 9 |
| 2 | | 1 | 1 | 1 | 0 | 0 | 0 | 0 | 0 | 0 |
| 7 | $B =$ | −1 | 0 | 0 | −1 | 0 | 1 | 1 | 0 | 0 |
| 8 | | 1 | 0 | 1 | 1 | −1 | 0 | 0 | 1 | 0 |
| 9 | | 0 | 0 | −1 | 0 | 1 | −1 | 0 | 0 | 1 |

Copyrighted material

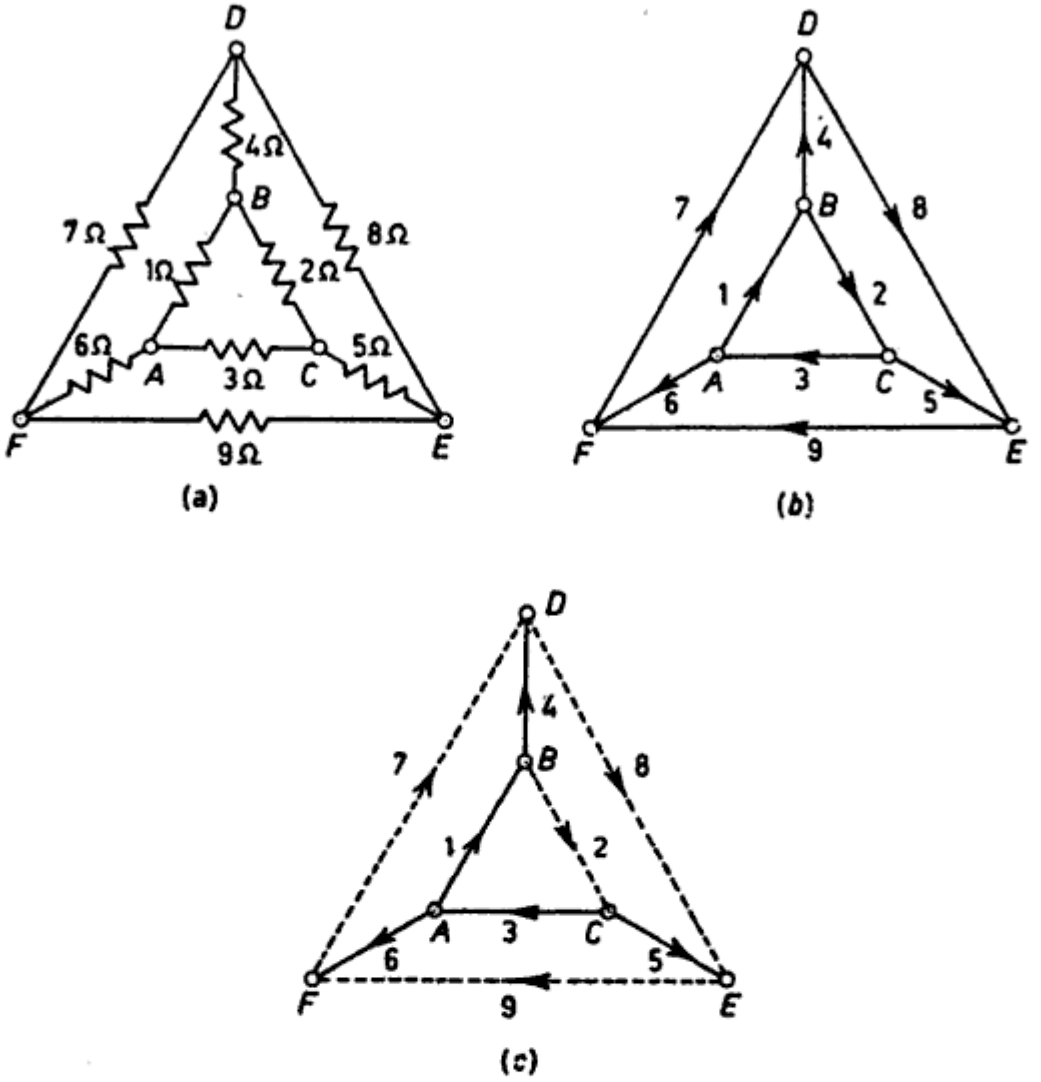


Fig. 3.18. (a) Network of Example 6
(b) its graph
(c) a tree (continuous line) and the set of links (dotted)

Then,

$$B^T = \begin{bmatrix} 1 & -1 & 1 & 0 \\ 1 & 0 & 0 & 0 \\ 1 & 0 & 1 & -1 \\ 0 & -1 & 1 & 0 \\ 0 & 0 & -1 & 1 \\ 0 & 1 & 0 & -1 \\ 0 & 1 & 0 & 0 \\ 0 & 0 & 1 & 0 \\ 0 & 0 & 0 & 1 \end{bmatrix}$$

Copyrighted material

Now,
$$[B][V_b] = [0]$$

or,
$$\begin{bmatrix} 1 & 1 & 1 & 0 & 0 & 0 & 0 & 0 & 0 \\ -1 & 0 & 0 & -1 & 0 & 1 & 1 & 0 & 0 \\ 1 & 0 & 1 & 1 & -1 & 0 & 0 & 1 & 0 \\ 0 & 0 & -1 & 0 & 1 & -1 & 0 & 0 & 1 \end{bmatrix} \begin{bmatrix} v_1 \\ v_2 \\ v_3 \\ v_4 \\ v_5 \\ v_6 \\ v_7 \\ v_8 \\ v_9 \end{bmatrix} = \begin{bmatrix} 0 \\ 0 \\ 0 \\ 0 \end{bmatrix}$$

Again, from Eq. (2)
$$[I_b] = [B^T][I_L]$$

or,
$$\begin{bmatrix} i_1 \\ i_2 \\ i_3 \\ i_4 \\ i_5 \\ i_6 \\ i_7 \\ i_8 \\ i_9 \end{bmatrix} = \begin{bmatrix} 1 & -1 & 1 & 0 \\ 1 & 0 & 0 & 0 \\ 1 & 0 & 1 & -1 \\ 0 & -1 & 1 & 0 \\ 0 & 0 & -1 & 1 \\ 0 & 1 & 0 & -1 \\ 0 & 1 & 0 & 0 \\ 0 & 0 & 1 & 0 \\ 0 & 0 & 0 & 1 \end{bmatrix} \begin{bmatrix} I_2 \\ I_7 \\ I_8 \\ I_9 \end{bmatrix}$$

Now, from Eq. (9), we get
$$[V_b] = [Z_b][I_b] - [V_s]$$

where, $V_b$ is the branch voltage vector of order $(9 \times 1)$

$Z_b$ is the impedance matrix of order $(9 \times 9)$

$I_b$ is the branch current vector of order $(9 \times 1)$

$V_s$ is the branch input voltage source vector of order $(9 \times 1)$

Here,
$$[V_s] = [0]$$

Copyrighted material

Then, we can write,

$$\begin{bmatrix} v_1 \\ v_2 \\ v_3 \\ v_4 \\ v_5 \\ v_6 \\ v_7 \\ v_8 \\ v_9 \end{bmatrix} = \begin{bmatrix} 1 & & & & & & & & 0 \\ & 2 & & & & & & & \\ & & 3 & & & & & & \\ & & & 4 & & & & & \\ & & & & 5 & & & & \\ & & & & & 6 & & & \\ & & & & & & 7 & & \\ & & & & & & & 8 & \\ 0 & & & & & & & & 9 \end{bmatrix} \begin{bmatrix} i_1 \\ i_2 \\ i_3 \\ i_4 \\ i_5 \\ i_6 \\ i_7 \\ i_8 \\ i_9 \end{bmatrix}$$

Now, using Eq. (42),

$$[V_b] = [Z_b][I_b] = [Z_b][B^T][I_L]$$

and

$$[B][V_b] = [B][Z_b][B^T][I_L] = [0]$$

Therefore,

$$[B][Z_b][B^T][I_L] = [0]$$

$$[Z][I_L] = [0]$$

where

$$[Z] = [B][Z_b][B^T]$$

$$Z = \begin{bmatrix} 1 & 1 & 1 & 0 & 0 & 0 & 0 & 0 & 0 \\ -1 & 0 & 0 & -1 & 0 & 1 & 1 & 0 & 0 \\ 1 & 0 & 1 & 1 & -1 & 0 & 0 & 1 & 0 \\ 0 & 0 & -1 & 0 & 1 & -1 & 0 & 0 & 1 \end{bmatrix}$$

$$\begin{bmatrix} 1 & & & & & & & & 0 \\ & 2 & & & & & & & \\ & & 3 & & & & & & \\ & & & 4 & & & & & \\ & & & & 5 & & & & \\ & & & & & 6 & & & \\ & & & & & & 7 & & \\ & & & & & & & 8 & \\ 0 & & & & & & & & 9 \end{bmatrix} \begin{bmatrix} 1 & -1 & 0 & 0 \\ 1 & 0 & 0 & 0 \\ 1 & 0 & 1 & -1 \\ 0 & -1 & 0 & 0 \\ 0 & 0 & -1 & 1 \\ 0 & 1 & 1 & -1 \\ 0 & 1 & 0 & 0 \\ 0 & 0 & 0 & 0 \\ 0 & 0 & 1 & 1 \end{bmatrix}$$

Copyrighted material

$$= \begin{bmatrix} 6 & -1 & 4 & -3 \\ -1 & 18 & -5 & -6 \\ 4 & -5 & 5 & -8 \\ -3 & -6 & -8 & 23 \end{bmatrix}$$

Kirchhoff's voltage law equations can now be written as

$$[Z][I_L] = \begin{bmatrix} 6 & -1 & 4 & -3 \\ -1 & 18 & -5 & -6 \\ 4 & -5 & 5 & -8 \\ -3 & -6 & -8 & 23 \end{bmatrix} \begin{bmatrix} I_2 \\ I_7 \\ I_8 \\ I_9 \end{bmatrix} = [0]$$

Therefore, on simplification, KVL equations can be written as:

$$\begin{aligned} 6I_2 - I_7 + 4I_8 - 3I_9 &= 0 \\ -I_2 + 18I_7 - 5I_8 - 6I_9 &= 0 \\ 4I_2 - 5I_7 + 5I_8 - 8I_9 &= 0 \\ -3I_2 - 6I_7 - 8I_8 + 23I_9 &= 0 \end{aligned}$$

EXAMPLE 7. For the network shown in Fig. 3.19(a), write down the tie-set

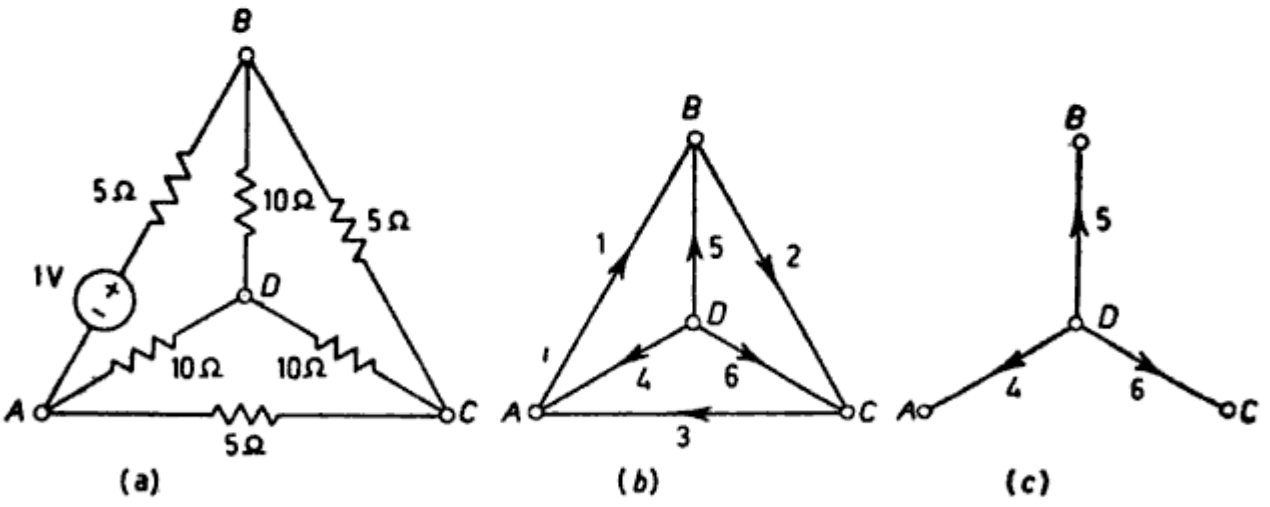


Fig. 3.19. (a) Network of Example 7
(b) oriented graph
(c) a tree

matrix and obtain the network equilibrium equation in matrix form using KVL. Calculate the loop currents. Then calculate branch voltages.

The oriented graph and one of the possible trees are shown in Fig. 3.19 (b) and (c), respectively. The tree is formed with the set of twigs {4, 5, 6} and the links are {1, 2, 3}.

Copyrighted material

No. of branches = 6
No. of nodes = 4
No. of links = 3

The tie-set matrix can be written as:

| Loop current | Branches | | | | | |
|---|---|---|---|---|---|---|
| | 1 | 2 | 3 | 4 | 5 | 6 |
| $I_1$ | 1 | 0 | 0 | 1 | −1 | 0 |
| $I_2$ | 0 | 1 | 0 | 0 | 1 | −1 |
| $I_3$ | 0 | 0 | 1 | −1 | 0 | 1 |

Now, the equilibrium equation in matrix form from loop current basis, using KVL, is given by

$$[B][Z_b][B^T][I_L] = [B][V_s] - [B][Z_b][I_s]$$

where, $V_s$ = branch input voltage source vector

$I_s$ = branch input current source vector

$$\text{Here, } B = \begin{bmatrix} 1 & 0 & 0 & 1 & -1 & 0 \\ 0 & 1 & 0 & 0 & 1 & -1 \\ 0 & 0 & 1 & -1 & 0 & 1 \end{bmatrix}, \quad B^T = \begin{bmatrix} 1 & 0 & 0 \\ 0 & 1 & 0 \\ 0 & 0 & 1 \\ 1 & 0 & -1 \\ -1 & 1 & 0 \\ 0 & -1 & 1 \end{bmatrix}$$

$$Z_b = \begin{bmatrix} 5 & & & & & \\ & 5 & & & & 0 \\ & & 5 & & & \\ & & & 10 & & \\ 0 & & & & 10 & \\ & & & & & 10 \end{bmatrix}$$

Copyrighted material

$$I_L = \begin{bmatrix} I_1 \\ I_2 \\ I_3 \end{bmatrix},$$

$$V_s = \begin{bmatrix} 1 \\ 0 \\ 0 \\ 0 \\ 0 \\ 0 \end{bmatrix},$$

$$I_s = \begin{bmatrix} 0 \\ 0 \\ 0 \\ 0 \\ 0 \\ 0 \end{bmatrix}$$

Therefore, $$[B][Z_b][B^T][I_L] = [B][V_s]$$

or, $$\begin{bmatrix} 25 & -10 & -10 \\ -10 & 25 & -10 \\ -10 & -10 & 25 \end{bmatrix} \begin{bmatrix} I_1 \\ I_2 \\ I_3 \end{bmatrix} = \begin{bmatrix} 1 \\ 0 \\ 0 \end{bmatrix}$$

Hence,

$$I_1 = \frac{\Delta_1}{\Delta} = 3/35 \text{ A},$$

$$I_2 = \frac{\Delta_2}{\Delta} = 2/85 \text{ A},$$

$$I_3 = \frac{\Delta_3}{\Delta} = 2/35 \text{ A}$$

The branch currents are

$$[I_b] = [B^T][I_L]$$

The branch voltages are

$$[V_b] = [Z_b][I_b] - [V_s]$$

$$[V_b] = [Z_b][B^T][I_L] - [V_s]$$

Copyrighted material

$$\text{i.e.}\quad \begin{bmatrix} v_1 \\ v_2 \\ v_3 \\ v_4 \\ v_5 \\ v_6 \end{bmatrix} = \begin{bmatrix} 5 & & & & & 0 \\ & 5 & & & & \\ & & 5 & & & \\ & & & 10 & & \\ & & & & 10 & \\ 0 & & & & & 10 \end{bmatrix} \begin{bmatrix} 1 & 0 & 0 \\ 0 & 1 & 0 \\ 0 & 0 & 1 \\ 1 & 0 & -1 \\ -1 & 1 & 0 \\ 0 & -1 & 1 \end{bmatrix} \begin{bmatrix} 3/35 \\ \\ \\ 2/35 \\ \\ 2/35 \end{bmatrix} - \begin{bmatrix} 1 \\ 0 \\ 0 \\ 0 \\ 0 \\ 0 \end{bmatrix}$$

After calculation,

$$v_1 = -4/7,\ v_2 = 2/7,\ v_3 = 2/7,\ v_4 = 2/7,\ v_5 = -2/7,\ v_6 = 0$$

(all in volts)

EXAMPLE 8. Draw the oriented graph for the circuit shown in Fig. 3.20 (a). Write the network equilibrium equations.

The branch currents are so chosen that they assume the direction out of the dotted terminals. Because of this choice of current direction, the mutual inductance is positive. The branches being numbered, the oriented graph is shown in Fig. 3.20 (b). The voltage source is short circuited. The tree is shown

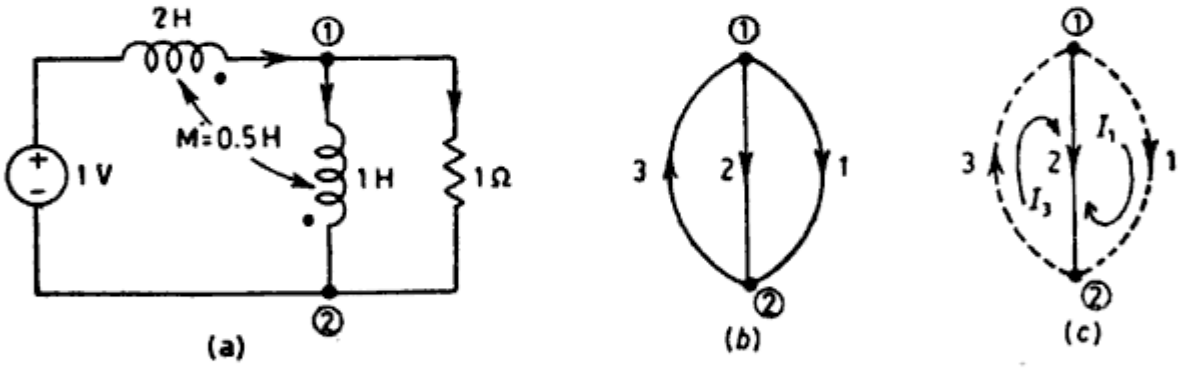


Fig. 3.20. (a) Network of Example 8
(b) directed graph
(c) a possible tree and the set of links of the corresponding cotree

in Fig. 3.20(c). The links are {1, 3}. The tie-set matrix $B$ can be written as

| Loops | Branches 1 | 2 | 3 |
|---|---|---|---|
| 1 | 1 | −1 | 0 |
| 3 | 0 | 1 | 1 |

Copyrighted material

$$[B] = \begin{bmatrix} 1 & -1 & 0 \\ 0 & 1 & 1 \end{bmatrix}, \quad [B^T] = \begin{bmatrix} 1 & 0 \\ -1 & 1 \\ 0 & 1 \end{bmatrix}$$

The branch impedance matrix,

$$[Z_b] = \begin{bmatrix} 1 & 0 & 0 \\ 0 & s & 0.5s \\ 0 & 0.5s & 2s \end{bmatrix}$$

$$[Z] = [B][Z_b][B^T] = \begin{bmatrix} 1+s & -1.5s \\ -1.5s & 4s \end{bmatrix}$$

The network equilibrium equation on loop basis is

$$[Z][I_L] = [B]\{[V_s] - [Z_b][I_s]\} = [B][V_s]$$

as $[I_s] = [0]$

Therefore, $\begin{bmatrix} 1+s & -1.5s \\ -1.5s & 4s \end{bmatrix} \begin{bmatrix} I_1 \\ I_3 \end{bmatrix} = \begin{bmatrix} 1 & -1 & 0 \\ 0 & 1 & 1 \end{bmatrix} \begin{bmatrix} 0 \\ 0 \\ 1 \end{bmatrix} = \begin{bmatrix} 0 \\ 1 \end{bmatrix}$

Hence, the network equilibrium equations are

$$(1+s)\,I_1 - 1.5s\,I_3 = 0$$
$$-1.5s\,I_1 + 4s\,I_3 = 1$$

EXAMPLE 9. The original circuit is given in Fig. 3.21 (a). Let us consider the trees of the graph of Fig. 3.21(b) is as shown in Fig. 3.21(c). The tree branches are {1, 3, 4, 5, 6}. The *f*-cut-set matrix can be written as

| *f*-cut-sets | Branches | | | | | | | | |
|---|---|---|---|---|---|---|---|---|---|
| | 1 | 2 | 3 | 4 | 5 | 6 | 7 | 8 | 9 |
| 1 | 1 | −1 | 0 | 0 | 0 | 0 | 1 | −1 | 0 |
| 3 | 0 | −1 | 1 | 0 | 0 | 0 | 0 | −1 | 1 |
| 4 | 0 | 0 | 0 | 1 | 0 | 0 | 1 | −1 | 0 |
| 5 | 0 | 0 | 0 | 0 | 1 | 0 | 0 | 1 | −1 |
| 6 | 0 | 0 | 0 | 0 | 0 | 1 | −1 | 0 | 1 |

Copyrighted material

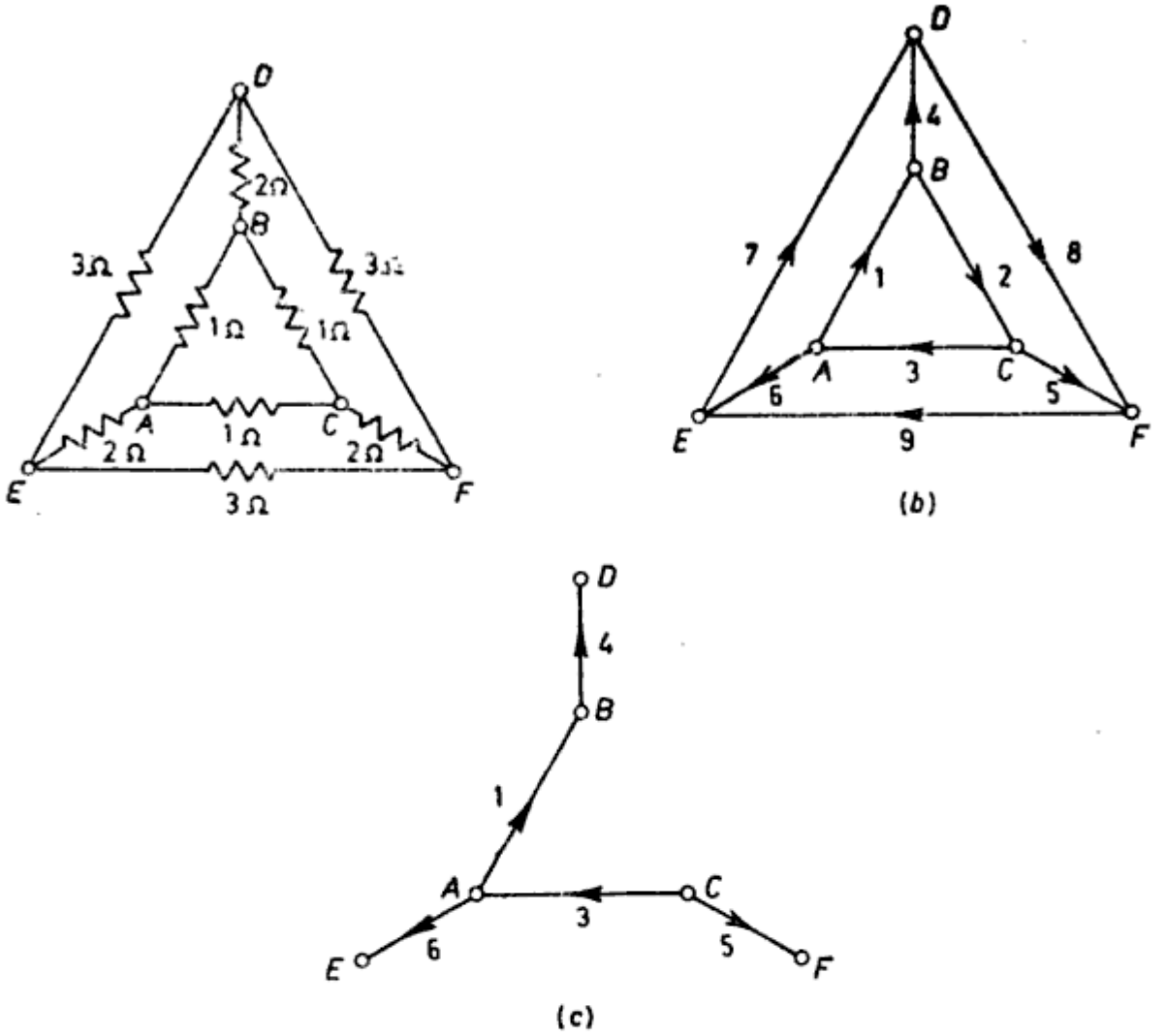


Fig. 3.21. (a) Network of Example 9 (b) oriented graph (c) a possible tree

Kirchhoff's current law equations can be written as

$$[Q][I_b] = [0]$$

$$\begin{bmatrix} 1 & -1 & 0 & 0 & 0 & 0 & 1 & -1 & 0 \\ 0 & -1 & 1 & 0 & 0 & 0 & 0 & -1 & 1 \\ 0 & 0 & 0 & 1 & 0 & 0 & 1 & -1 & 0 \\ 0 & 0 & 0 & 0 & 1 & 0 & 0 & 1 & -1 \\ 0 & 0 & 0 & 0 & 0 & 1 & -1 & 0 & 1 \end{bmatrix} \begin{bmatrix} i_1 \\ i_2 \\ i_3 \\ i_4 \\ i_5 \\ i_6 \\ i_7 \\ i_8 \\ i_9 \end{bmatrix} = \begin{bmatrix} 0 \\ 0 \\ 0 \\ 0 \end{bmatrix}$$

Copyrighted material

The columns of the cut-set matrix will give the branch voltages in terms of tree-branches voltages ($V_t$)

$$[V_b] = [Q^T][V_t] + [V_s] = Q^T[V_t]$$

where, $V_s$ = branch input voltage source vector, which is [0] in this case. Therefore,

$$\begin{bmatrix} V_1 \\ V_2 \\ V_3 \\ V_4 \\ V_5 \\ V_6 \\ V_7 \\ V_8 \\ V_9 \end{bmatrix} = \begin{bmatrix} 1 & 0 & 0 & 0 & 0 \\ -1 & -1 & 0 & 0 & 0 \\ 0 & 1 & 0 & 0 & 0 \\ 0 & 0 & 1 & 0 & 0 \\ 0 & 0 & 0 & 1 & 0 \\ 0 & 0 & 0 & 0 & 1 \\ 1 & 0 & 1 & 0 & -1 \\ -1 & -1 & -1 & 1 & 0 \\ 0 & 1 & 0 & -1 & 1 \end{bmatrix} \begin{bmatrix} V_{t1} \\ V_{t3} \\ V_{t4} \\ V_{t5} \\ V_{t6} \end{bmatrix}$$

Equation (29) is rewritten as

$$[I_b] = [Y_b][V_b] - [I_s]$$

Here, as no current source is present,

$$[I_s] = [0]$$

$[I_s]$ is branch input current-source vector.

Now,

$$[Y_b] = [Z_b]^{-1} = \begin{bmatrix} 1 & & & & & & & & \\ & 1 & & & & & & 0 & \\ & & 1 & & & & & & \\ & & & \frac{1}{2} & & & & & \\ & & & & \frac{1}{2} & & & & \\ & & & & & \frac{1}{2} & & & \\ & & & & & & \frac{1}{3} & & \\ & 0 & & & & & & \frac{1}{3} & \\ & & & & & & & & \frac{1}{3} \end{bmatrix}$$

Hence,

$$[I_b] = [Y_b][V_b]$$

where $Y_b$ is the branch admittance matrix.

Copyrighted material

We get,

$$\begin{bmatrix} i_1 \\ i_2 \\ i_3 \\ i_4 \\ i_5 \\ i_6 \\ i_7 \\ i_8 \\ i_9 \end{bmatrix} = \begin{bmatrix} 1 & & & & & & & & 0 \\ & 1 & & & & & & & \\ & & 1 & & & & & & \\ & & & 1/2 & & & & & \\ & & & & 1/2 & & & & \\ & & & & & 1/2 & & & \\ & & & & & & 1/3 & & \\ & & & & & & & 1/3 & \\ 0 & & & & & & & & 1/3 \end{bmatrix} \begin{bmatrix} v_1 \\ v_2 \\ v_3 \\ v_4 \\ v_5 \\ v_6 \\ v_7 \\ v_8 \\ v_9 \end{bmatrix}$$

Using Eq. (40) in Eq. 29, we get

$$[I_b] = [Y_b][Q^T][V_t] + [Y_b][V_s] - [I_s]$$

Again, from Eq. (27),

$$[Q][I_b] = [0] = [Q][Y_b][Q^T][V_t] + [Q]\{[Y_b][V_s] - [I_s]\}$$

Therefore, $$[Q][Y_b][Q^T][V_t] = [Q]\{I_s] - [Y_b][V_s]\}$$

Therefore, Kirchhoff's current law can be written as

$$[Y][V] = [J]$$

where $$[Y] = [Q][Y_b][Q^T]$$

and $$[Q]\{[I_s] - [Y_b][V_s]\} = [J]$$

Hence, $$[Q][Y_b][Q^T][V_t] = [0] \tag{64}$$

as, here $$[V_s] = [0], \quad [I_s] = [0]$$

Therefore, Eq. (64) becomes

$$\begin{bmatrix} 1 & -1 & 0 & 0 & 0 & 0 & 1 & -1 & 0 \\ 0 & -1 & 1 & 0 & 0 & 0 & 0 & -1 & 1 \\ 0 & 0 & 0 & 1 & 0 & 0 & 1 & -1 & 0 \\ 0 & 0 & 0 & 0 & 1 & 0 & 0 & 1 & -1 \\ 0 & 0 & 0 & 0 & 0 & 1 & -1 & 0 & 1 \end{bmatrix} \begin{bmatrix} 1 & & & & & & & & \\ & 1 & & & & & & & 0 \\ & & 1 & & & & & & \\ & & & \frac{1}{2} & & & & & \\ & & & & \frac{1}{2} & & & & \\ & & & & & \frac{1}{2} & & & \\ & & & & & & \frac{1}{3} & & \\ & & & & & & & \frac{1}{3} & \\ 0 & & & & & & & & \frac{1}{3} \end{bmatrix}$$

Copyrighted material

$$\begin{bmatrix} 1 & 0 & 0 & 0 & 0 \\ -1 & -1 & 0 & 0 & 0 \\ 0 & 1 & 0 & 0 & 0 \\ 0 & 0 & 1 & 0 & 0 \\ 0 & 0 & 0 & 1 & 0 \\ 0 & 0 & 0 & 0 & 1 \\ 1 & 0 & 1 & 0 & -1 \\ -1 & -1 & -1 & 1 & 0 \\ 0 & 1 & 0 & -1 & 1 \end{bmatrix} \begin{bmatrix} V_{t1} \\ V_{t2} \\ V_{t4} \\ V_{t5} \\ V_{t6} \end{bmatrix} = [0]$$

or,

$$\begin{bmatrix} 2 & 2/3 & 0 & -1/3 & 1/3 \\ -4/3 & 0 & -1/3 & 0 & 1/3 \\ 2/3 & 1/3 & 5/6 & 1/3 & 1/3 \\ 1/3 & 0 & 1/3 & 1/2 & -1/3 \\ -1/3 & 1/3 & -1/3 & 1/3 & 1/2 \end{bmatrix} \begin{bmatrix} V_{t1} \\ V_{t2} \\ V_{t4} \\ V_{t5} \\ V_{t6} \end{bmatrix} = \begin{bmatrix} 0 \\ 0 \\ 0 \\ 0 \\ 0 \end{bmatrix}$$

Simplifying,

$$2V_{t1} + (2/3)V_{t2} - (1/3)V_{t5} + (1/3)V_{t6} = 0$$

$$-(4/3)V_{t1} - (1/3)V_{t4} + (1/3)V_{t6} = 0$$

$$(2/3)V_{t1} + (1/3)V_{t2} + (5/6)V_{t4} + (1/3)V_{t5} + (1/3)V_{t6} = 0$$

$$(1/3)V_{t1} + (1/3)V_{t4} + (1/2)V_{t5} - (1/3)V_{t6} = 0$$

$$-(1/3)V_{t1} + (1/3)V_{t2} - (1/3)V_{t4} + (1/3)V_{t5} + (1/2)V_{t6} = 0$$

The equilibrium equation in matrix form, on node-basis, may be rewritten as

$$[Q][Y_b][Q^T][V_t] = [Q]\{[I_s] - [Y_b][V_s]\} \tag{65}$$

where $Q$ is the $f$-cut-set matrix

$Q^T$ is the transpose of $Q$
$V_b$ is the branch admittance matrix
$V_t$ is the independent tree-branch voltage column matrix
$I_s$ is the branch input current source, column matrix
$V_s$ is the branch input voltage source, column matrix.

EXAMPLE 10. For the network given in Fig. 3.22(a), write the $f$-cut-set matrix and hence, obtain the equilibrium equation on node-basis.

Copyrighted material

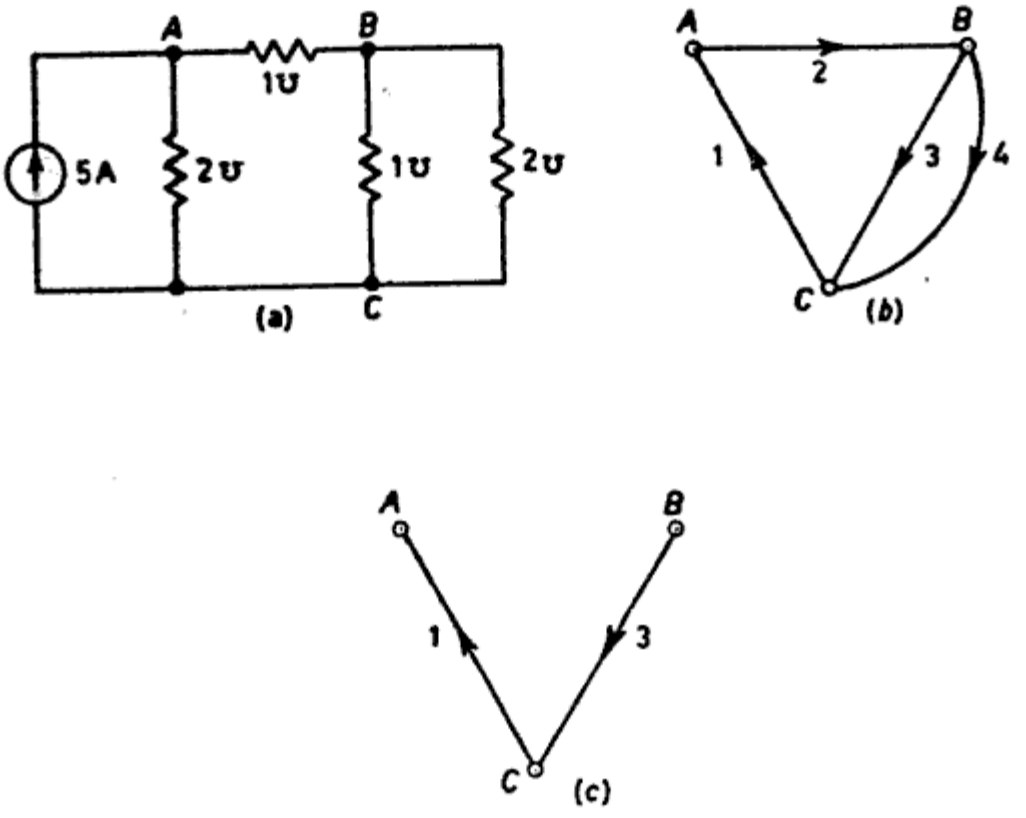


Fig. 3.22. (a) Network of Example 10
(b) oriented graph
(c) a possible tree

The graph of the network is shown in Fig. 3.22(b) where the current source is open circuited and hence is not present. Choose a tree as in Fig. 3.22(c).

$Q =$

| cut-set | Branches | | | |
|---|---|---|---|---|
| | 1 | 2 | 3 | 4 |
| 1 | 1 | −1 | 0 | 0 |
| 3 | 0 | −1 | 1 | 1 |

$$Q^T = \begin{bmatrix} 1 & 0 \\ -1 & -1 \\ 0 & 1 \\ 0 & 1 \end{bmatrix}, \quad Y_b = \begin{bmatrix} 2 & & & 0 \\ & 1 & & \\ & & 1 & \\ 0 & & & 2 \end{bmatrix}$$

Copyrighted material

$$I_s = \begin{bmatrix} -5 \\ 0 \\ 0 \\ 0 \end{bmatrix}$$

$$V_s = [0]$$

$$[Q][Y_b][Q^T][V_t] = [Q][I_s]$$

$$\begin{bmatrix} 1 & -1 & 0 & 0 \\ 0 & -1 & 1 & 1 \end{bmatrix} \begin{bmatrix} 2 & & & 0 \\ & 1 & & \\ & & 1 & \\ 0 & & & 2 \end{bmatrix} \begin{bmatrix} 1 & 0 \\ -1 & -1 \\ 0 & 1 \\ 0 & 1 \end{bmatrix} \begin{bmatrix} V_{t1} \\ V_{t3} \end{bmatrix}$$

$$= \begin{bmatrix} 1 & -1 & 0 & 0 \\ 0 & -1 & 1 & 1 \end{bmatrix} \begin{bmatrix} -5 \\ 0 \\ 0 \\ 0 \end{bmatrix} \begin{bmatrix} 3 & 1 \\ 1 & 4 \end{bmatrix} \begin{bmatrix} V_{t1} \\ V_{t3} \end{bmatrix}$$

$$= \begin{bmatrix} -5 \\ 0 \end{bmatrix}$$

Therefore,

$$V_{t1} = -20/11 \text{ V} \quad \text{or,} \quad V_{AC} = 20/11 \text{ V}$$

$$V_{t3} = 5/11 \text{ V} \quad \text{or,} \quad V_{BC} = 5/11 \text{ V}$$

EXAMPLE 11. For the network shown in Fig. 3.23(a), draw the oriented graph. Write the tie-set schedule and hence obtain the equilibrium equation on loop basis. Calculate the values of branch currents and branch voltages.

The graph is shown in Fig. 3.23(b), where current source is open circuited and voltage source is short circuited.

The tree-twigs are 4, 5, 6

The links are 1, 2, 3

Copyrighted material

The tie-set matrix can be written as

| Link current | Branches | | | | | |
|---|---|---|---|---|---|---|
| | 1 | 2 | 3 | 4 | 5 | 6 |
| 1 | 1 | 0 | 0 | −1 | 1 | −1 |
| 2 | 0 | 1 | 0 | −1 | 1 | 0 |
| 3 | 0 | 0 | 1 | 1 | 0 | 0 |

$$B = \begin{bmatrix} 1 & 0 & 0 & -1 & 1 & -1 \\ 0 & 1 & 0 & -1 & 1 & 0 \\ 0 & 0 & 1 & 1 & 0 & 0 \end{bmatrix}$$

$$B^T = \begin{bmatrix} 1 & 0 & 0 \\ 0 & 1 & 0 \\ 0 & 0 & 1 \\ -1 & -1 & 1 \\ 1 & 1 & 0 \\ -1 & 0 & 0 \end{bmatrix}$$

$$Z_b = \begin{bmatrix} 1 & & & & & 0 \\ & 1 & & & & \\ & & 1 & & & \\ & & & 0 & & \\ & & & & 1 & \\ 0 & & & & & 1 \end{bmatrix}$$

Copyrighted material

$$[B]\,[Z_b]\,[B^T] = \begin{bmatrix} 3 & 1 & 0 \\ 1 & 2 & 0 \\ 0 & 0 & 1 \end{bmatrix}$$

$$[V_s] - [Z_b][I_s] = \begin{bmatrix} 0 \\ 0 \\ 0 \\ 1 \\ 0 \\ 0 \end{bmatrix} - \begin{bmatrix} 1 & & & & & 0 \\ & 1 & & & & \\ & & 1 & & & \\ & & & 0 & & \\ & & & & 1 & \\ 0 & & & & & 1 \end{bmatrix} \begin{bmatrix} -1 \\ 0 \\ 0 \\ 0 \\ 0 \\ 0 \end{bmatrix} = \begin{bmatrix} 1 \\ 0 \\ 0 \\ 1 \\ 0 \\ 0 \end{bmatrix}$$

The equilibrium equation (45) on loop basis can be rewritten as

$$[B]\,[Z_b]\,[B^T]\,[I_L] = [B]\,\{[V_s] - [Z_b]\,[I_s]\}$$

$$\text{or,} \quad \begin{bmatrix} 3 & 1 & 0 \\ 1 & 2 & 0 \\ 0 & 0 & 1 \end{bmatrix} \begin{bmatrix} I_1 \\ I_2 \\ I_3 \end{bmatrix} = \begin{bmatrix} 1 & 0 & 0 & -1 & 1 & -1 \\ 0 & 1 & 0 & -1 & 1 & 0 \\ 0 & 0 & 1 & 1 & 0 & 0 \end{bmatrix} \begin{bmatrix} 1 \\ 0 \\ 0 \\ 1 \\ 0 \\ 0 \end{bmatrix} = \begin{bmatrix} 0 \\ -1 \\ 1 \end{bmatrix}$$

$$I_1 = \frac{\Delta_1}{\Delta} = \frac{1}{5}\text{A}, I_2 = \frac{\Delta_2}{\Delta} = -\frac{3}{5}\text{A}, I_3 = \frac{\Delta_3}{\Delta} = 1\text{A}$$

Now, the branch currents can be rewritten as

$$[I_b] = [B^T]\,[I_L] + [I_s]$$

$$\text{or,} \quad \begin{bmatrix} i_1 \\ i_2 \\ i_3 \\ i_4 \\ i_5 \\ i_6 \end{bmatrix} = \begin{bmatrix} 1 & 0 & 0 \\ 0 & 1 & 0 \\ 0 & 0 & 1 \\ -1 & -1 & 1 \\ 1 & 1 & 0 \\ -1 & 0 & 0 \end{bmatrix} \begin{bmatrix} 1/5 \\ -3/5 \\ 1 \end{bmatrix} + \begin{bmatrix} -1 \\ 0 \\ 0 \\ 0 \\ 0 \\ 0 \end{bmatrix} = \begin{bmatrix} -4/5 \\ -3/5 \\ 1 \\ 7/5 \\ -2/5 \\ -1/5 \end{bmatrix}.$$

Copyrighted material

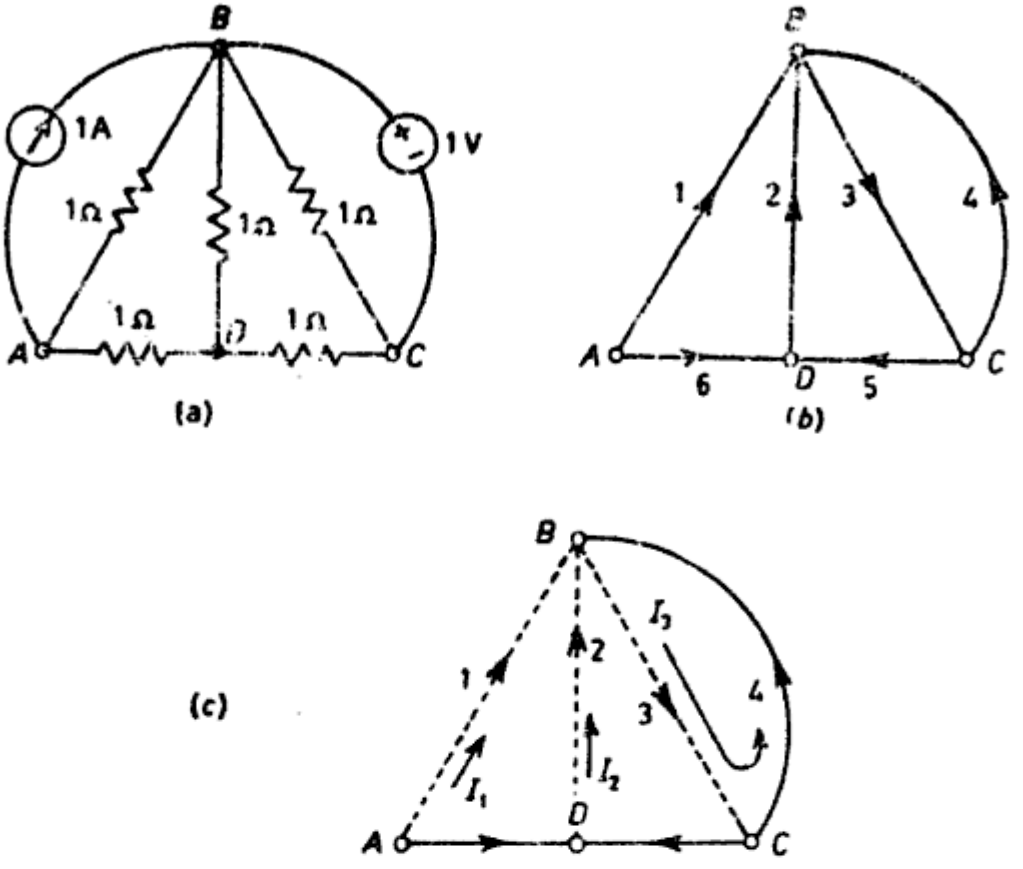


Fig. 3.23. (a) Network of Example 11
(b) directed graph
(c) a possible tree (continuous line) and the set of links (dotted line) of the corresponding cotree

The branch voltages from Eq. (9) can be rewritten as

$$[V_b] = [Z_b][I_b] - [V_s]$$

or,

$$\begin{bmatrix} v_1 \\ v_2 \\ v_3 \\ v_4 \\ v_5 \\ v_6 \end{bmatrix} = \begin{bmatrix} 1 & & & & & 0 \\ & 1 & & & & \\ & & 1 & & & \\ & & & 0 & & \\ & & & & 1 & \\ 0 & & & & & 1 \end{bmatrix} \begin{bmatrix} -4/5 \\ -3/5 \\ 1 \\ 7/5 \\ -2/5 \\ -1/5 \end{bmatrix} - \begin{bmatrix} 0 \\ 0 \\ 0 \\ 1 \\ 0 \\ 0 \end{bmatrix} = \begin{bmatrix} -4/5 \\ -3/5 \\ 1 \\ -1 \\ -2/5 \\ -1/5 \end{bmatrix}$$

As a check, KVL can be rewritten as

$$B V_b = 0$$

i.e. sum of voltages in any loop is zero.

Copyrighted material

$$\text{or,}\quad \begin{bmatrix} 1 & 0 & 0 & -1 & 1 & -1 \\ 0 & 1 & 0 & -1 & 1 & 0 \\ 0 & 0 & 1 & 1 & 0 & 0 \end{bmatrix} \begin{bmatrix} -4/5 \\ -3/5 \\ 1 \\ -1 \\ -2/5 \\ -1/5 \end{bmatrix} = \begin{bmatrix} 0 \\ \\ 0 \end{bmatrix}$$

The same problem can be solved by the usual mesh equation, using KVL as in Chapter 2. There, the current source has to be converted into voltage source before writting the mesh equation. Apart from this, for very large complex networks, it is a difficult and cumbersome procedure to solve the problem by the conventional method of mesh analysis and there will be chances of error. On the other hand, by the method of topology, source transformation is not required, and the method is systematic without any chance of error either on

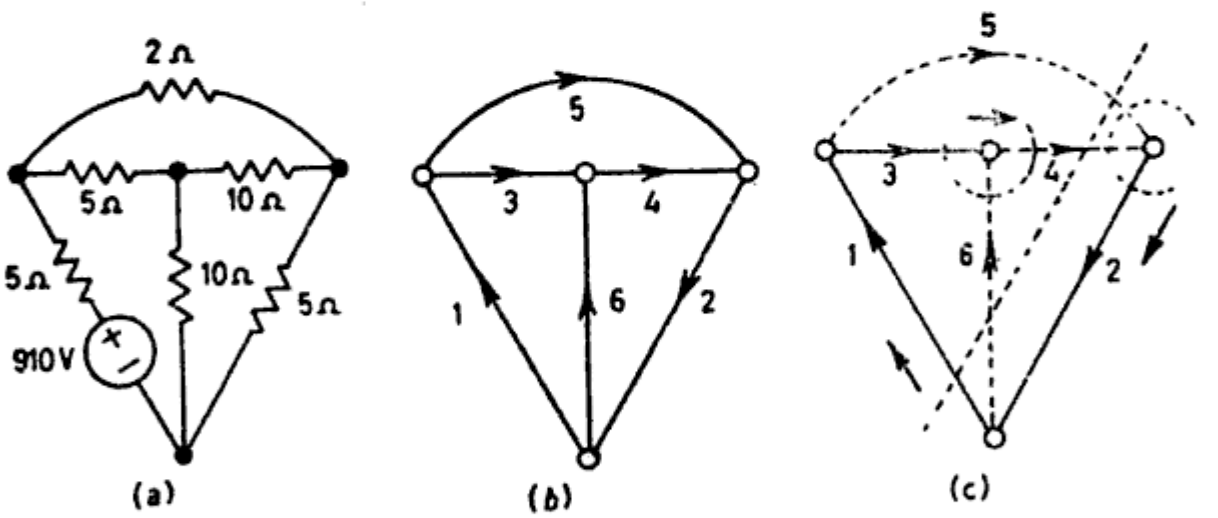


Fig. 3.24. (a) Network (b) graph (c) fundamental cut-set

the loop basis or on the node basis formulation of the network equilibrium equation. The method is supported by the checking procedure $B\,V_b = 0$ in the loop basis method, and $Q\,I_b = 0$ in the node basis method.

EXAMPLE 12. Calculate the branch voltage and branch currents, using the voltage variable (node basis) method of the network in Fig. 3.24(a).

The graph of the network is shown in Fig. 3.24(b). Note that the voltage source is to be shorted and replaced by its internal impedance.

Copyrighted material

The *f*-cut-set matrix for the selected tree of Fig 3.24(c) is

| Tree branch number i.e. *f*-cut-set | Branches | | | | | |
|---|---|---|---|---|---|---|
| | 1 | 2 | 3 | 4 | 5 | 6 |
| 1 | 1 | 0 | 0 | −1 | −1 | 1 |
| 2 | 0 | 1 | 0 | −1 | −1 | 0 |
| 3 | 0 | 0 | 1 | −1 | 0 | 1 |

$$Q = \begin{bmatrix} 1 & 0 & 0 & -1 & -1 & 1 \\ 0 & 1 & 0 & -1 & -1 & 0 \\ 0 & 0 & 1 & -1 & 0 & 1 \end{bmatrix}$$

$$Q^T = \begin{bmatrix} 1 & 0 & 0 \\ 0 & 1 & 0 \\ 0 & 0 & 1 \\ -1 & -1 & -1 \\ -1 & -1 & 0 \\ 1 & 0 & 1 \end{bmatrix}$$

$$Y_b = \begin{bmatrix} 0.2 & & & & & 0 \\ & 0.2 & & & & \\ & & 0.2 & & & \\ & & & 0.1 & & \\ & & & & 0.5 & \\ 0 & & & & & 0.1 \end{bmatrix}$$

Copyrighted material

$$V_s = \begin{bmatrix} 910 \\ 0 \\ 0 \\ 0 \\ 0 \\ 0 \end{bmatrix}$$

$$I_s = [0]$$

The network equilibrium equation (65) on node basis can be rewritten as

$$[Q]\,[Y_b]\,[Q^T]\,[V_t] = Q\{I_s - Y_b V_s\} = -Q\,Y_b\,V_s$$

as

$$I_s = 0$$

Substituting the values, we get

$$\begin{bmatrix} 0.9 & 0.6 & 0.2 \\ 0.6 & 0.8 & 0.1 \\ 0.2 & 0.1 & 0.3 \end{bmatrix} \begin{bmatrix} V_{t1} \\ V_{t2} \\ V_{t3} \end{bmatrix} = \begin{bmatrix} -182 \\ 0 \\ 0 \end{bmatrix}$$

Now, by Cramer's rule,

$$V_{t1} = \frac{\Delta_1}{\Delta} = -460\text{ V}$$

$$V_{t2} = \frac{\Delta_2}{\Delta} = 320\text{ V}$$

$$V_{t3} = \frac{\Delta_3}{\Delta} = 200\text{ V}$$

The branch voltages can be written as

$$V_b = Q^T V_t + V_s = \begin{bmatrix} 1 & 0 & 0 \\ 0 & 1 & 0 \\ 0 & 0 & 1 \\ -1 & -1 & -1 \\ -1 & -1 & 0 \\ 1 & 0 & 1 \end{bmatrix} \begin{bmatrix} -460 \\ 320 \\ 200 \end{bmatrix} + \begin{bmatrix} 910 \\ 0 \\ 0 \end{bmatrix}$$

Copyrighted material

or,
$$\begin{bmatrix} v_1 \\ v_2 \\ v_3 \\ v_4 \\ v_5 \\ v_6 \end{bmatrix} = \begin{bmatrix} 450 \\ 320 \\ 200 \\ -60 \\ 160 \\ -260 \end{bmatrix}$$

The branch currents from Eq. (29) can be written as

$$I_b = Y_b V_b - I_s$$

or,
$$\begin{bmatrix} i_1 \\ i_2 \\ i_3 \\ i_4 \\ i_5 \\ i_6 \end{bmatrix} = \begin{bmatrix} 0.2 & & & & & \\ & 0.2 & & & 0 & \\ & & 0.2 & & & \\ & & & 0.1 & & \\ & 0 & & & 0.5 & \\ & & & & & 0.1 \end{bmatrix} \begin{bmatrix} 450 \\ 320 \\ 200 \\ -60 \\ 140 \\ 260 \end{bmatrix} - \begin{bmatrix} 0 \\ 0 \\ 0 \\ 0 \\ 0 \\ 0 \end{bmatrix} = \begin{bmatrix} 90 \\ 64 \\ 20 \\ -6 \\ 70 \\ -26 \end{bmatrix}$$

EXAMPLE 13. Draw the graph of the network shown in Fig. 3.25(a). Formulate the $f$-cut-set matrix. Write the equilibrium equation in matrix form on node basis.

The graph is shown in Fig. 3.25(b) where voltage source is short circuited.

Number of branches, $b = 4$ Number of nodes, $n = 3$

Therefore, number of tree branches $= n - 1 = 2$

and number of links $= b - n + 1 = 2$

Branch currents are chosen to assume directions out of the dotted terminal, to make mutual inductance $M$ positive. If the current flows out of the dotted terminal in one inductor and into the dotted terminal in the other, the mutual

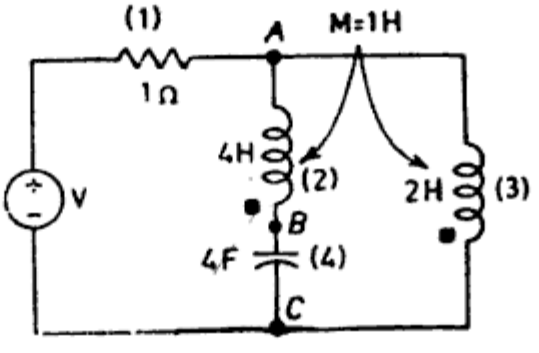


(a)

Copyrighted material

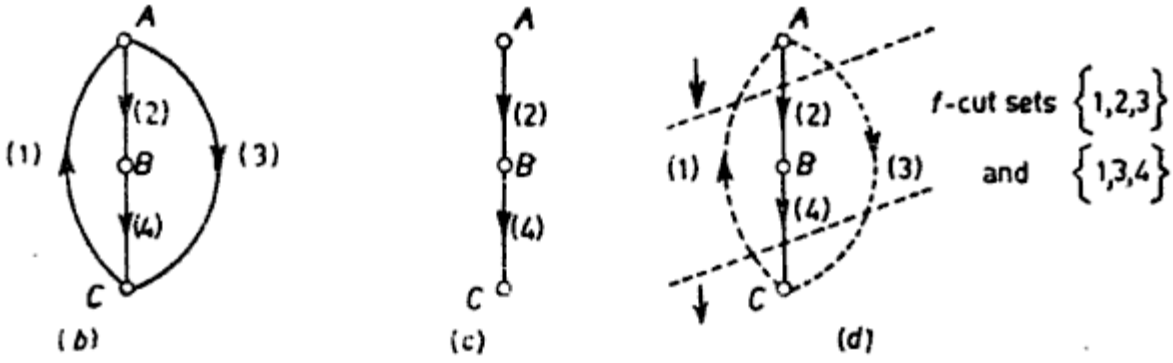


Fig. 3.25. (a) Network of Example 13
(b) directed graph
(c) a possible tree
(d) fundamental cut-set

inductance $M$ will be negative. The branches are numbered as shown in Fig. 3.25(b) and one tree is shown in Fig. 3.25(c).

The $f$-cut-set matrix is formed as

| Tree branch number i.e. $f$-cut-set | | Branch number | | | |
|---|---|---|---|---|---|
| | | 1 | 2 | 3 | 4 |
| $Q =$ | 2 | −1 | 1 | 1 | 0 |
| | 4 | −1 | 0 | 1 | 1 |

$$Q = \begin{bmatrix} -1 & 1 & 1 & 0 \\ -1 & 0 & 1 & 1 \end{bmatrix},$$

$$Q^T = \begin{bmatrix} -1 & -1 \\ 1 & 0 \\ 1 & 1 \\ 0 & 1 \end{bmatrix},$$

$$Z_b = \begin{bmatrix} 1 & 0 & 0 & 0 \\ 0 & 4s & s & 0 \\ 0 & s & 2s & 0 \\ 0 & 0 & 0 & 1/4s \end{bmatrix}$$

Copyrighted material

Therefore the branch admittance matrix

$$Y_b = [Z_b]^{-1} = \begin{bmatrix} 1 & 0 & 0 & 0 \\ 0 & 4s & s & 0 \\ 0 & s & 2s & 0 \\ 0 & 0 & 0 & 1/4s \end{bmatrix}^{-1} = \begin{bmatrix} [1]^{-1} & 0 & 0 & 0 \\ 0 & \begin{bmatrix} 4s & s \\ s & 2s \end{bmatrix}^{-1} & & 0 \\ 0 & & & \\ 0 & 0 & 0 & [1/4s]^{-1} \end{bmatrix}$$

$$= \begin{bmatrix} 1 & 0 & 0 & 0 \\ 0 & 2/7s & -1/7s & 0 \\ 0 & -1/7s & 4/7s & 0 \\ 0 & 0 & 0 & 4s \end{bmatrix}$$

Therefore, $Q\ Y_b\ Q^T = \begin{bmatrix} 1 + 4/7s & 1 + 3/7s \\ 1 + 3/7s & 1 + 4/7s + 4s \end{bmatrix}$

Given $\quad V_s = \begin{bmatrix} 1 \\ 0 \\ 0 \\ 0 \end{bmatrix}, \ I_s = [0]$

The network equilibrium equation on node basis from Eq. (65) can be written as

$$Q\ Y_b\ Q^T\ V_t = Q\{I_s - Y_b V_s\} = -\ Q\ Y_b\ V_s$$

as

$$I_s = 0$$

where $V_t$ is the tree voltage vector. Substituting the values in

$$QY_bQ^TV_t = -\ QY_bV_s$$

we get

$$\begin{bmatrix} 1 + 4/7s & 1 + 3/7s \\ 1 + 3/7s & 1 + 4/7s + 4s \end{bmatrix} \begin{bmatrix} V_{t1} \\ V_{t2} \end{bmatrix} \quad \begin{bmatrix} 1 \\ 1 \end{bmatrix}$$

EXAMPLE 14. For the resistance network shown in Fig. 3.26(a), calculate the branch voltages and branch currents using voltage variable (node-basis) method.

The graph and the tree of the network are shown in Fig. 3.26(b) and (c), respectively. The fundamental cut-set matrix $Q$ for the selected tree can be written as

Copyrighted material

| Tree branch *f*-cut-set | | Branches 1 | 2 | 3 | 4 | 5 | 6 |
|---|---|---|---|---|---|---|---|
| | 6 | 1 | 0 | 0 | −1 | −1 | 1 |
| $Q =$ | 2 | 0 | 1 | 0 | −1 | −1 | 0 |
| | 3 | −1 | 0 | 1 | 0 | 1 | 0 |

The branch admittance matrix $Y_b$ can be written as

$$Y_b = \begin{bmatrix} 1 & & & & & 0 \\ & 1 & & & & \\ & & 1 & & & \\ & & & 1 & & \\ & & & & 0.5 & \\ 0 & & & & & 0.5 \end{bmatrix}$$

$$\text{Now,} \quad Q^T = \begin{bmatrix} 1 & 0 & -1 \\ 0 & 1 & 0 \\ 0 & 0 & 1 \\ -1 & -1 & 0 \\ -1 & -1 & 1 \\ 1 & 0 & 0 \end{bmatrix}, \quad V_s = \begin{bmatrix} 1 \\ 0 \\ 0 \\ 0 \\ 0 \\ 0 \end{bmatrix}, \quad I_s = [0]$$

The network equilibrium equation (65) on node basis can be written as

$$QY_bQ^TV_t = Q[I_s - Y_bV_s]$$

or,

$$\begin{bmatrix} 3 & 1.5 & -1.5 \\ 1.5 & 2.5 & -0.5 \\ -1.5 & -0.5 & 2.5 \end{bmatrix} \begin{bmatrix} v_{t1} \\ v_{t2} \\ v_{t3} \end{bmatrix} = \begin{bmatrix} -1 \\ 0 \\ 0 \end{bmatrix}$$

Then, by Cramer's rule,

$$v_{t1} = \frac{\Delta_1}{\Delta} = -\frac{2}{3}\,\text{V}, \quad v_{t2} = \frac{\Delta_2}{\Delta} = -\frac{1}{3}\,\text{V}, \quad v_{t3} = \frac{\Delta_3}{\Delta} = -\frac{1}{3}\,\text{V}$$

Copyrighted material

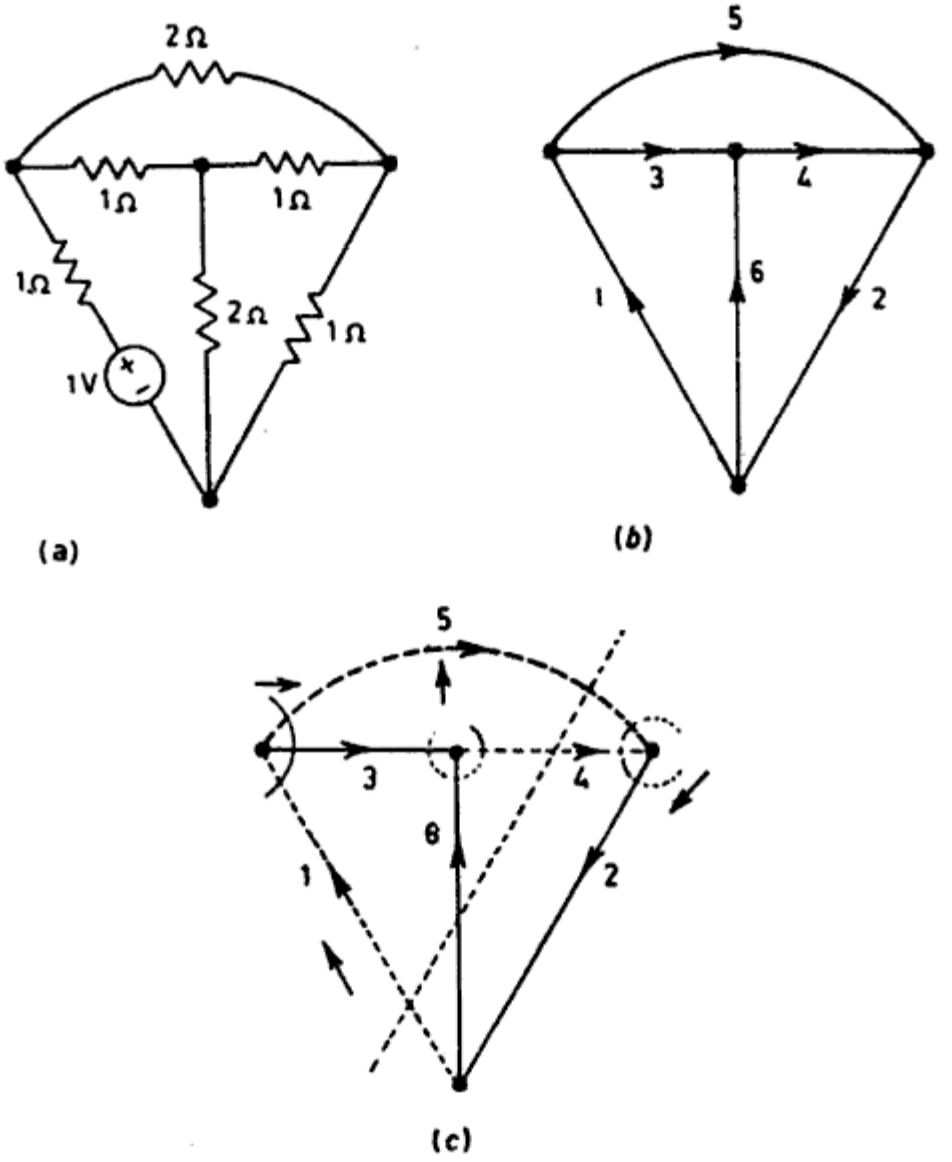


Fig. 3.26. (a) Network of Example 14
(b) directed graph (c) $f$-cut-set

## 3.10 DUALITY

Two networks are said to be dual of each other when the mesh equations of one are the same as the node equations of the other. The two laws of Kirchhoff (KVL and KCL) were almost the same, word for word, with voltage substituted for current, independent loop for independent node pair, etc.

The two graphs $G_1$ and $G_2$ are said to be dual of each other if the incidence matrix of any one of them is a circuit matrix of the other. Thus, dual graphs have the same number of edges. Dual graphs can be drawn in case of planar graphs. Only planar networks without mutual inductances have duals. For mutual inductance, there is no dual relationship. Figure 3.27 shows dual pairs of voltage-current relationship.

Given a network, say $N_1$, construction of the dual network proceeds as follows. Within each mesh of $N_1$ we place a node of what will be the dual

Copyrighted material

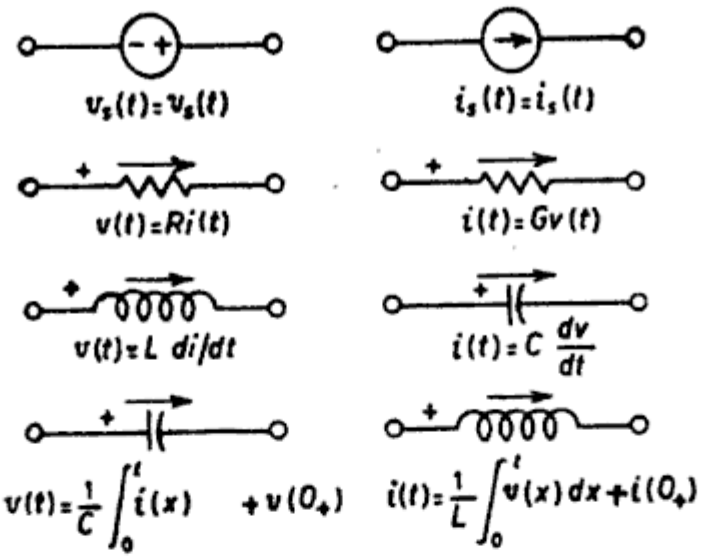


Fig. 3.27. Dual branches

network $N_2$. An additional node, which will be the datum node, is placed outside $N_1$. Across each branch of $N_1$ is placed the dual branch joining the two nodes located inside the two meshes to which that particular branch of $N_1$ is common. In this process, it is convenient to consider the sources as separate branches for the purpose of constructing the dual. Finally, the branch references of $N_2$ are chosen so that the matrix of KVL equations for $N_1$ (with all loops similarly oriented) is the same as the matrix of KCL equations for $N_2$. Because the two networks are mutually dual, the node-admittance matrix of one network equals the loop-impedance matrix of the other, and vice versa.

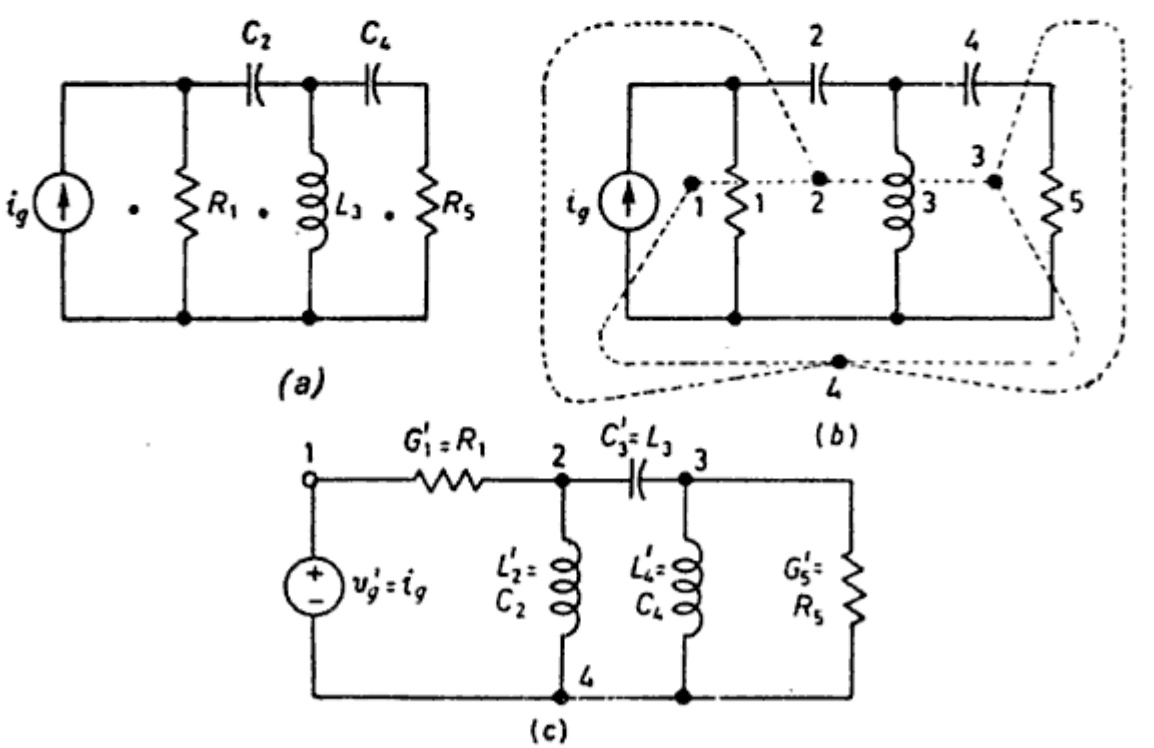


Fig. 3.28. (a) Original network $N_1$
(b) construction of dual
(c) dual network $N_2$

Copyrighted material

As an illustration, consider Fig. 3.28. A node is placed within each mesh and an additional one is placed outside. The dashed lines are used to represent dual branches crossing each of the branches of $N_1$. Finally, the dual is shown in Fig. 3.28(c).

Mesh analysis may be advantageous in series RLC circuit whereas node analysis is suitable for parallel RLC circuit. As they are dual to each other, the resulting equations are

(by KVL), $$L_a \frac{di_a}{dt} + R_a i_a + \frac{1}{C_a}\int i_a\,dt = v_a(t) \tag{66}$$

(by KCL), $$C_b \frac{dv_b}{dt} + G_b v_b + \frac{1}{L_b}\int v_b\,dt = i_a(t) \tag{67}$$

A simple graphical procedure may be followed in finding the dual of the network in Fig. 3.29(a).

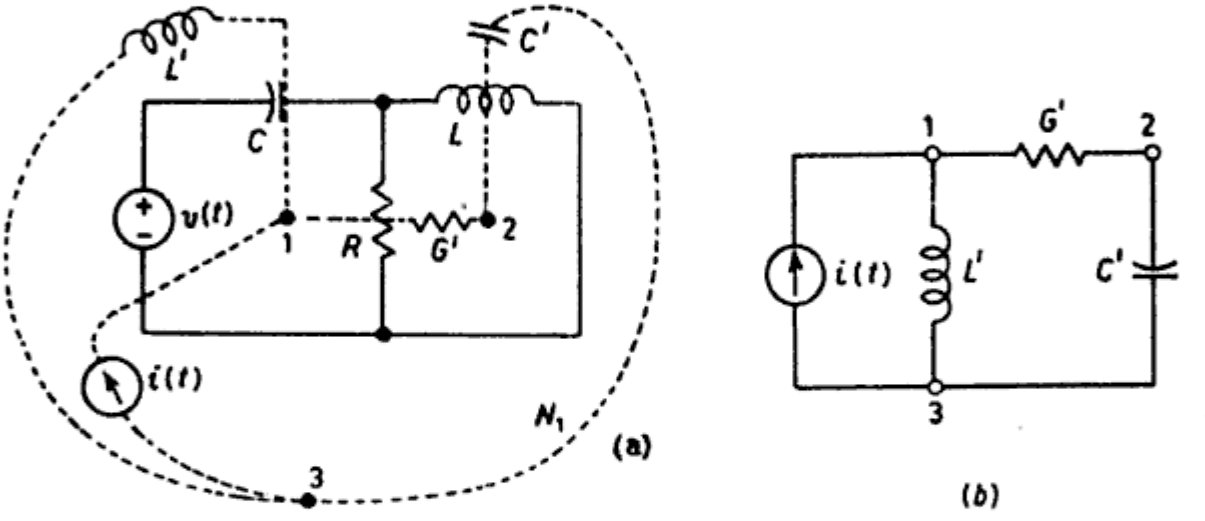


Fig 3.29 (a) Original network
(b) dual network

(i) A node is placed inside each loop. The total number of loops will be equal to the number of cotrees of the original network. Place an extra node, external to the network.

(ii) The nodes are joined through the elements of the original network $N_1$, traversing only one element at a time. For each element traversed in the original network, connect the dual elements from the listing given in Fig. 3 26 for the construction of the dual network.

(iii) The joining lines, along with the dual elements, constitute the dual network $N_2$, as shown in Fig. 3.29(b). This construction can be checked by the node equations of the dual network $N_2$, which will be similar to the loop equations of the original network $N_1$.

We must be careful in making the polarity of the source elements in the dual network. This is illustrated by Fig. 3.30 as follows. Let $N_1$ and $N_2$ be the original and dual network respectively. Assume all mesh currents in $N_1$ to be clockwise. Consider a branch $b_l$ (7) which is a voltage source in $N_1$ and its

Copyrighted material

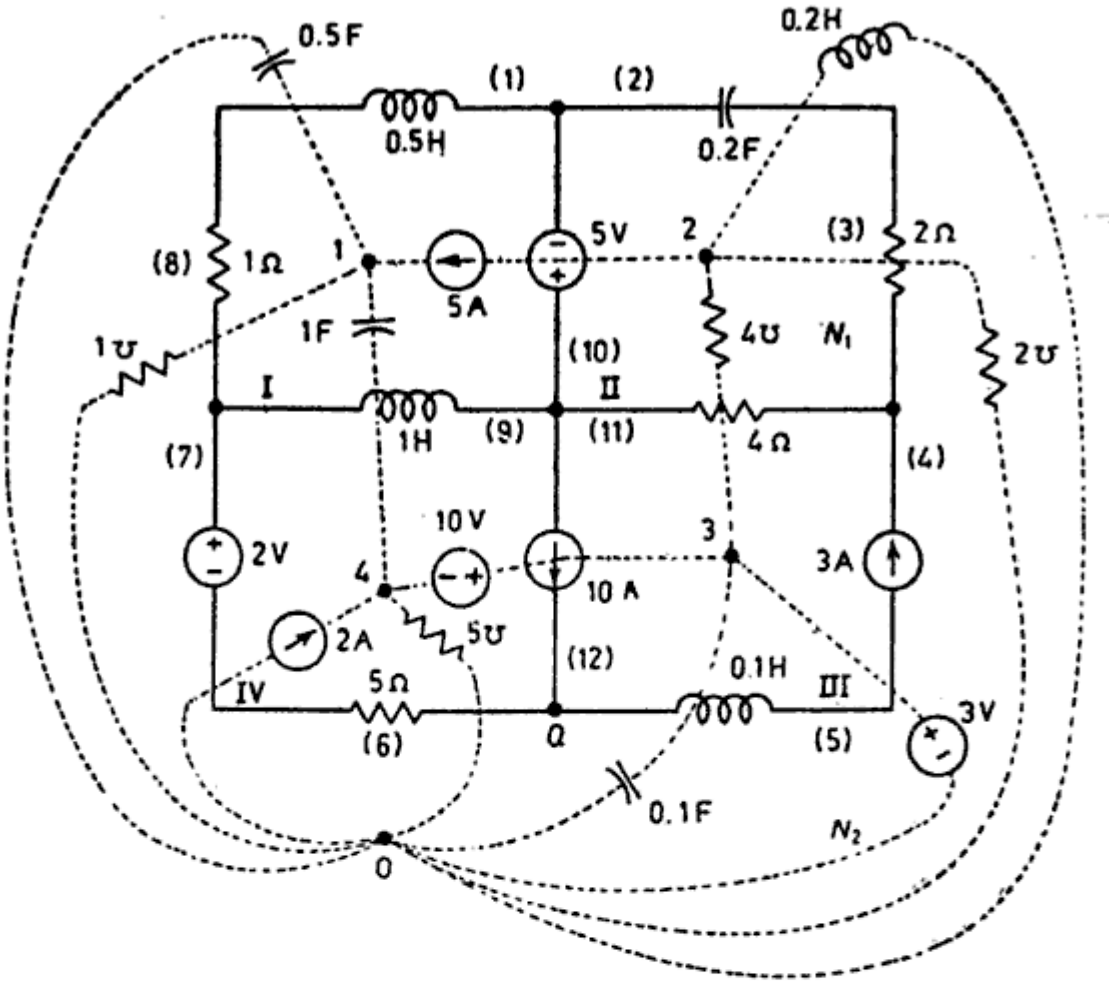


Fig. 3.30. Original network $N_1$ (continuous) and the corresponding dual network $N_2$ (dotted)

corresponding branch in dual network $N_2$ which is a current source. Let $j$ (4) be the dot (and hence a node of $N_2$) placed in mesh number $j$ (iv) containing the branch $b_l(7)$. The current in the current source in $N_2$ corresponding to branch (7) in $N_1$, connected with node $j(4)$ and datum node (0) of $N_2$, is going into node $j(4)$ if the clockwise direction of mesh current of mesh $j$ (iv) is aided by the polarity of the voltage source branch $b_l$ (7) in $N_1$. Otherwise, the direction of the current source in $N_2$ is away from the dot $j(4)$ in $N_2$.

Now consider the case of a branch $b_k$ which is a current source in $N_1$. In order to find the direction of the corresponding voltage source in $N_2$, the reverse procedure is adopted, as is done for converting a voltage source in $N_1$ into the current source in $N_2$, because the dual of network $N_2$ is $N_1$.

Consider branch (12) in $N_1$, which is a current source and its corresponding branch in the dual network $N_2$ which is a voltage source. Again, the dual of $N_2$ is $N_1$, Let a mesh in $N_2$ having one of the nodes $Q$, say of branch (12), inside itself, have been formed traversing through dots 0, 3 and 4, having a voltage source aiding the clockwise direction of the mesh current as the direction of the current source in $N_1$ is into the dot $Q$.

Copyrighted material

Since the direction of current in branch (12) of $N_1$ is into node $Q$ the direction of the voltage source of corresponding branch (12) in $N_2$ will be the same to the clockwise loop-current direction of the loop in $N_2$, traversing through dots 0, 3 and 4 consisting of corresponding branches (12), (5) and (6) of $N_1$. Similarly the current source of branch (4) and voltage source of branch (10) of $N_1$ can be transformed with the proper polarity to get the dual network $N_2$.

The two equations have identical mathematical operation, the only difference being in symbol of letters. The solution of one is also the solution of the other as these two networks are dual. The voltage and current sources have been interchanged. The following are the analogous quantities obtained by inspection of the terms of the two equations which has already been mentioned in Fig. 3.27.

$$i_a \equiv v_b, R_a \equiv G_b, L_a \frac{di_a}{dt} \equiv C_b \frac{dv_b}{dt},$$

$$\frac{1}{C_a}\int i_a\, dt \equiv \frac{1}{L_b}\int v_b\, dt$$

Evidently the following pairs are duals, $R$ and $G$, $L$ and $C$, loops current $i$ and node voltage $v$, $q$ and $\phi$, $\int idt$ and $\int vdt$, loop and node pair, socrce current and source voltage, short circuit and open circuit, etc. For network $N_a$ and $N_b$ to be dual to each other, the corresponding elements bear the following relations:

$$\frac{L_a}{C_b} = 1, \frac{C_a}{L_b} = 1, \text{and} \frac{R_a}{G_b} = 1$$

The numerical values of the mhos in the dual network are related to the ohmic values in the original network by the normalizing factor $g_n^2$. Thus

$$G_j' = g_n^2 R_j$$

where $g_n$ is arbitrarily selected and usally taken to be unity.

A current source $i_s'$ of the dual network is made to correspond to a voltage source $e_s$ of the original network by a normalizing factor $g_n$ if the power delivered by $i_s'$ is to be equal to the power delivered by $e_s$. Thus, for $P_{es}$ to equal $P_{is}$

$$P_{es} = \frac{e_s^2}{R} = \frac{(i_s')^2}{G'} = P'_{is}$$

from which,

$$\frac{i_s'}{e_s} = (G'/R)^{1/2} = g_n$$

The graphical process is illustrated in Fig. 3.31. It will be observed that all the elements common to loop 1 of Fig. 3.31(a) appear as elements which are common to node 1 of the dual network; similarly for the other loops and corresponding nodes. The dual aetwork contains the same number of branches as the original network if the three parallel paths which connect to node 1 (and which are derived from a single-series branch of the original network) are counted as a single branch. It is evident that for algebraic duality, $l$ (the number of independent loop currents) of one network must equal $n$ (the number of

Copyrighted material

independent nodes) of the other. For $l = n$

$$m_t = l + 1 = n + 1 = n_t$$

where $m_t$ is the total number of meshes and $n_t$ is the total number of nodes.

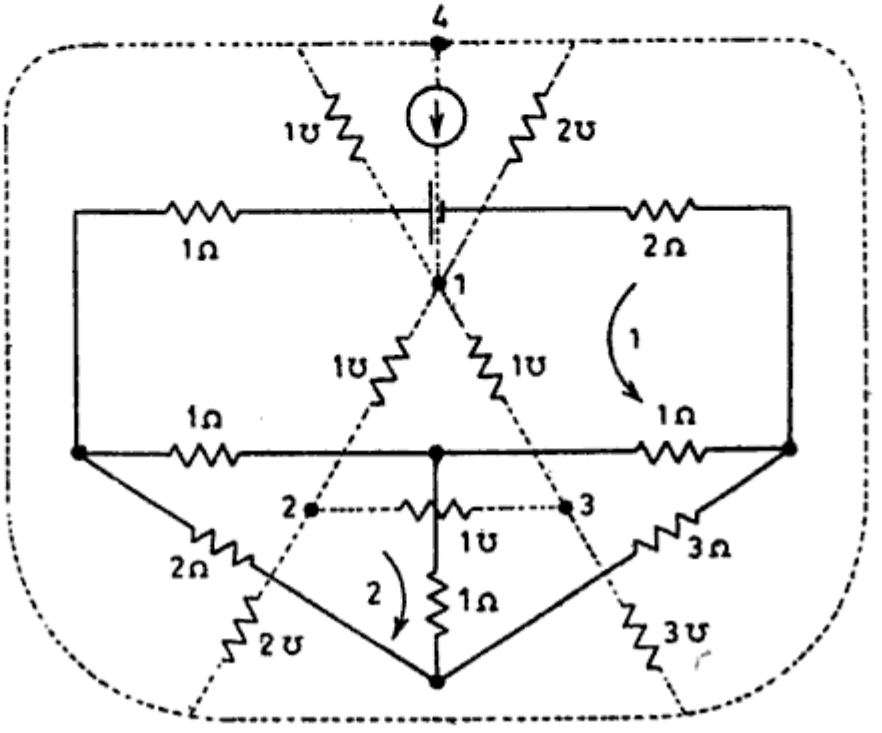


(a)

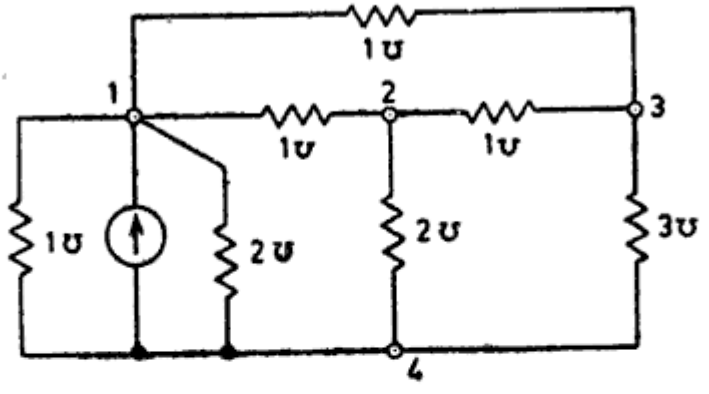


(b)

Fig. 3.31. (a) Original network (b) dual network

## 3.11 GENERAL NETWORK TRANSFORMATIONS

It is convenient to make conversions directly from $T$ to equivalent $\pi$ section, or vice versa, without the necessity of employing the external open and short circuit measurements.

For the $T$ and $\pi$ sections of Fig 3.32(a) and (b) the measurements are as follows :

Copyrighted material

| T section | π section |
|---|---|
| $Z_{1OC} = Z_1 + Z_3$ | $Z_{1OC} = \dfrac{Z_A(Z_B+Z_C)}{Z_A+Z_B+Z_C}$ |
| $Z_{2OC} = Z_2 + Z_3$ | $Z_{2OC} = \dfrac{Z_C(Z_A+Z_B)}{Z_A+Z_B+Z_C}$ (68) |
| $Z_{1SC} = Z_1 + \dfrac{Z_2 Z_3}{Z_2+Z_3}$ | $Z_{1SC} = \dfrac{Z_A Z_B}{Z_A+Z_B}$ |

$Z_{1OC}$ signifies impedance measured at port 1 with port 2 open circuited, $Z_{1SC}$ signifies the impedance measured at port 1 with port 2 short circuited. Similarly, $Z_{2OC}$ and $Z_{2SC}$ are the impedance at port 2 with port 1 open circuited and short circuited, respectively.

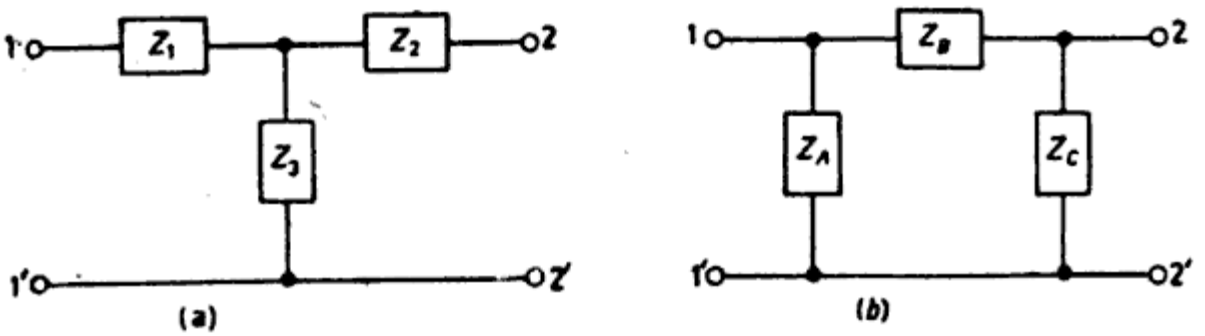


Fig. 3.32. (a) T-network (b) π-network

If the two circuits be equivalent, the external measurements must be equivalent at a given frequency, i.e. $Z_{2OC}$, $Z_{1OC}$ and $Z_{1SC}$'s of both $T$ and π circuits are to be identical.

Equating the measurements obtained in Eq. (68) leads to

$$Z_1 + Z_3 = \frac{Z_A(Z_B+Z_C)}{Z_A+Z_B+Z_C} \tag{69}$$

$$Z_2 + Z_3 = \frac{Z_C(Z_A+Z_B)}{Z_A+Z_B+Z_C} \tag{70}$$

$$Z_1 + \frac{Z_2 Z_3}{Z_2+Z_3} = \frac{Z_A Z_B}{Z_A+Z_B} \tag{71}$$

Subtracting Eq. (71) from Eq. (69) yields

$$Z_3 - \frac{Z_2 Z_3}{Z_2+Z_3} = \frac{Z_A(Z_B+Z_C)}{Z+Z_B+Z_C} - \frac{Z_A Z_B}{Z_A+Z_B}$$

or,

$$\frac{Z_3^2}{Z_2+Z_3} = \frac{Z^2{}_A Z_C}{(Z_A+Z_B+Z_C)(Z_A+Z_B)}$$

Copyrighted material

or, $$Z_3^2 = \frac{Z_A^2 Z_C}{(Z_A + Z_B + Z_C)(Z_A + Z_B)} \times \frac{Z_C(Z_A + Z_B)}{Z_A + Z_B + Z_C}$$

or, $$Z_3 = \frac{Z_A Z_C}{Z_A + Z_B + Z_C}$$

Therefore, from Eq. (69) we get

$$Z_1 = \frac{Z_A(Z_B + Z_C)}{Z_A + Z_B + Z_C} - \frac{Z_A Z_C}{Z_A + Z_B + Z_C} = \frac{Z_A Z_B}{Z_A + Z_B + Z_C}$$

Similarly, putting the value of $Z_3$ in Eq. (70) yields

$$Z_2 = \frac{Z_C(Z_A + Z_B)}{Z_A + Z_B + Z_C} - \frac{Z_A Z_C}{Z_A + Z_B + Z_C} = \frac{Z_B Z_C}{Z_A + Z_B + Z_C}$$

So an equivalent $T$ network can be obtained from the $\pi$ network as

$$Z_1 = \frac{Z_A Z_B}{Z_A + Z_B + Z_C} \tag{71}$$

$$Z_2 = \frac{Z_B Z_C}{Z_A + Z_B + Z_C} \tag{72}$$

$$Z_3 = \frac{Z_A Z_C}{Z_A + Z_B + Z_C} \tag{73}$$

The transformation from $T$ to $\pi$ can be obtained as follows.
Equation (71) can be rewritten as

$$\frac{Z_1 Z_2 + Z_2 Z_3 + Z_3 Z_1}{Z_2 + Z_3} = \frac{Z_A Z_B}{Z_R + Z_B}$$

Substituting Eq. (70), the above equation yields

$$Z_1 Z_2 + Z_2 Z_3 + Z_3 Z_1 = \frac{Z_A Z_B}{Z_A + Z_B} \times \frac{Z_C(Z_A + Z_B)}{Z_A + Z_B + Z_C} = \frac{Z_A Z_B Z_C}{Z_A + Z_B + Z_C}$$

Successive use of Eqs. (72), (73) and (71) in the right-hand side of the above equation gives the conversion of $T$ to $\pi$ network as

$$Z_A = \frac{Z_1 Z_2 + Z_2 Z_3 + Z_3 Z_1}{Z_2} \tag{74}$$

$$Z_B = \frac{Z_1 Z_2 + Z_2 Z_3 + Z_3 Z_1}{Z_3} \tag{75}$$

$$Z_C = \frac{Z_1 Z_2 + Z_2 Z_3 + Z_3 Z_1}{Z_1} \tag{76}$$

The various relations of transformation between $T$ and $\pi$ networks can be summarized through Fig. 3.33. The empedance for a $T$ arm may be obtained from the $\pi$ by noting that the $T$ impedance is calculated by using the product of the two adjacent $\pi$-network impedances divided by the sum of all three $\pi$ impedances. Likewise, a $\pi$-section impedance can be found by use of the sum

Copyrighted material

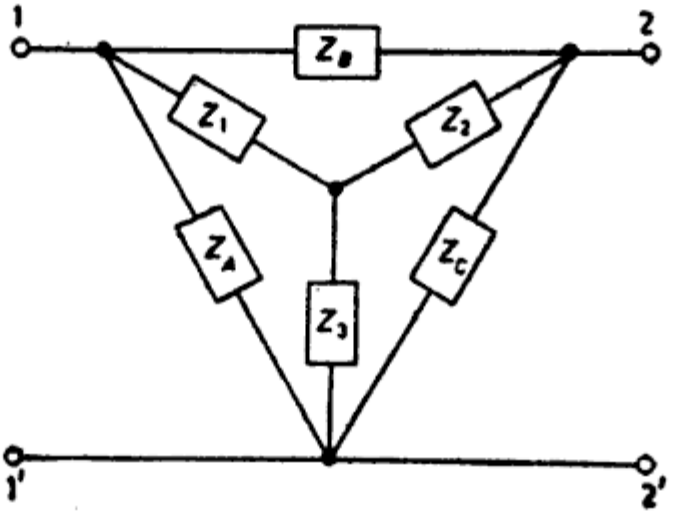


Fig. 3.33. Pictorial summarization

of the double products of the $T$ branches divided by the impedance of the $T$ branch, opposite the desired arm of the $\pi$-network.

If the impedances of the $\pi$ circuit are known, Eqs. (71) to (73) may be used to determine the equivalent $T$ network. Similarly, if the impedances of the $T$ circuit are known, Eqs. (74) to (76) may be used to determine the equivalent $\pi$ network.

Conversions from the $T$ to the equivalent $\pi$ sections when the arms of the given $T$ network in admittance form are obtained as

$$Y_1 = \frac{Y_A Y_B + Y_B Y_C + Y_C Y_A}{Y_C}$$

$$Y_2 = \frac{Y_A Y_B + Y_B Y_C + Y_C Y_A}{Y_A}$$

$$Y_3 = \frac{Y_A Y_B + Y_B Y_C + Y_C Y_A}{Y_B}$$

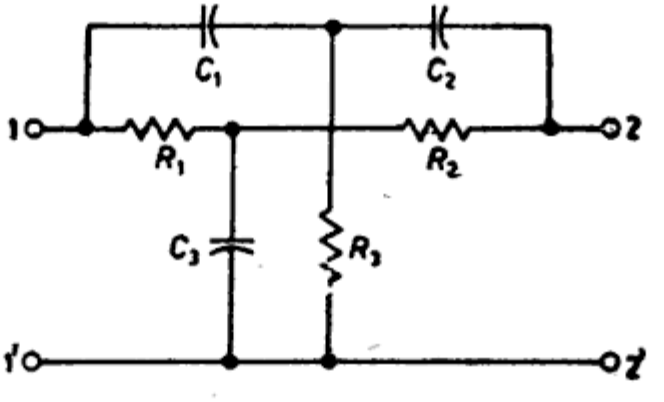


Fig. 3.34. Twin-T network

EXAMPLE 15. In order to find the $\pi$ equivalent of the network in Fig. 3.34, we proceed in the following way. From Fig. 3.35(a), by conversion formula of

Copyrighted material

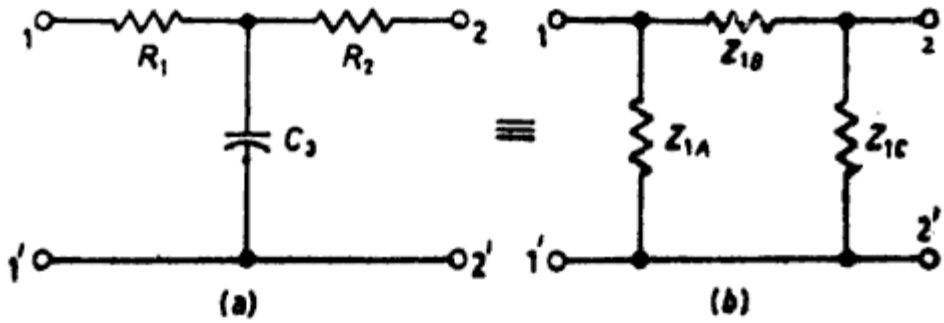


Fig. 3.35. (a) T-network (b) its π-equivalent

$T$ to π, we get

$$Z_{1A} = R_1 - \frac{jX_3(R_1 + R_2)}{R_2},$$

$$Z_{1B} = R_1 + R_2 + \frac{jR_1R_2}{X_3}$$

$$Z_{1C} = R_2 - \frac{jX_3(R_1 + R_2)}{R_1}$$

From Fig. 3.36(a), by conversion formula of $T$ to π, we get

$$Z_{2A} = \frac{R_3(X_1 + X_2)}{X_2} - jX_1$$

$$Z_{2B} = -\frac{X_1X_2}{R_3} - j(X_1 + X_2)$$

$$Z_{2C} = \frac{R_3(X_1 + X_2)}{X_1} - jX_2$$

where $X$ represents the reactance (capacitive).

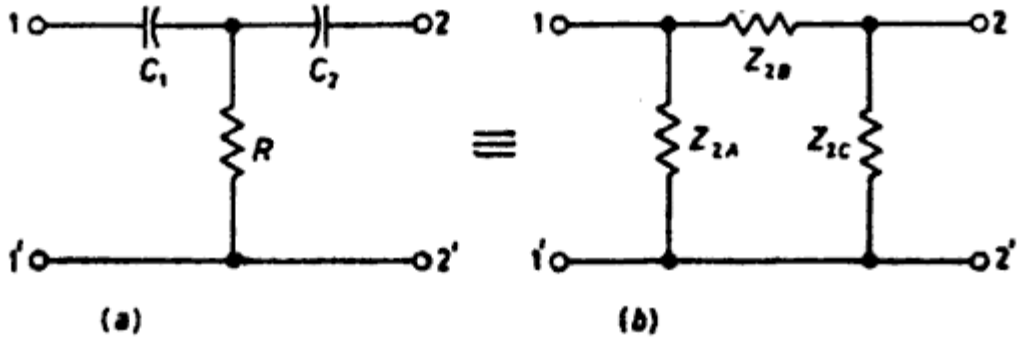


Fig. 3.36. (a) T-network (b) its π-equivalent

The π networks of Fig. 3.35(b) and 3.36(b) may then be placed in parallel, resulting in one π section, as shown in Fig. 3.37 having

$$Z_A = \frac{\left[R_1 - jX_3\left(\frac{R_1 + R_2}{R_2}\right)\right]\left[R_3\left(\frac{X_1 + X_2}{X_2} - jX_1\right)\right]}{\left[R_1 + R_3\left(\frac{X_1 + X_2}{X_2}\right)\right] - j\left[X_1 + X_3\left(\frac{R_1 + R_2}{R_2}\right)\right]}$$

Copyrighted material

$$Z_B = \frac{\left[R_1 + R_2 + j\frac{R_1R_2}{X_3}\right] + j\left[\frac{R_1R_2}{X_3} - X_1 - X_2\right]}{\left[R_1 + K_2 - \frac{X_1X_2}{R_3}\right] + j\left[\frac{R_1R_2}{X_3} - X_1 - X_2\right]}$$

$$Z_C = \frac{\left[R_2 - jX_3\left(\frac{R_1 + R_2}{R_1}\right)\right]\left[R_3\left(\frac{X_1 + X_2}{X_3}\right) - jX_2\right]}{\left[R_2 + R_3\left(\frac{X_1 + X_2}{X_1}\right)\right] - j\left[X_2 + X_3\left(\frac{R_1 + R_2}{R_1}\right)\right]}$$

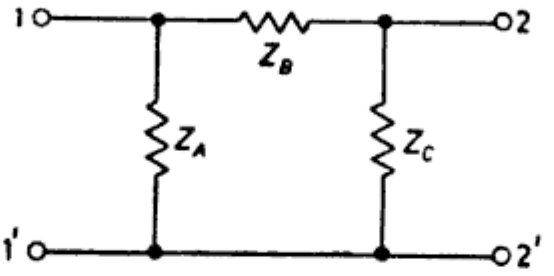


Fig. 3.37. π-equivalent

### 3.11.1 Generalized Star-Delta Transformation

The combination of two resistors connected to a common node can be replaced by a single resistor. The common node is eliminated. The replacement does not, in any way, affect the voltages and the currents in the rest of the circuit, but the new circuit has one fewer node than the original. Thus, the circuit has been simplified. This simplification can be extended to the case of $n$ resistors connected to a common node.

Consider the circuit in Fig. 3.38(a) in which three resistors are connected to a common node 4. The potentials $e_1$, $e_2$, $e_3$ and $e_4$ are with respect to some common datum node (not shown). Writing the KCL equations at nodes 1, 2, 3 and 4 in matrix form, as

$$\begin{bmatrix} 1 & 0 & 0 & -1 \\ 0 & 2 & 0 & -2 \\ 0 & 0 & 3 & -3 \\ -1 & -2 & -3 & 6 \end{bmatrix} \begin{bmatrix} e_1 \\ e_2 \\ e_3 \\ e_4 \end{bmatrix} = \begin{bmatrix} i_1 \\ i_2 \\ i_3 \\ 0 \end{bmatrix}$$

The conductance matrix $G$ having elements $g_{ij}$ can be written as

$$G = \begin{bmatrix} 1 & 0 & 0 & -1 \\ 0 & 2 & 0 & -2 \\ 0 & 0 & 3 & -3 \\ -1 & -2 & -3 & 6 \end{bmatrix}$$

Copyrighted material

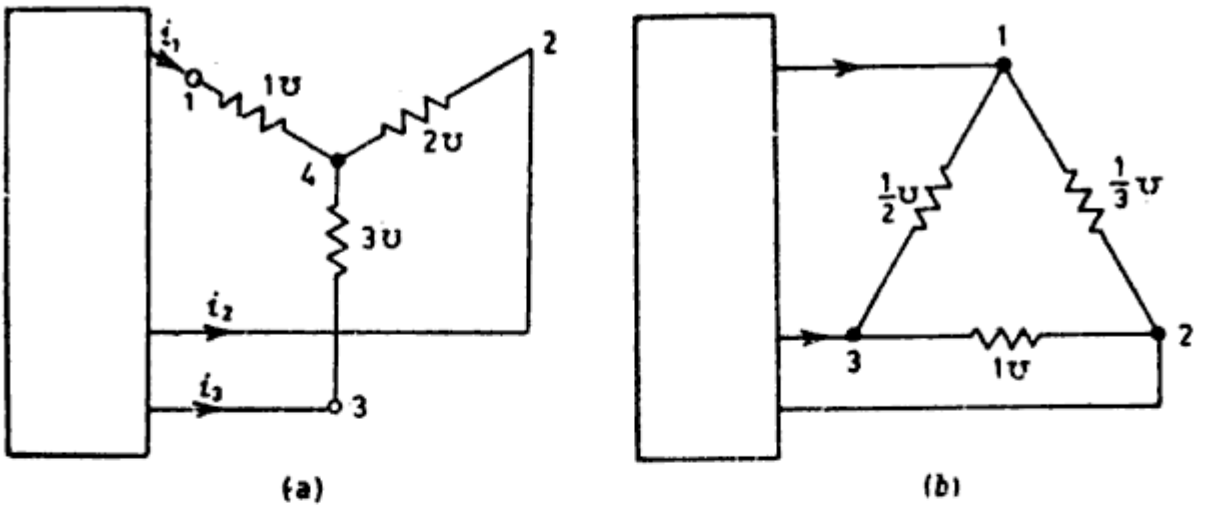


Fig. 3.38. Generalized star-delta transformation

In order to eliminate variable $e_4$, multiply the fourth row by $(g_{14}/g_{44})$ i.e. $(-1/6)$, and subtract from first row; similarly multiply the fourth row by $(g_{24}/g_{44})$ and then subtract from second row; then multiply fourth row by $(g_{34}/g_{44})$ and subtract from third row. Then, the new $G'$ will be

$$G' = \begin{bmatrix} 5/6 & -1/3 & -1/2 & 0 \\ -1/3 & 4/3 & -1 & 0 \\ -1/2 & -1 & 3/2 & 0 \\ -1 & -2 & -3 & 6 \end{bmatrix}$$

The first three rows determine equilibrium equations for the revised graph, in which node 4 is no longer coupled to nodes 1, 2 and 3. Thus, through this process, node 4 has been eliminated from the rest of the network without affecting the other remaining node potentials. The nearly converted Δ-network is shown in Fig. 3.38(b). The transformation relationship can be written in generalized form as:

$$g'_{ij} = g_{ij} - \frac{g_{in}\, g_{nj}}{g_{nn}}$$

where, $i = 1, 2, \ldots, n-1$

$j = 1, 2, \ldots, n.$

Obviously, for $j \neq i$, $g_{ij} = 0$; $i, j = 1, 2, \ldots, n-1$

and then $$g'_{ij} = -\frac{(g_{in}\, g_{nj})}{g_{nn}}$$

where, $j = i+1, \ldots, n-1$

$i = 1, 2, \ldots, n-2$

and for that $g'_{ij} = g'_{ji}$

Copyrighted material

The construction of the resulting network in Fig. 3.38 (b) resulting only coefficients ($g'_{ij}$; $i \neq j$), i.e. $g'_{12}$, $g'_{13}$ and $g'_{23}$ which can be written as

$$-g'_{12} = \tfrac{1}{3}\,\mho$$

$$-g'_{13} = \tfrac{1}{2}\,\mho$$

$$-g'_{23} = 1\,\mho$$

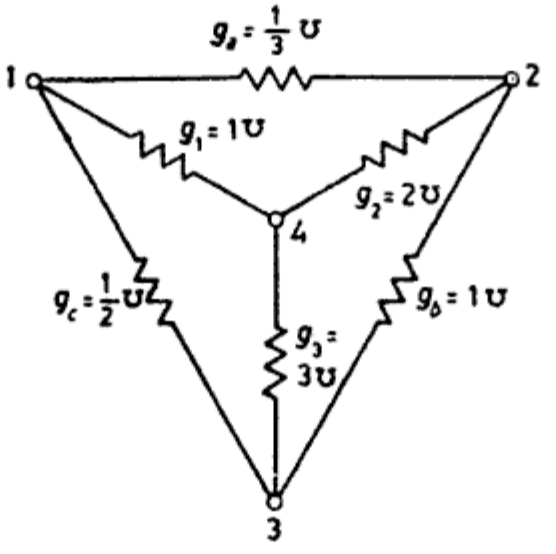


Fig. 3.39. Pictorial summarization of star-delta transformation

This result may be pictorially summerized with the help of Fig. 3.39 as

$$g_a = \frac{g_1 g_2}{g_1 + g_2 + g_3},\ g_b = \frac{g_2 g_3}{g_1 + g_2 + g_3},\ g_c = \frac{g_1 g_3}{g_1 + g_2 + g_3}$$

The generalized transformation from $Y$ to $\Delta$ is well explained by the following illustration in which we have to transform from Fig. 3.40(a) through Fig. 3.40(i). With reference to Fig. 3.40(a), the star of four resistors at node $D$ can be replaced by its equivalent, as in Fig. 3.40 (b). The star-mesh transformation yields a reduction of one node at the price of increasing the number of resistors from $n$ to $n(n-1)/2$, by repeated application, we can reduce a circuit into one that has only one loop and two nodes. Three conductance meeting at a point can be transformed by $Y-\Delta$ transformation. This can be generalized. With four conductances meeting at a point, $D$ can be transformed as in Fig. 3.40 (c) and (d).

$$-g'_{12} = \frac{g_1 g_2}{\Sigma g_i} = \frac{2\times 1}{6} = \frac{1}{3}\,\mho$$

$$-g'_{23} = \frac{g_3 g_4}{\Sigma g_i} = \frac{1\times 2}{6} = \frac{1}{3}\,\mho$$

$$-g'_{34} = \frac{g_3 g_4}{\Sigma g_i} = \frac{2\times 1}{6} = \frac{1}{3}\,\mho$$

$$-g'_{14} = \frac{g_4 g_1}{\Sigma g_i} = \frac{1\times 2}{6} = \frac{1}{3}\,\mho$$

Copyrighted material

$$-g'_{24} = \frac{g_2 g_4}{\Sigma g_t} = \frac{1 \times 1}{6} = \frac{1}{6}\mho$$

$$-g'_{13} = \frac{g_1 g_3}{\Sigma g_t} = \frac{4}{6} \quad = \frac{2}{3}\mho$$

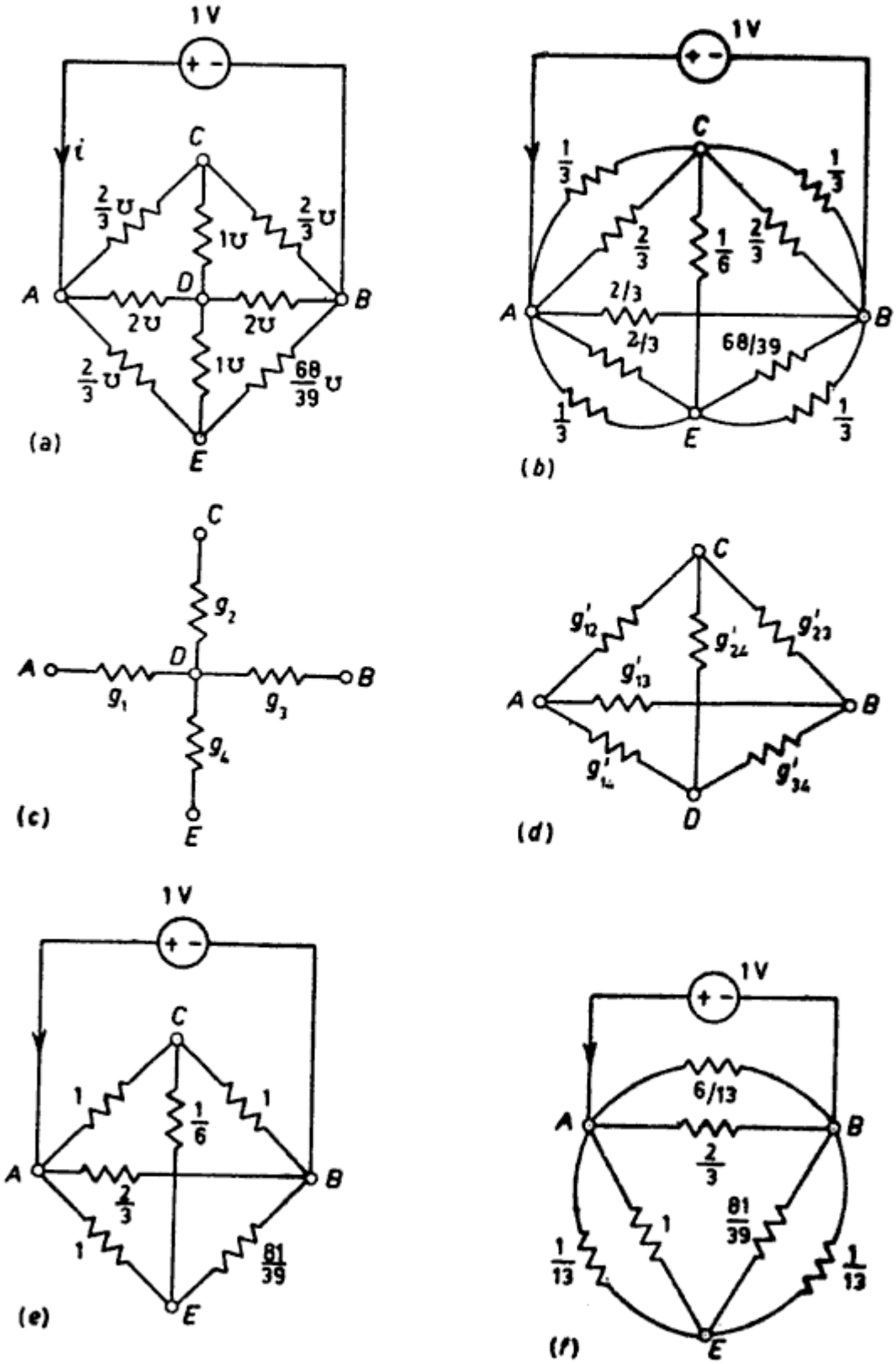


Fig. 3.40. *(contd.)*

Copyrighted material

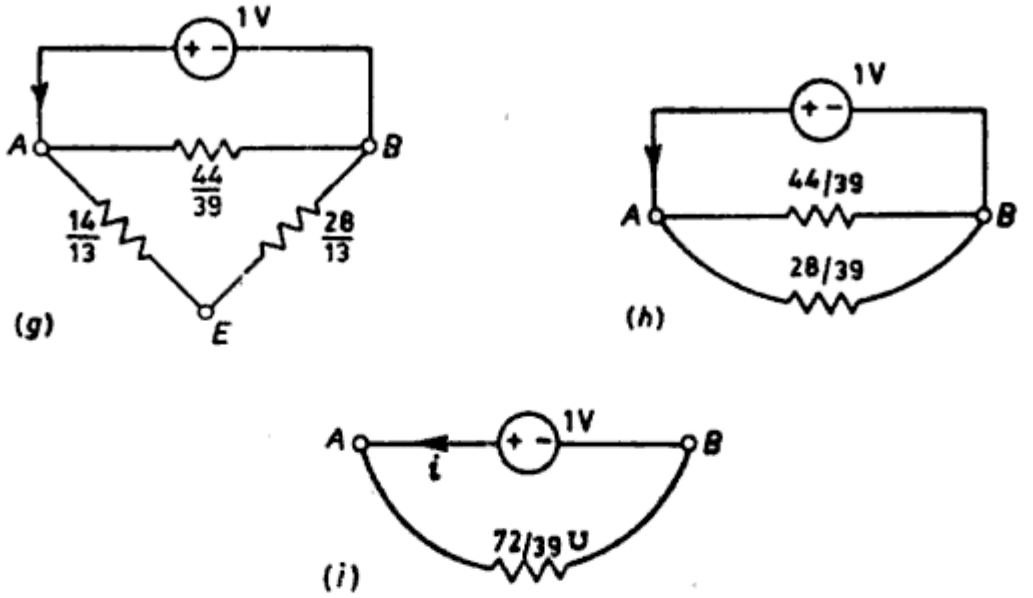


Fig. 3.40. Illustration of generalized star-delta transformation

The conductance in parallel, as in Fig. 3.40(b), can be added and the equivalent circuit is shown in Fig. 3.40 (e). Again, three conductances are meeting at node $C$ in Fig. 3.40 (e). Eliminating node $C$ by the formula given above, the equivalent circuit is as shown in Fig. 3.40 (f). The conductances in parallel are added together to get the equivalent circuit, as in Fig. 3.40(g). Then, Fig. 3.40(h) and (i) are obtained.

The current $i$ passing through the circuit is 72/39 A. We can calculate backward to get the current in different branches of the original circuit in Fig. 3.40(a).

*Delta-Star Transformation*

In the same way $\Delta - Y$ transformation can be done by using KVL equation, referring to Fig. 3.41(a).

$$RI = E$$

$$I = (i_1, i_2, i_3, i_4)^T$$

$$E = (e_1, e_2, e_3, 0)^T$$

where the resistance matrix $R$ having elements $r_{ij}$ as

$$R = \begin{bmatrix} r_1 & 0 & 0 & -r_1 \\ 0 & r_2 & 0 & -r_2 \\ 0 & 0 & r_3 & -r_3 \\ -r_1 & -r_2 & -r_3 & r_{44} \end{bmatrix}, \; r_{44} = r_1 + r_2 + r_3$$

In order to eliminate the 4th loop in which current $i_4$ is flowing, by simple manipulation as done for the transformation from $G$ to $G'$, we get $R'$ as

Copyrighted material

$$R' = (r'_{ij})$$

where, $i, j = 1, 2, 3, 4$ and $r'_{14}, r'_{24}, r'_{34}$ are zero. The fourth mesh current is redundant.

For transformation from $\Delta - Y$, we are interested in

$$r'_{ij} = r_{ij} - \frac{r_{in}\, r_{nj}}{r_{nn}}$$

$$i = 1, 2, \ldots, n-1$$

$$j = 1, 2, \ldots, n$$

Obviously, $r_{ij} = 0$ for $j \neq i$ and $r'_{ij} = r'_{ji}$

The construction of the resulting network of Fig. 3.41 (b) required only the coefficients $r'_{ij}$, $i \neq j$; i.e. $r'_{12}, r'_{13}, r'_{23}$, which are written in the generalized form as

$$r'_{ij} = -\frac{r_{in}\, r_{nj}}{r_{nn}};\ j = i+1, \ldots, n-1 \quad \text{and} \quad i = 1, 2, \ldots, n-2$$

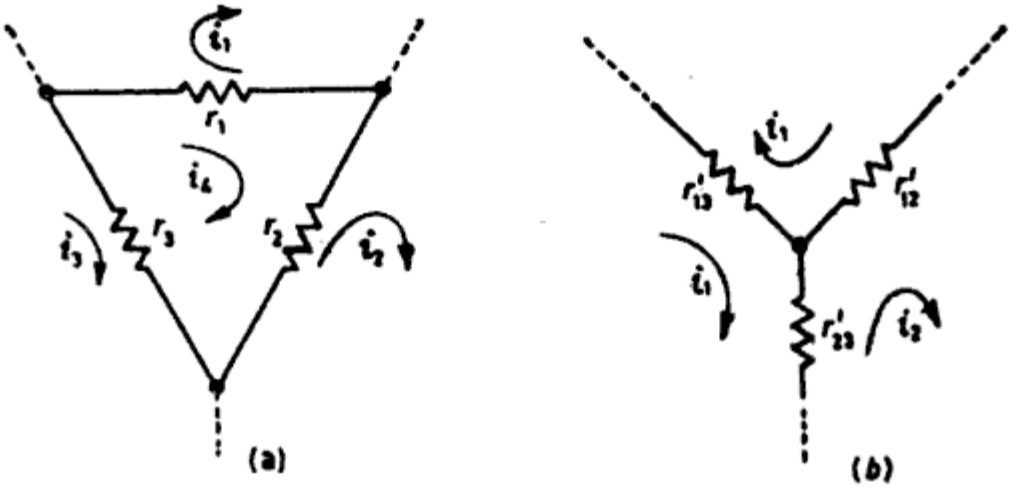


Fig. 3.41. Delta-star transformation

Hence, the star equivalent of $\Delta$ network of Fig. 3.41 (a) having $r_1 = 1\Omega$, $r_2 = 2\Omega$ and $r_3 = 3\Omega$ is shown in Fig. 3.41(b), where

$$-r'_{12} = \frac{r_{14}\, r_{42}}{r_{44}} = \frac{(-1)(-2)}{6} = \frac{1}{3}\,\Omega$$

$$-r'_{13} = \frac{r_{14}\, r_{43}}{r_{44}} = \frac{(-1)(-3)}{6} = \frac{1}{2}\,\Omega$$

$$-r'_{23} = \frac{r_{24}\, r_{43}}{r_{44}} = \frac{(-1)(-3)}{6} = 1\,\Omega$$

This result may be pictorially summarized below, with reference to Fig. 3.42

$$r_A = \frac{r_a\, r_b}{r_a + r_b + r_c}$$

Copyrighted material

$$r_B = \frac{r_b r_c}{r_a + r_b + r_c}$$

$$r_C = \frac{r_c r_a}{r_a + r_b + r_c}$$

The star-mesh or mesh-star equivalent circuits are dual.

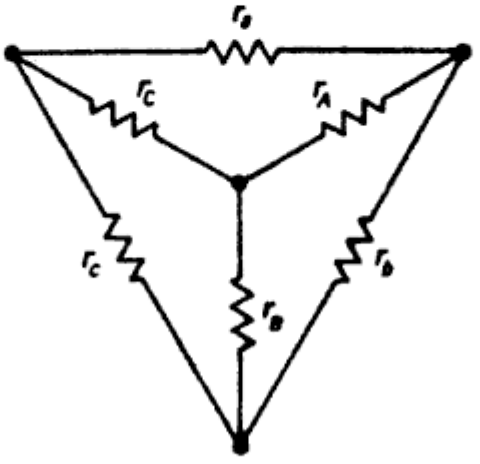


Fig. 3.42. Pictorial summarization of star-delta transformation

## RESUME

A network may be defined as an interconnection of various physical electrical devices. For a complicated network, the solution can be obtained very easily by using network topology. The voltages and currents in various elements or components of a network must satisfy certain 'interconnection equations' (called Kirchhoff's laws) besides their own characteristics. The study of these equations is made simple by abstracting what is known as a 'graph' from the given network. Network topology deals with the study of these graphs. From the fundamental cut-set matrix, the KCL equations are obtained, which leads to node analysis with current source only, from the fundamental circuit matrix, the KVL equations are obtained which leads to mesh analysis with voltage source only. Examples and solutions have been given for networks with mixed sources. By the application of network topology, a minimal set of equations can be obtained for a complicated network.

Node and mesh analysis are dual to each other, and KCL and KVL are dual. For convenience, one can utilise either mesh or node analysis, as the situation demands. Sometimes, the solution of a dual of a complicated network becomes relatively easy and, for that purpose, a short-cut technique for getting the dual is explained.

## SUGGESTED READINGS

1. Balabanian N. and T.A. Bickart, *Electric Network Theory*, John Wiley and Sons, New York, 1969.
2. Seshu, S. and M.B. Reed, *Linear Graphs and Electrical Networks*, Addison-Wesley Publishing Company, Inc., Reading, Mass., 1961.

Copyrighted material

3. Desoer C.A. and E.S. Kuh, *Basic Circuit Theory*, McGraw-Hill Book Company, N.Y., 1969.
4. Balabanian, N. and S. Seshu, *Linear Network Analysis*, John Wiley & sons, Inc., New York, 1959.

## PROBLEMS

1. Branch current and loop current relations are expressed in matrix form as

$$\begin{bmatrix} i_1 \\ i_2 \\ i_3 \\ i_4 \\ i_5 \\ i_6 \\ i_7 \\ i_8 \end{bmatrix} = \begin{bmatrix} 1 & 0 & 0 & -1 \\ 0 & 1 & 0 & -1 \\ 0 & 1 & 1 & 0 \\ 0 & 1 & 1 & 0 \\ 1 & -1 & 0 & 0 \\ 0 & 0 & -1 & 0 \\ -1 & 0 & 0 & 0 \\ 0 & 0 & 0 & 1 \end{bmatrix} \begin{bmatrix} I_1 \\ I_2 \\ I_3 \\ I_4 \end{bmatrix}$$

Draw the oriented graph.

2. The fundamental cut-set matrix is given as

| Twigs | | | | Links | | |
|---|---|---|---|---|---|---|
| 1 | 2 | 3 | 4 | 5 | 6 | 7 |
| 1 | 0 | 0 | 0 | −1 | 0 | 0 |
| 0 | 1 | 0 | 0 | 1 | 0 | 1 |
| 0 | 0 | 1 | 0 | 0 | 1 | 1 |
| 0 | 0 | 0 | 1 | 0 | 1 | 0 |

Draw the oriented graph of the network.

Copyrighted material

3. The incidence matrix is given below as

$$
\begin{array}{cc}
\text{Branches} \Rightarrow & \begin{array}{cccccccc} 1 & 2 & 3 & 4 & 5 & 6 & 7 & 8 \end{array} \\
A = & \begin{bmatrix} 1 & 0 & 0 & 0 & 1 & 0 & 0 & 1 \\ 0 & 1 & 0 & 0 & -1 & 1 & 0 & 0 \\ 0 & 0 & 1 & 0 & 0 & -1 & 1 & -1 \\ 0 & 0 & 0 & 1 & 0 & 0 & -1 & 0 \end{bmatrix}
\end{array}
$$

Draw the oriented graph

4. The network in Fig. P.3 4 is the voltage equivalent of a grounded-grid amplifier. Draw the graph and find a tree. Determine the loop matrix $B$, branch impedance matrix $Z$ and source voltage matrix $V_g$. Then write the loop equation. Solve for the current $I_s$. Determine the driving point admittance $(I_s v_1)$.

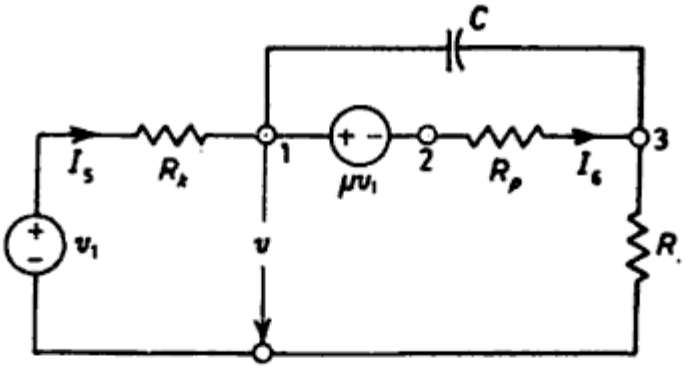


Fig. P.3.4

5. Draw the graph of the networks in Fig. P.3.5.

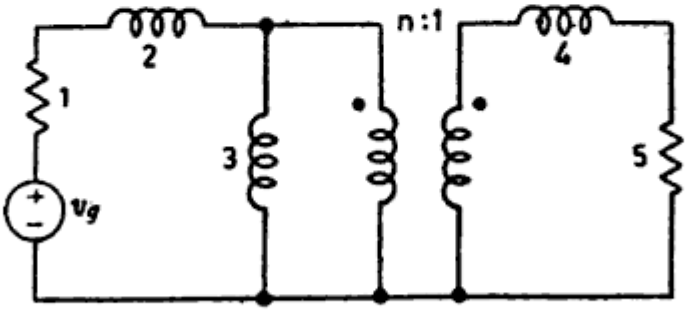


(a)

Copyrighted material

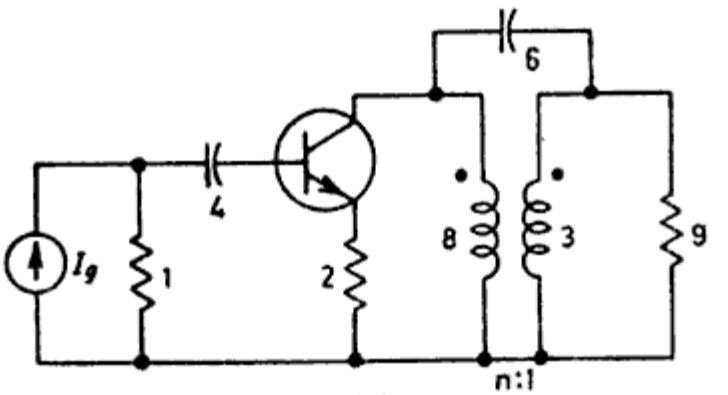


(*b*)

Fig. P. 3.5

6. Draw the dual of the network in Fig. P.3.6.

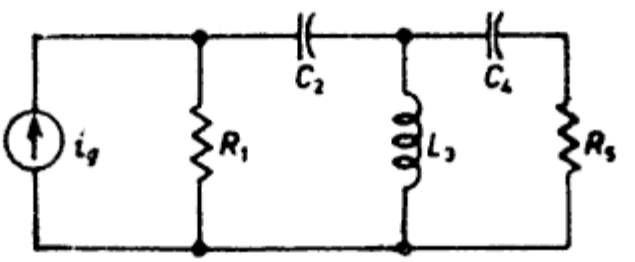


Fig. P. 3.6

7. Draw the oriented graph of the network shown in Fig. P. 3.7. Select loop current variables and write the network-equilibrium equation in matrix form.

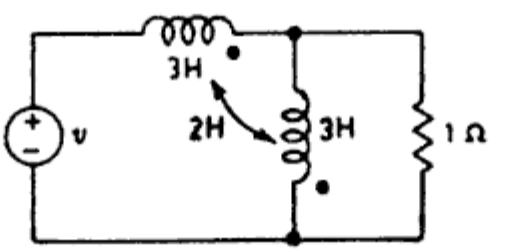


Fig. P. 3.7

8. For the network in Fig. P.3.8, draw the graph, write the tie-set schedule and hence obtain the equilibrium equations on loop basis. Calculate the values of branch currents and branch voltages.

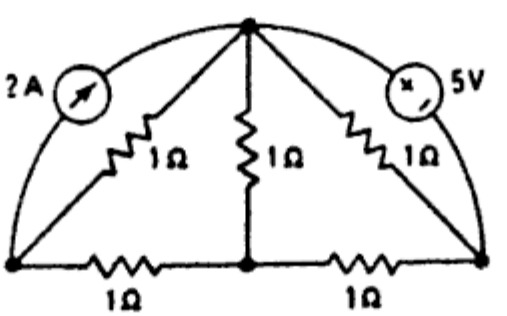


Fig. P.3.8

Copyrighted material

9. Show that the graphs in Fig. P.3.9 are isomorphic.

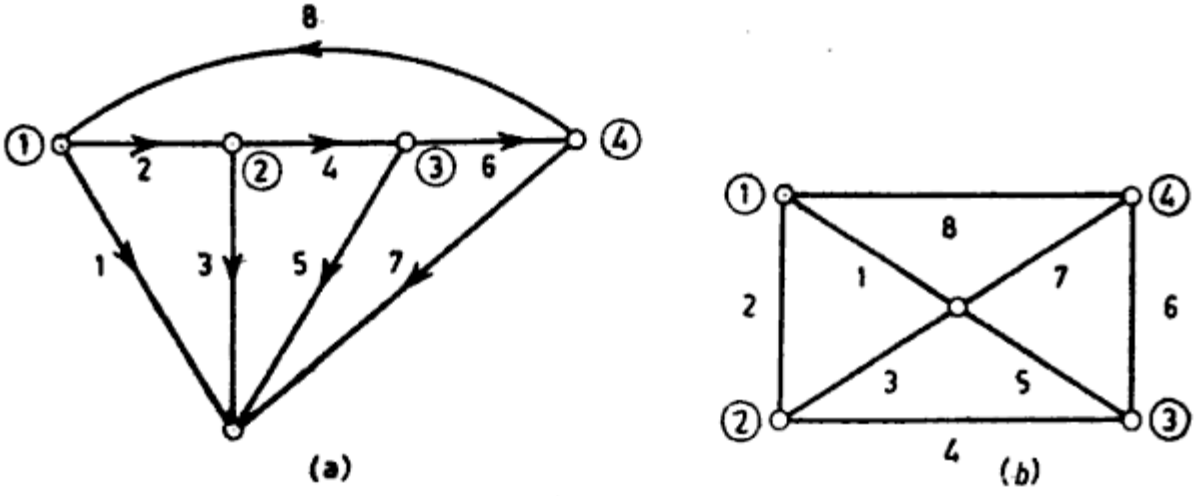


Fig. P. 3.9

10. Draw the directed graph of the network in Fig. P. 3.10, choose a tree, write the cut-set matrix, branch admittance matrix and node-pair equations.

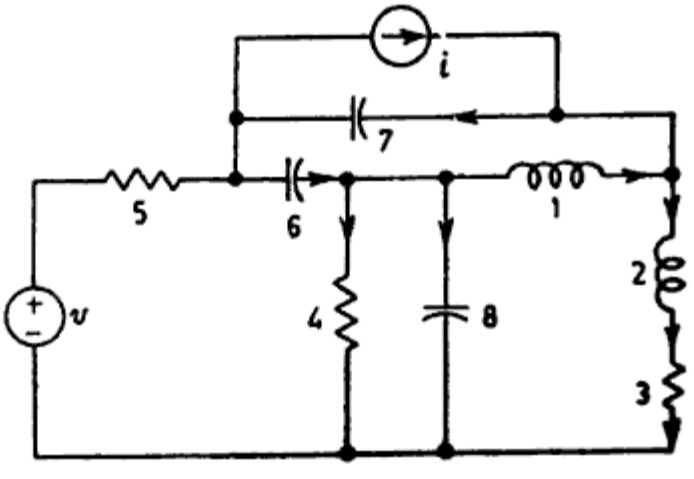


Fig. P. 3.10

For the same graph, write the incidence matrix $A$, loop matrix $B$, and branch impedance matrix. Then determine the loop impedance matrix and write the loop equation in matrix form.

11. Write the incidence matrix of the graph in Fig. P. 3.11 and then express branch voltages in terms of node voltages. Write the loop matrix $B$ and express branch currents in terms of loop currents.

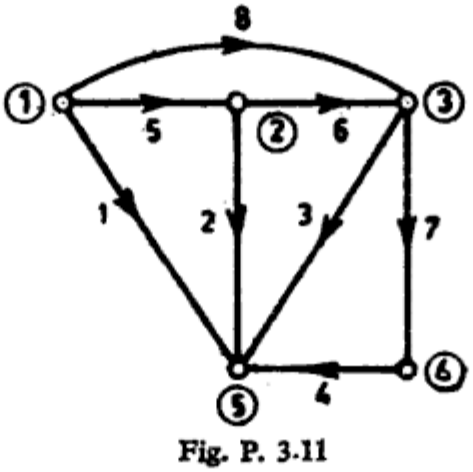


Fig. P. 3.11

Copyrighted material

12. The incidence matrix is given below as

| Branches → | 1 | 2 | 3 | 4 | 5 | 6 | 7 | 8 | 9 | 10 |
|---|---|---|---|---|---|---|---|---|---|---|
| $A =$ | 0 | 0 | 1 | 1 | 1 | 1 | 0 | 1 | 0 | 0 |
| | 0 | −1 | −1 | 0 | 0 | 0 | −1 | 0 | 0 | −1 |
| | −1 | 1 | 0 | 0 | 0 | 0 | 0 | −1 | −1 | 1 |
| | 1 | 0 | 0 | 0 | −1 | −1 | 1 | 0 | 0 | 0 |

Draw the oriented graph.

13. The branch current and loop-current relations are expressed in matrix form as

$$\begin{bmatrix} i_1 \\ i_2 \\ i_3 \\ i_4 \\ i_5 \\ i_6 \\ i_7 \\ i_8 \end{bmatrix} = \begin{bmatrix} 1 & 0 & 0 & -1 \\ 0 & 1 & 0 & -1 \\ 0 & 1 & 1 & 0 \\ 0 & 1 & 1 & 0 \\ 1 & -1 & 0 & 0 \\ 0 & 0 & -1 & 0 \\ -1 & 0 & 0 & 0 \\ 0 & 0 & 0 & 1 \end{bmatrix} \begin{bmatrix} I_1 \\ I_2 \\ I_3 \\ I_4 \end{bmatrix}$$

Draw the oriented graph.

14. The fundamental cut-set matrix is given as

| | Twigs | | | Links | | |
|---|---|---|---|---|---|---|
| | a | c | e | b | d | f |
| 2 | 1 | 0 | 0 | 1 | 0 | 1 |
| 4 | 0 | 1 | 0 | 0 | 1 | 1 |
| 5 | 0 | 0 | 1 | 1 | 1 | 1 |

Draw the oriented graph of the network.

15. (a) Define the following terms with reference to a linear graph: (i) tree, (ii) fundamental circuit (iii) fundamental cut-set.

Copyrighted material

(b) Draw the graph of the circuit shown in Fig. P.3.15.

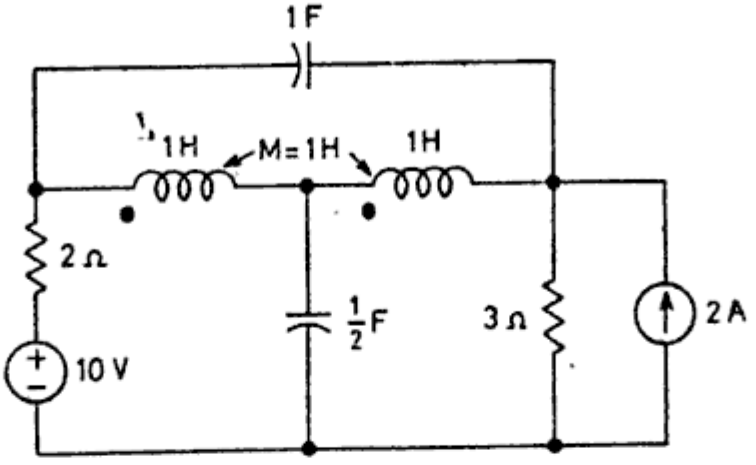


Fig. P.3.15

(i) Select a tree and construct the *f*-circuit matrix,

(ii) Use this *f*-circuit matrix to obtain the loop impedance parameter matrix.

16. Construct the dual of the networks shown in Fig. P.3.16(a to i) wherever possible.

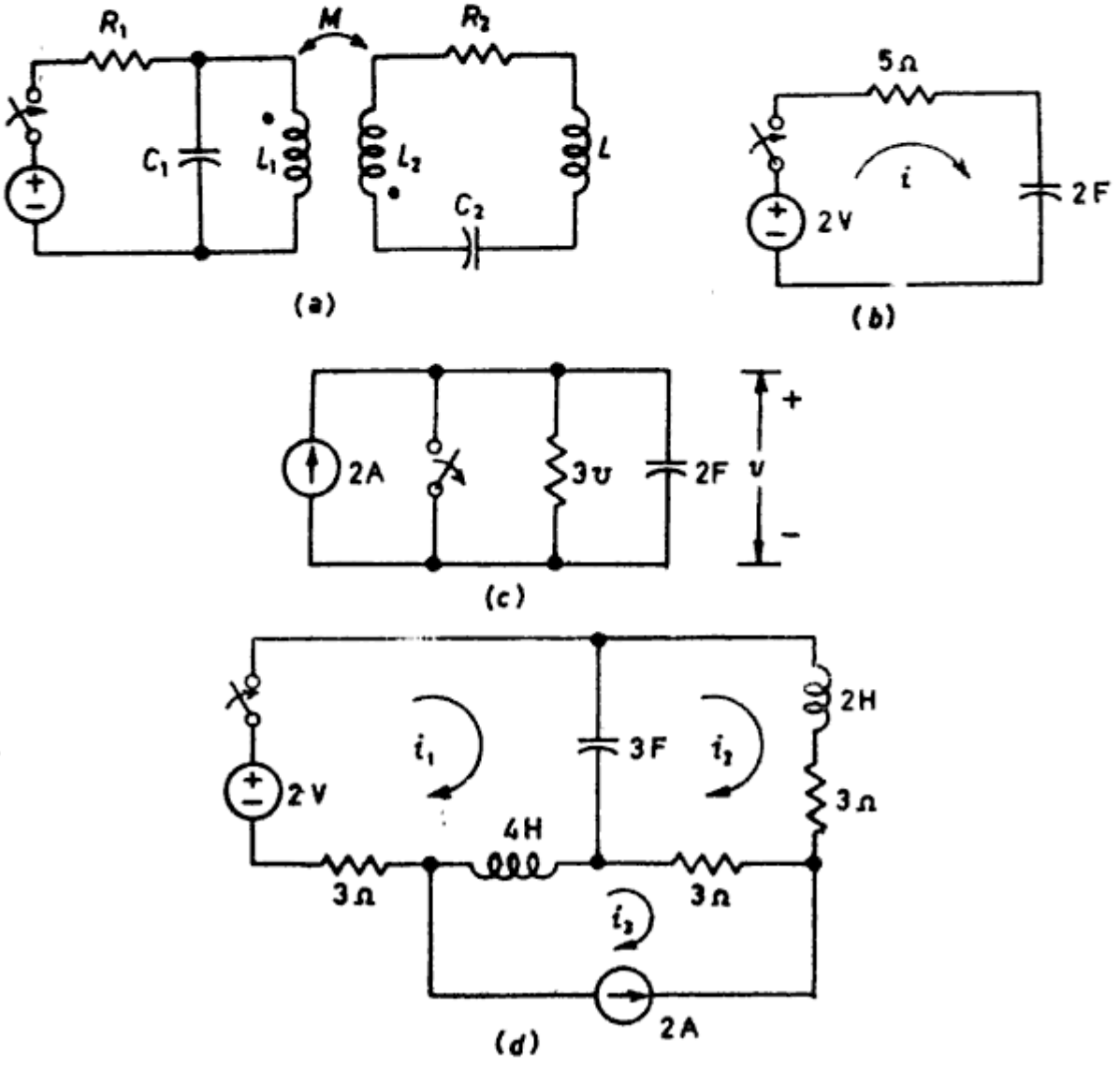


Copyrighted material

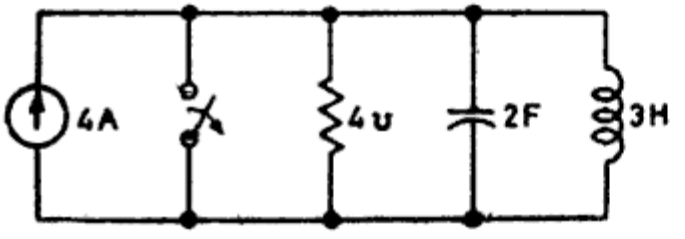


(e)

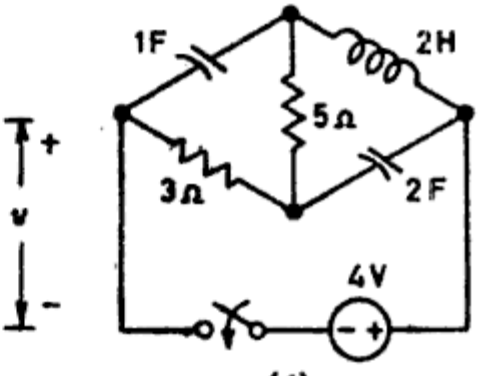


(f)

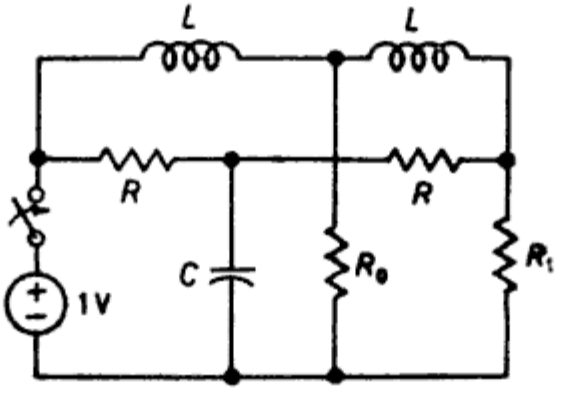


(g)

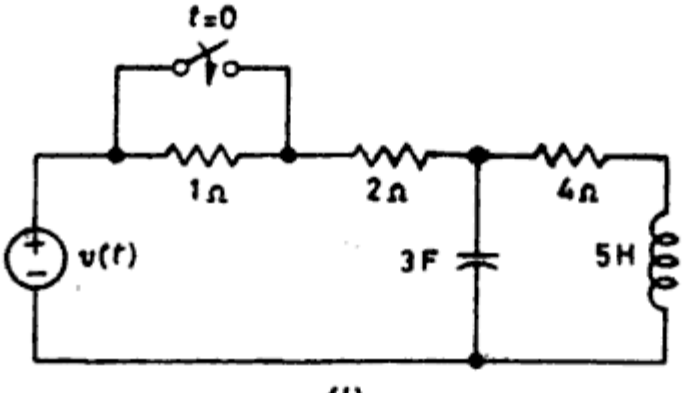


(h)

Copyrighted material

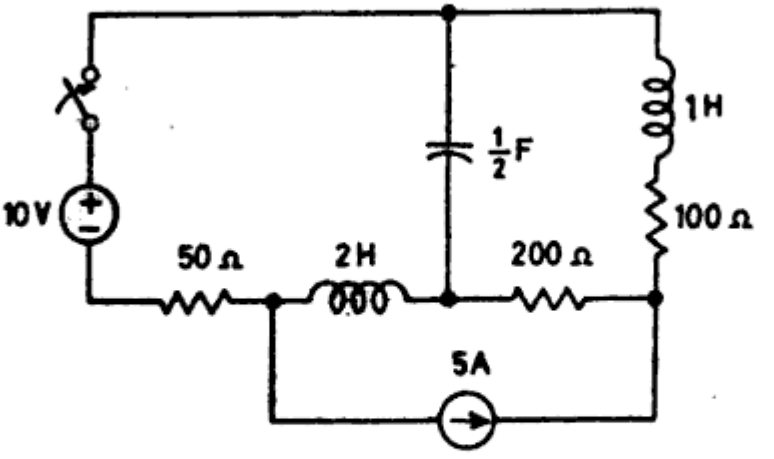


*(i)*

Fig. P.3.16

Copyrighted material

# 4. Fourier Series

## 4.1 INTRODUCTION

Sinusoidal functions occupy a unique position in engineering. They are easy to generate. The steady-state response of a linear system to dc and sinusoidal excitations can be found easily by using the impedance concept. In practice, input signals are of the more complex nature of non-sinusoidal periodic and non-periodic waveforms, as shown in Fig. 4.1. Our aim is to generalize the process of determining the forced response of linear network to such non-sinusoidal functions. In addition, we are interested in the input signal and the network response in terms of their frequency content.

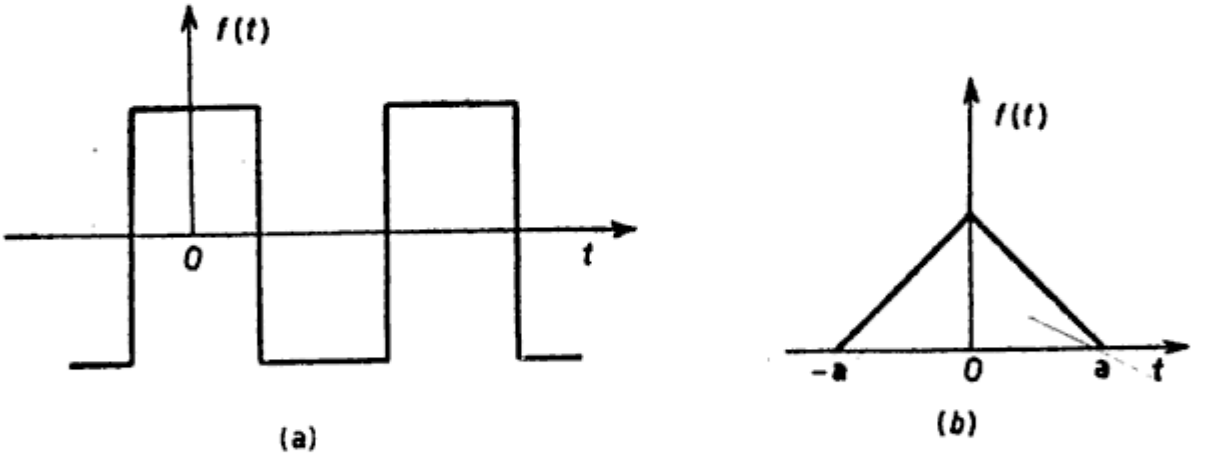


Fig. 4.1. (a) Periodic square waveform
(b) single non-periodic triangular pulse

The French mathematician J.B.J. Fourier (1768–1830) showed that arbitrary periodic functions can be represented by an infinite series of sinusoids of harmonically related frequencies. Periodic functions can be represented by the Fourier series and non-periodic waveforms by the Fourier transform. A signal $f(t)$ is said to be periodic of period $T$ if $f(t) = f(t + T)$ for all $t$. Several signal waveforms that fulfil this requirement are shown in Fig. 4.2.

Fourier series can be represented either in the form of infinite trigonometric series or infinite exponential series. Fourier series consist of dc terms as well as ac terms of all harmonics. Since the forced response to each sinusoidal stimulus may be determined by sinusoidal steady-state analysis, the complete response of a linear circuit to any complex periodic function may be

Copyrighted material

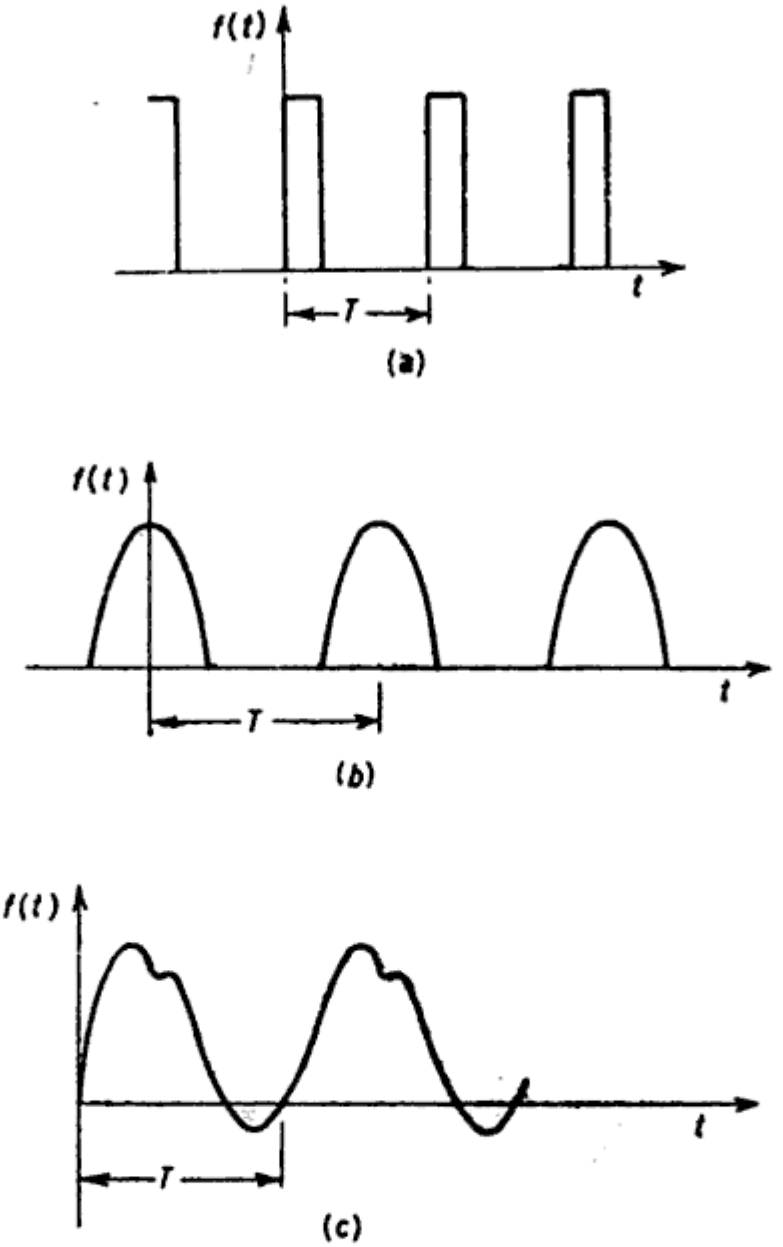


Fig. 4.2. Periodic waveforms

obtained by superposing the component of sinusoid responses. The main task is to evaluate the Fourier coefficients of infinite trigonometric series or of exponential series of periodic complex waveforms. The labour may be reduced by consideration of the symmetry condition of periodic non-sinusoidal waveforms. After studying the representation of a periodic function in the exponential form of the Fourier series, we can extend the concept of analysis to non-periodic functions by introducing the Fourier transform (integrals).

## 4.2 TRIGONOMETRIC FOURIER SERIES

If any function $f(t)$ is periodic and satisfies the Dirichlet conditions, as follows:

1. it has, at most, a finite number of discontinuities in the period $T$;

Copyrighted material