SuperModified V2 - PicoMCU

Copyright 2010 under the Creative Commons Attribution-Share Alike 3.0 License.
http://creativecommons.org/licenses/by-sa/3.0/

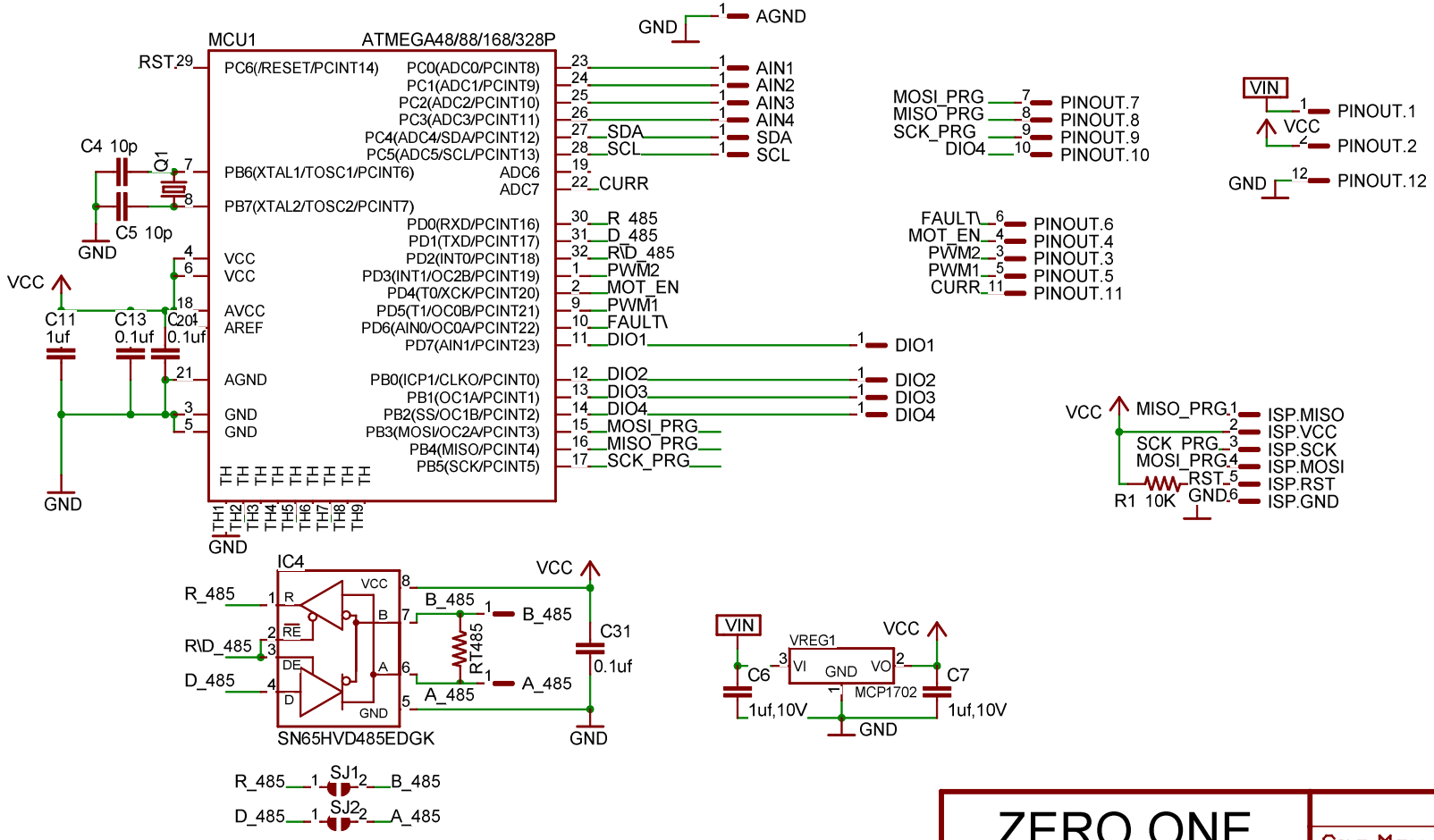

ZERO ONE
Mechatronics

Sms.Mcu
31/03/2010 11:45:50
Sheet: 1/1