SuperModified V2 - Motor Driver MD01

Copyright 2010 under the Creative Commons Attribution-Share Alike 3.0 License.
http://creativecommons.org/licenses/by-sa/3.0/

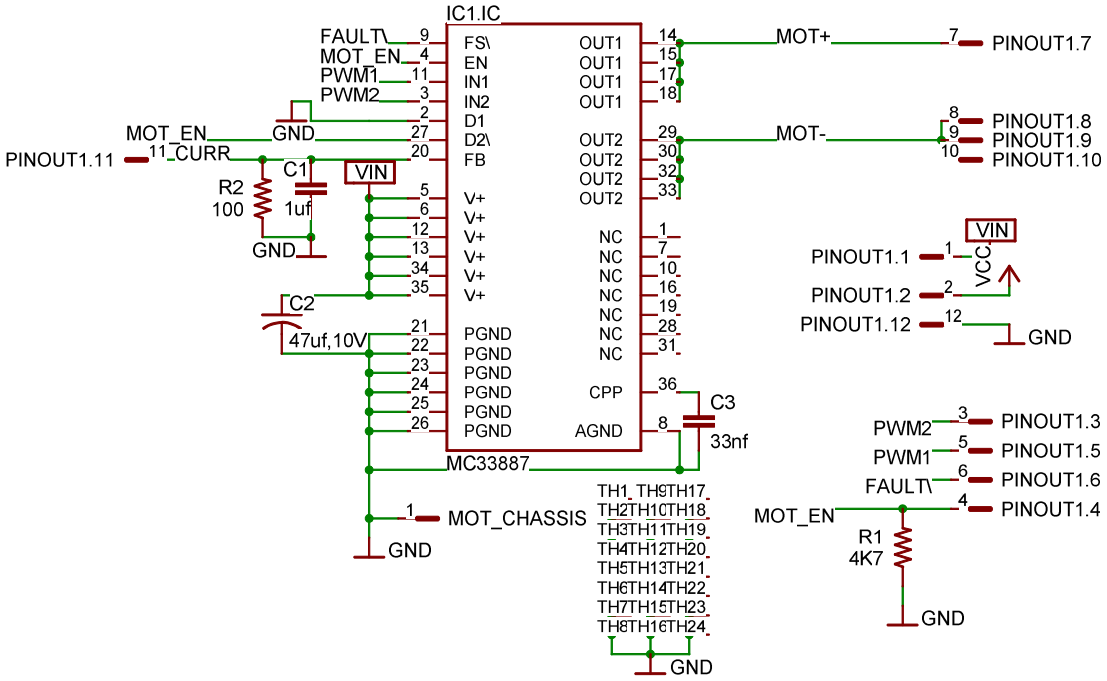

ZERO ONE
Mechatronics

Sms.Pwr
30/03/2010 22:29:41
Sheet: 1/1