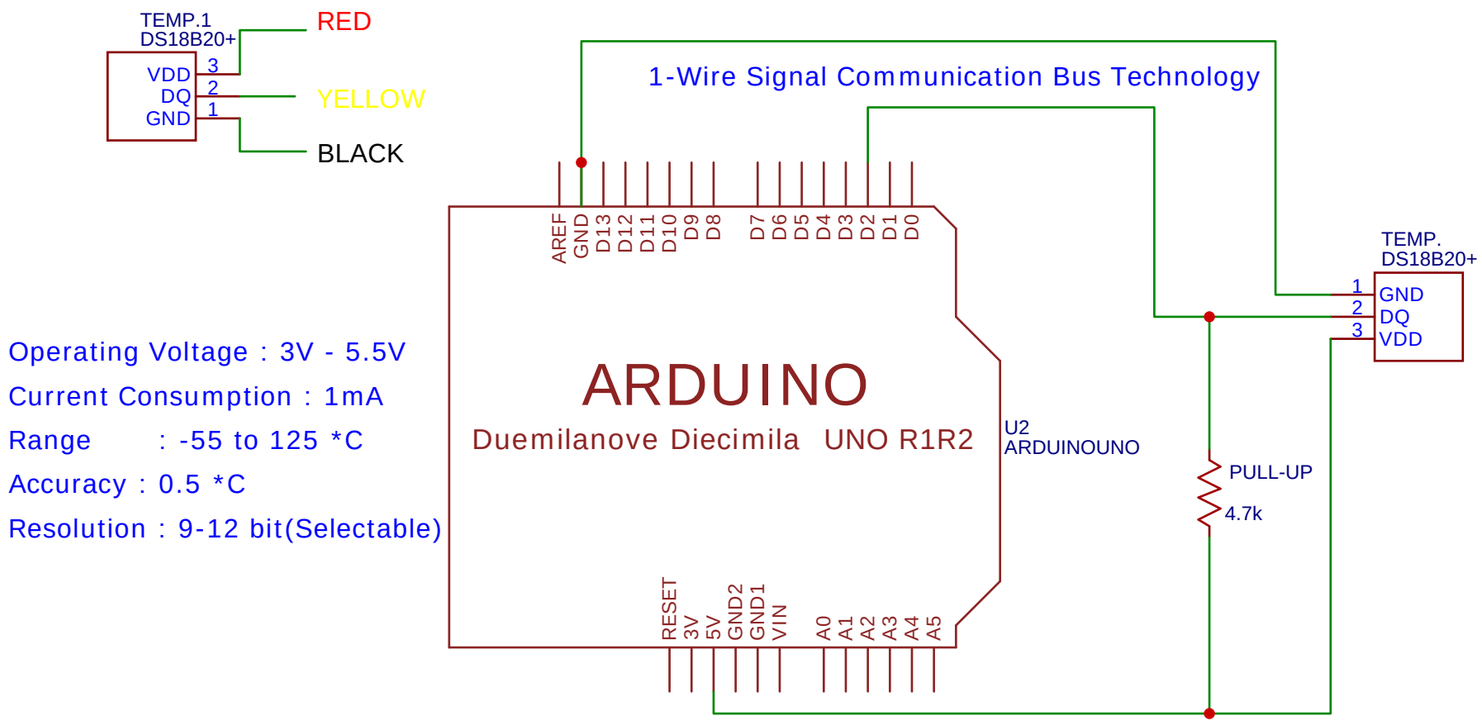


Operating Voltage : 3V - 5.5V

Current Consumption : 1mA

Range : -55 to 125 *C

Accuracy : 0.5 *C

Resolution : 9-12 bit(Selectable)

| | | |
|---|---|---|
| TITLE: Sheet_1 | | REV: 1.0 |
| EasyEDA | Company: Your Company | Sheet: 1/1 |
| | Date: 2022-04-11 Drawn By: | |

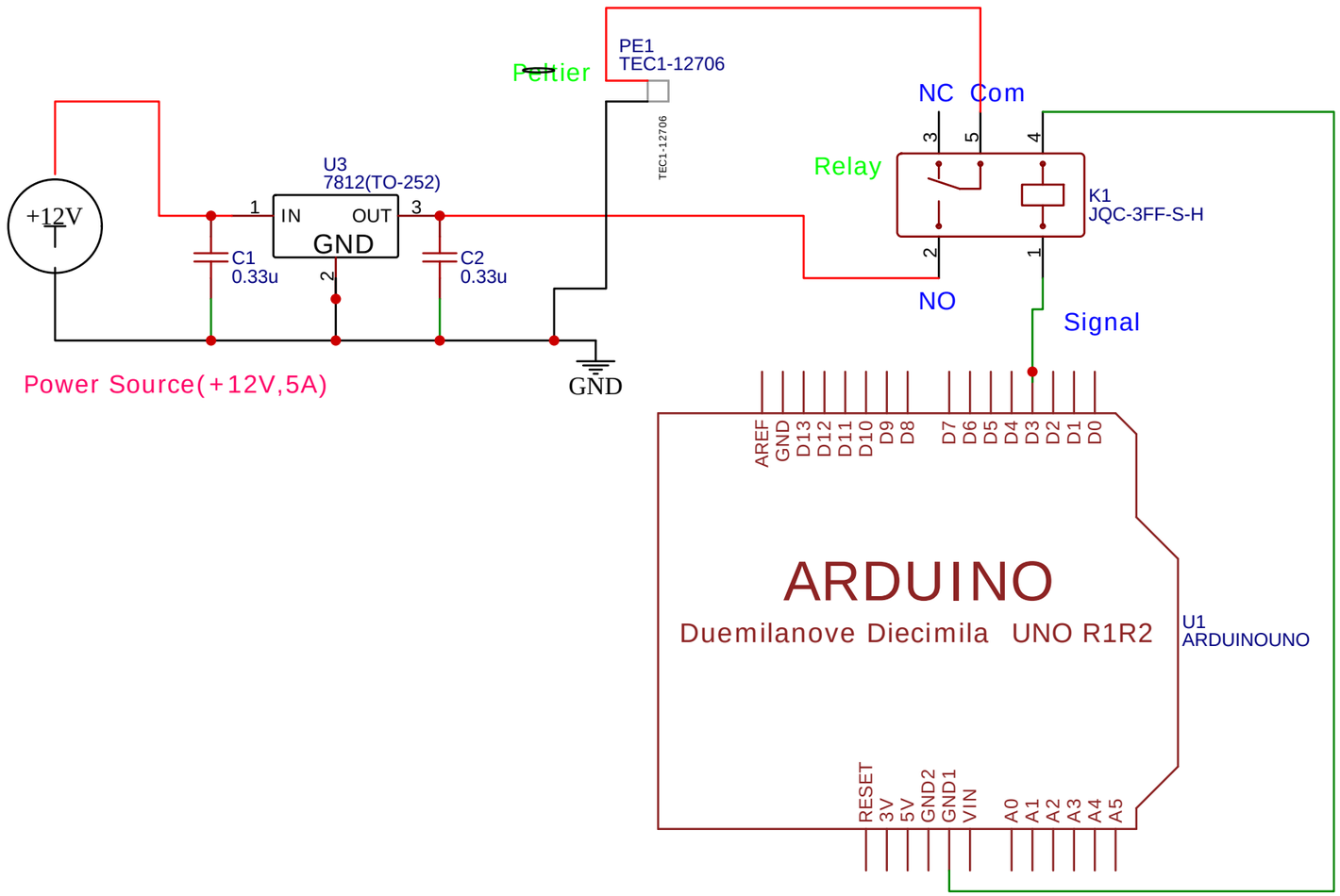


| | |
|---|---|
| TITLE: Sheet_1 | REV: 1.0 |
| EasyEDA — Company: Your Company | Sheet: 1/1 |
| Date: 2022-04-12 Drawn By: | |