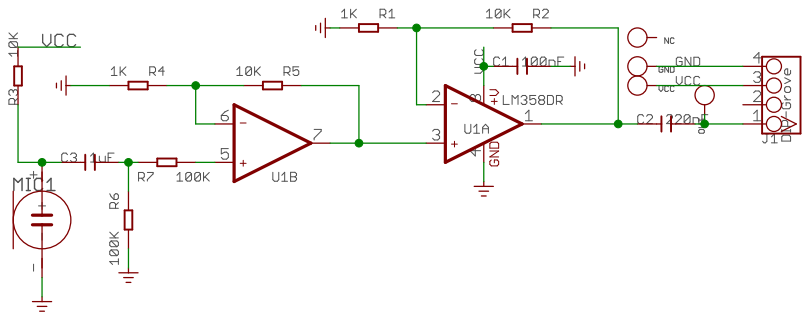

SeeedStudio

TITLE: Grove - Sound Sensor v1.6

Design: wangcf	Check: Bruce	
Date: 14/7/16 ??3:58	Vision: v1.6	Sheet: 1/2