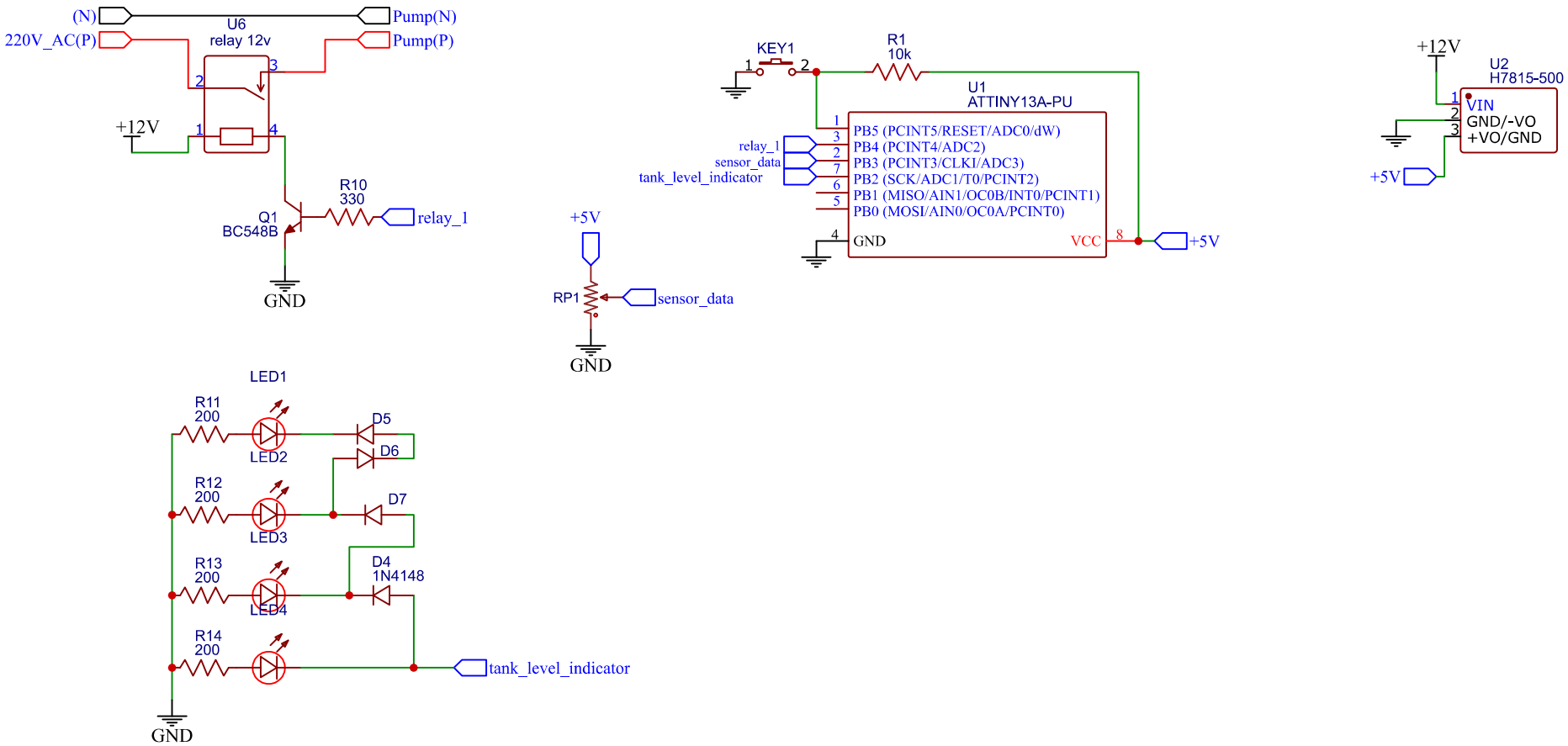

TITLE: Sheet_1		REV: 1.0
	Company: Sourav	Sheet: 1/1
	Date: 2023-07-07 Drawn By: Sourav	