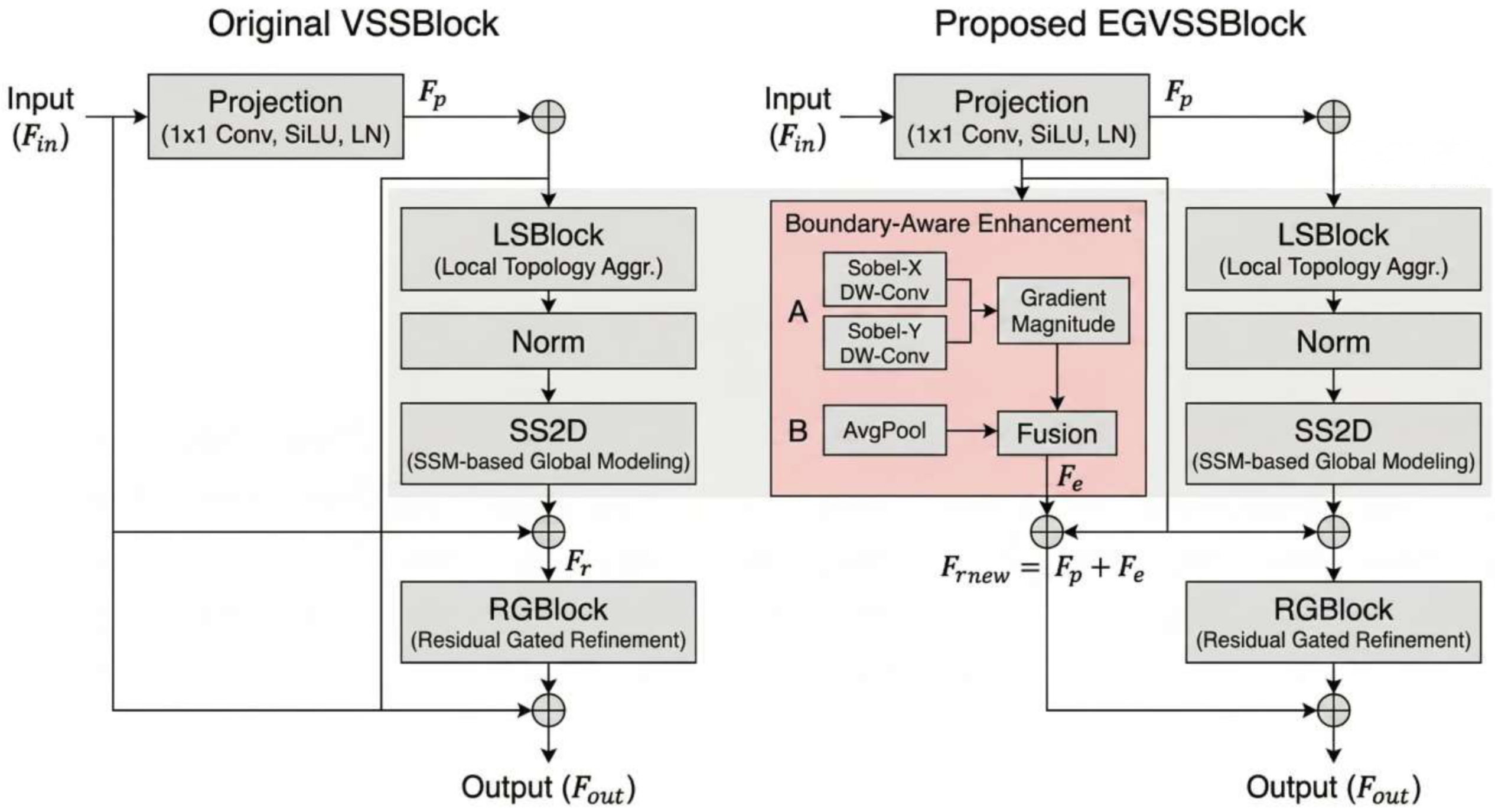
Original VSSBlock
Input (F_{in})
Projection (1x1 Conv, SiLU, LN)
F_p
LSBlock (Local Topology Aggr.)
Norm
SS2D (SSM-based Global Modeling)
F_r
RGBlock (Residual Gated Refinement)
Output (F_{out})
Proposed EGVSSBlock
Input (F_{in})
Projection (1x1 Conv, SiLU, LN)
F_p
Boundary-Aware Enhancement
A
Sobel-X DW-Conv
Sobel-Y DW-Conv
Gradient Magnitude
B
AvgPool
Fusion
F_e
$F_{rnew} = F_p + F_e$
LSBlock (Local Topology Aggr.)
Norm
SS2D (SSM-based Global Modeling)
RGBlock (Residual Gated Refinement)
Output (F_{out})