Frequency Response of Amplifier

Frequency Response:

The response of an amplifier that describes the change in its gain (output) with the frequency of the input signal.

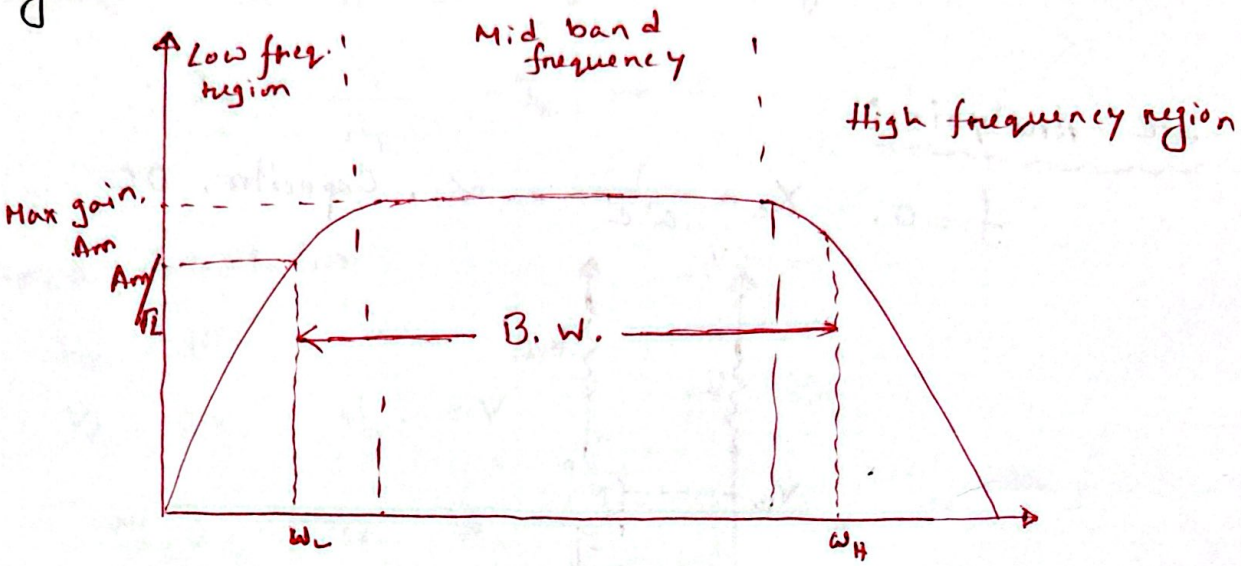

ω_H = upper cut off frequency

ω_L = lower cut off frequency.

B.W = Band width of the amplifier.

BJT, MOSFET → Capacitor Coupled Amplifier.

Review of BJT Amplifier:

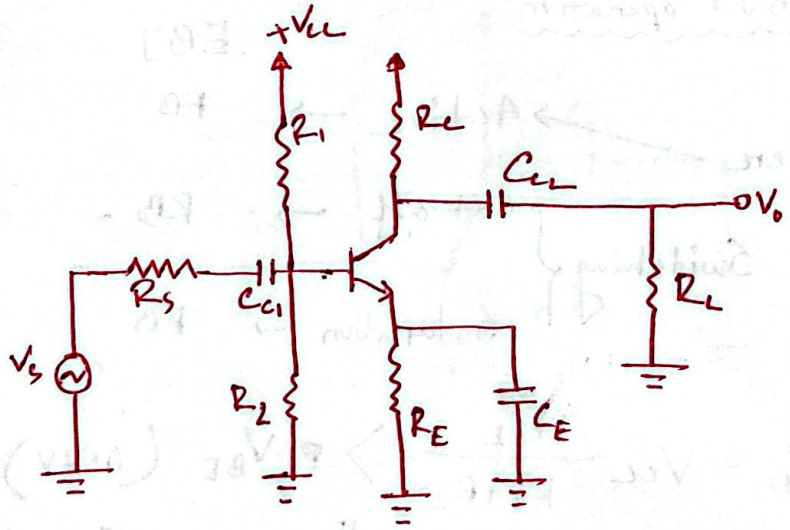

C_{C1}, C_{C2} → Coupling capacitors

C_E → Bypass capacitor.

CE Amplifier Circuit

Coupling Capacitor → Also known as DC blocking capacitor prevents DC voltage levels from interferring with each other betn stages of the amplifier.

Bypass capacitor → provides a low impedance path for AC signals to ground.

DC Analysis :

$f = 0$, $X_c = \frac{1}{\omega C} = \infty$, Capacitor, OC

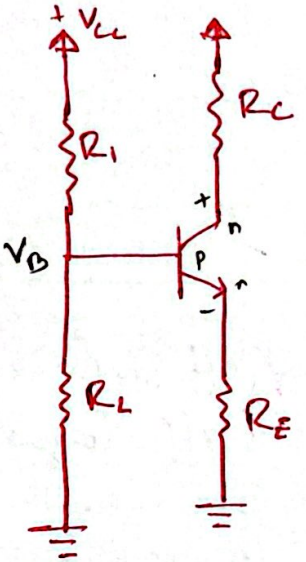

DC Biasing Circuit / Self biasing Circuit

Three modes of BJT operation :

		EBJ	CBJ
Amplifier →	Active →	FB	RB
Switching	Cut off →	RB	RB
	Saturation →	FB	FB

$V_B = V_{cc} \frac{R_2}{R_1 + R_2} > V_{BE}$ (0.7V) (Silicon)

[EBJ, FB condition]

$V_c > V_B$, CBJ RB

} Transistor in active mode

$$V_C = V_{CC} - I_C R_C > V_B \quad \ldots (1)$$

$$I_C = \alpha I_E \quad , \quad \alpha \approx 1$$

$$\therefore I_C = I_E$$

$$V_E = \cancel{V_{BE}}\ V_B - V_{BE}$$

$$\therefore I_E = \frac{V_E}{R_E} = I_C \rightarrow V_C$$

} Forward calculation.

Backward Calculation:

$V_{CC} = 12V$

$V_C = 8V, \quad V_B = 4V$

$$I_C R_C < V_{CC} - V_B$$

$$R_C < \frac{V_{CC} - V_B}{I_C}$$ [Depends on the selection of $I_C I_B$]

Transconductance, $g_m = \frac{I_C}{V_T}$. [if $I_C \uparrow$, $g_m \uparrow$, gain will be high]

AC analysis:

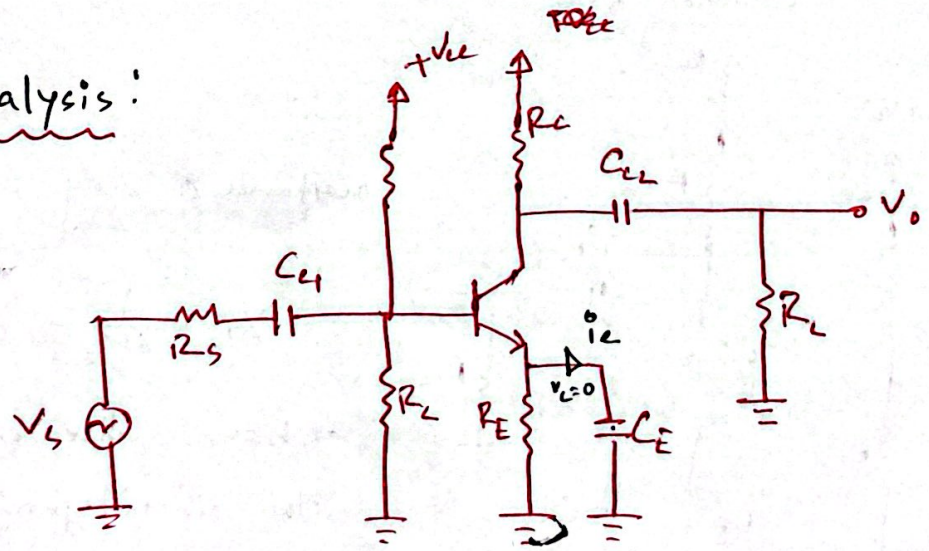

CE amplifier.

[Using the bypass capacitor ac signal voltage become zero, short circuit path] [for CE case]

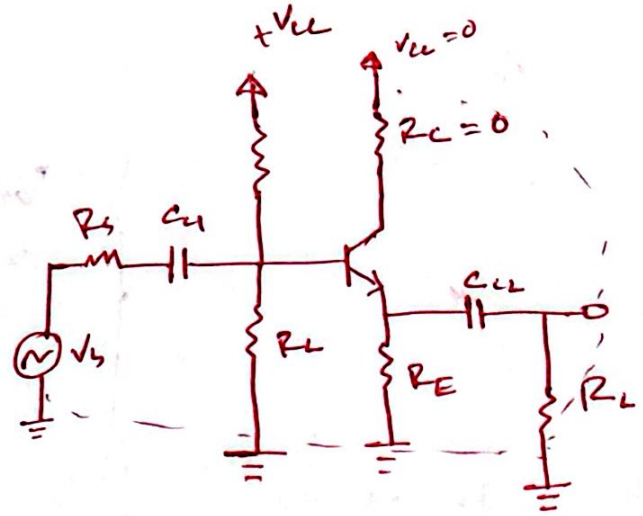

[input → base terminal
- output → emitter terminal
collector → ground potential
$V_c = 0$ [ac]
⇒ $R_c = 0$
short circuited]

Common Collector

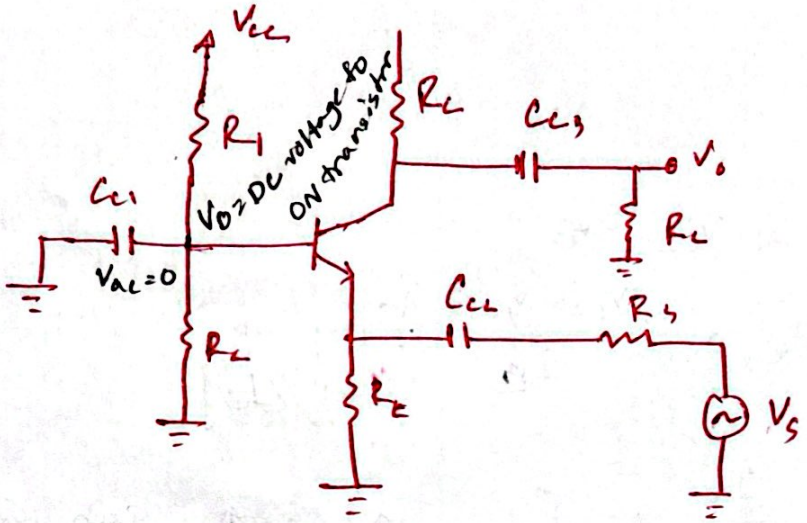

[input → emitter
output → collector
base → grounded using C_1.
only ac voltage equals to zero not the dc]

Common Base

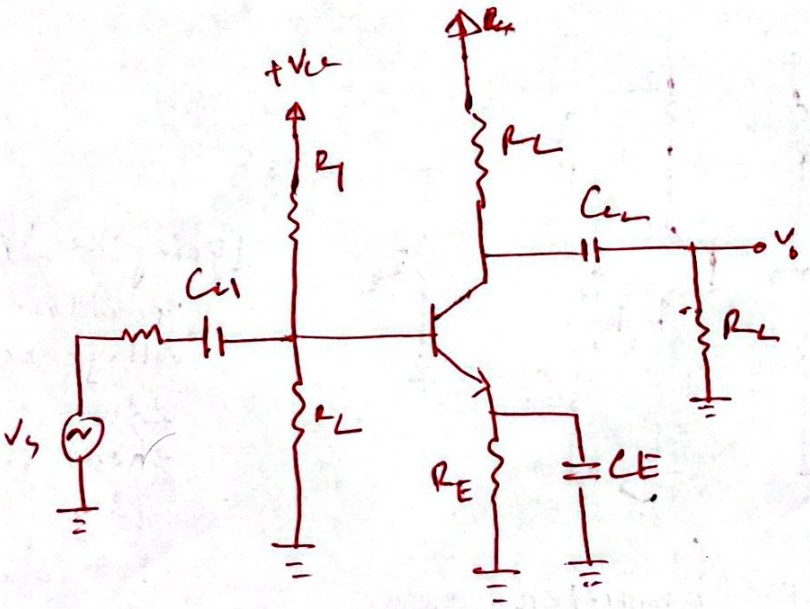

reactance very small << R values.

$X_C = \frac{1}{\omega C}$ very small

⇒ have little effect on the circuit performance, so, can be considered short circuit.

$\omega \uparrow \Rightarrow X_C \downarrow$

$V_{CC} = 0$ ⇒ grounded.

* If. $C_{Ext} \rightarrow \mu F$ (10^{-6} F)

$X_{C_{Ext}} \Rightarrow \frac{1}{\omega C}$

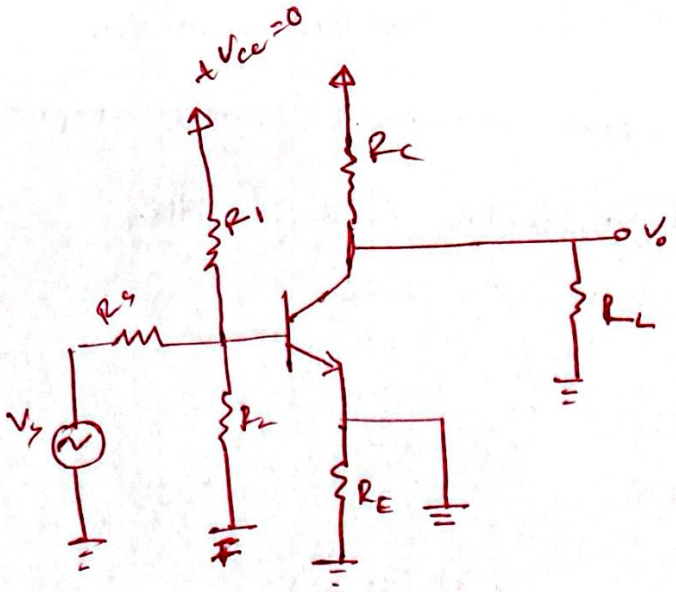

$V_{cc} = 0$ to remove dc voltage, so it makes R_c to be grounded.

$R_E \rightarrow$ Redundant as it is shorted to ground.

⇓

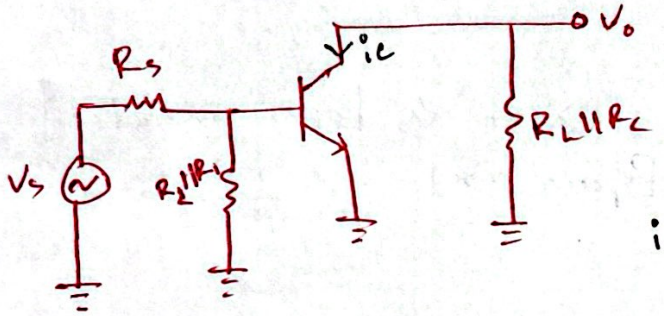

[AC equivalent Circuit]

$i_c = g_m V_{bc}$

⇒ To analyze it, we have to replace transistor with hybrid π or T model as conventional circuit analysis can not be applied for transistor.

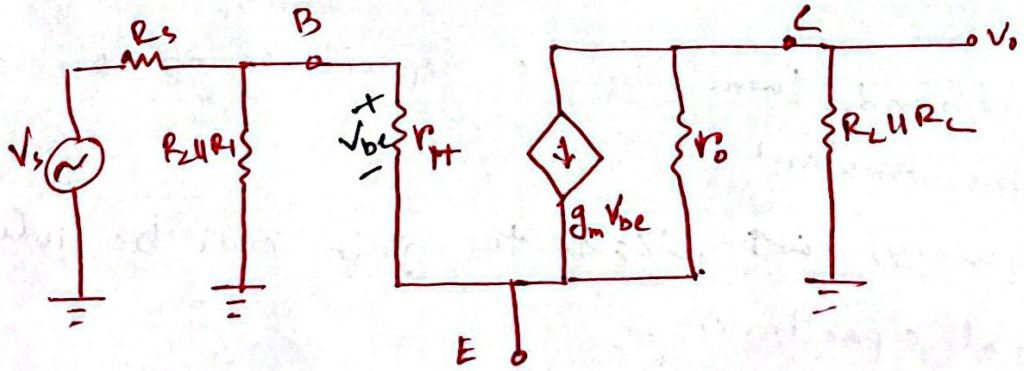

Small Signal Equivalent Circuit.

$r_\pi \rightarrow$ Resistance bet^n base - emitter junction

$g_m V_{be} \rightarrow$ voltage dependent current source representating I_c

$r_o \rightarrow$ Resistance bet^n collector and emitter

for ideal case $r_o \approx \infty$

- If

$C_{EXT} \rightarrow \mu F \ (10^{-6} F)$

$$X_{C_{EXT}} = \frac{1}{\underset{\substack{\downarrow \\ K\,rad/s}}{\omega} C} \Rightarrow \Omega \ll R(K\Omega)$$

Low frequency case: if $\omega / f \rightarrow$ few Hz, $X_C = \frac{1}{\omega C} \rightarrow K\Omega$, then C_{ext} can't be shorted.

if $\omega \downarrow X_C \uparrow$; $\omega = 0$, $X_C = \infty$ [open circuited] [special case]

High frequency case:

$C_{int} \rightarrow pF \ [10^{-12} F]$

$$X_{C_{int}} = \frac{1}{\underset{\substack{\uparrow \\ K\,rad/s}}{\omega} C_{int}} = M\Omega \gg R$$, capacitor open circuited.

- In the midband, there is no capacitive effect, so gain remains constant.
- In high frequency, ~~$\omega \downarrow$~~, ~~$X_C \downarrow$~~ the gain will be reduced by internal capacitance.
- In low frequency region, External capacitance will reduce the gain.

Date: 24/06/25

Recalling from the last class:

① At midband frequency, C_{ext} remains short circuited, so it has ~~les~~ minimal effect on circuits gain and frequency respons..

② At low frequency region. f is small which implies X_c (impedance) would be high. Capacitor resists the current. so kind of open circuit. At $f=0$, ~~it~~ capacitors can be considered fully open circuited.

③ At high frequency, f is high which implies. impedance of external capacitors to be small compared to the circuit resistance. ~~B~~ at So, they can be considered as short circuited. But the internal capacitor, C_{int} has value in pF range which inturn increases the impedance and becomes larger than circuit resistance. So, they affects the gain of the amplifier.

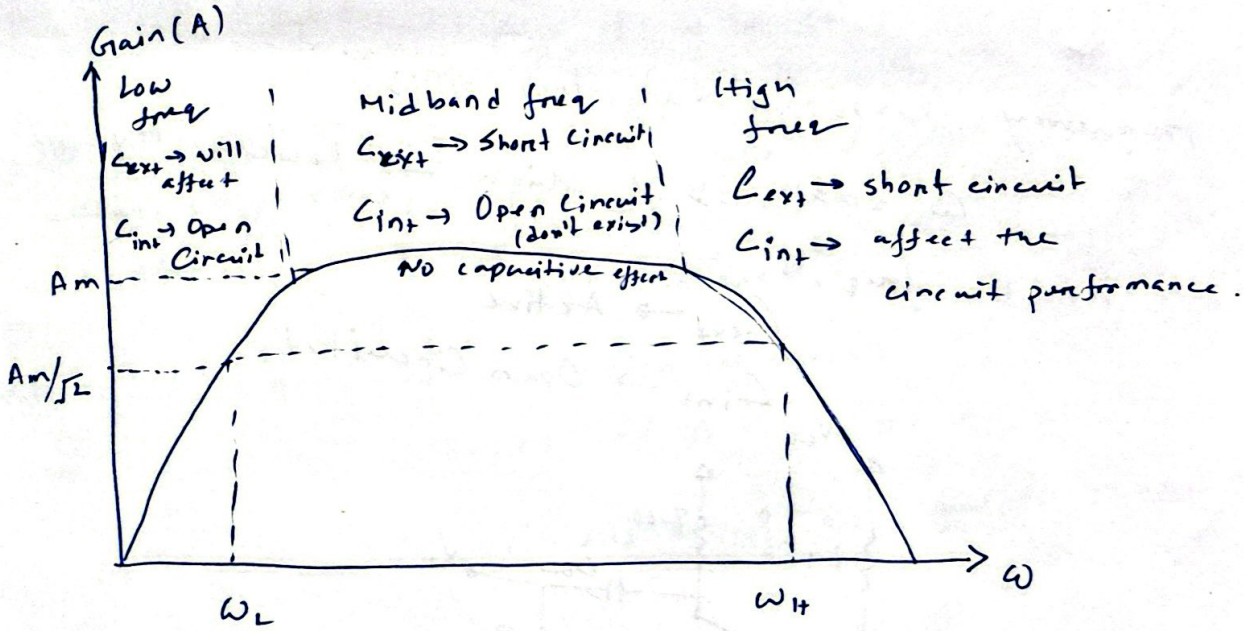

Internal capacitor:

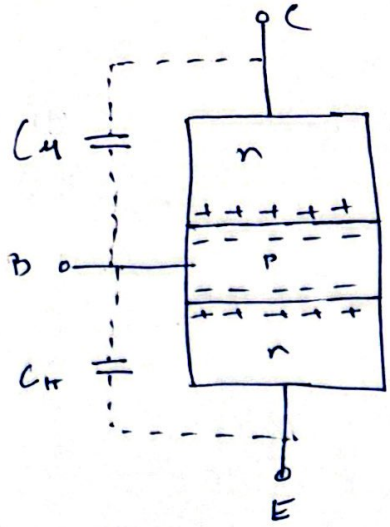

parallel plate capacitor (junction capacitance)

C_{int} value very small

$\therefore X_c = \frac{1}{\omega C}$ will be high for small ω

$\Rightarrow$ if ω is in MHz range, X_c will not be that much high.

$C_\mu, C_\pi \rightarrow$ internal capacitors.

$\Downarrow$

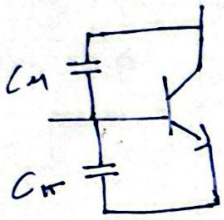

Frequency Response at low freq:

ω small $\Rightarrow X_c$ high $\Rightarrow$ lowers A_v

At low freq,

$C_{ext} \rightarrow$ Active

$C_{int} \rightarrow$ Open Circuited.

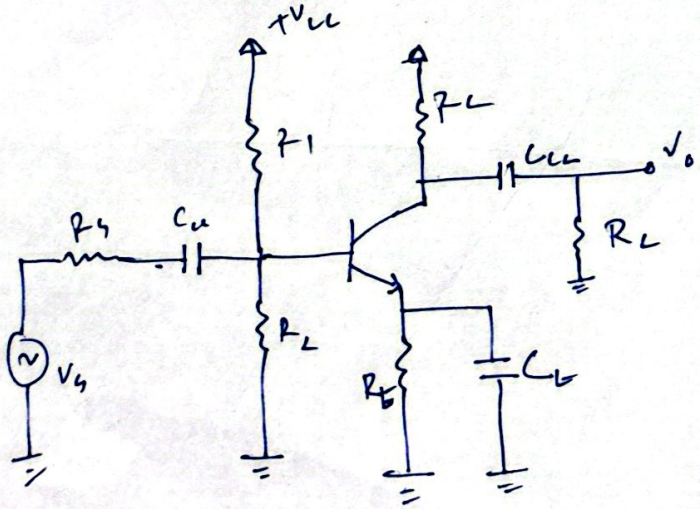

③ ②

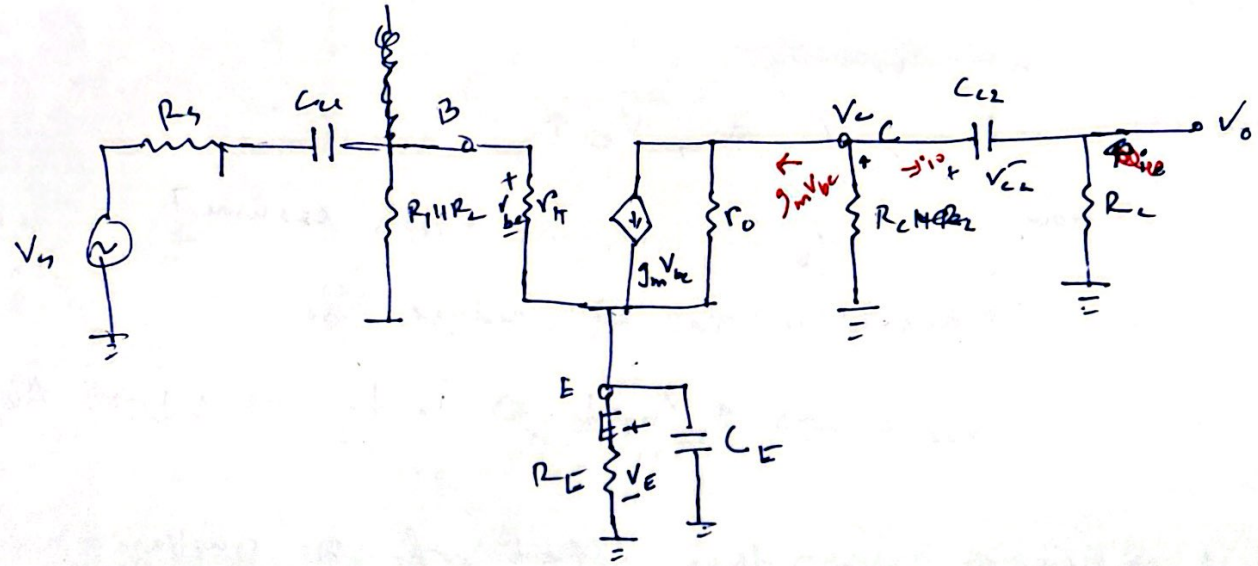

Small Signal eq Circuit for CE Amp at low freq.

Effect
At input side.

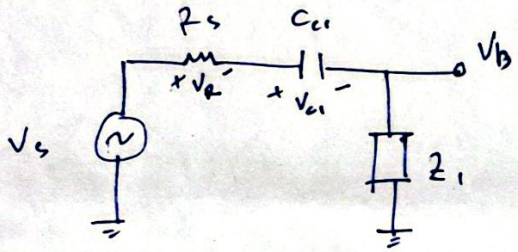

$\therefore V_s = V_R + V_{c1} + V_b$

Now, if ω↓, $X_c = \frac{1}{\omega c}$ ↑ and with increased impedance the voltage drop across the capacitor. V_{c1} will increase.

* Increase in V_{c1} will reduce the voltage drop across resistor. V_R and also V_b.

⇒ Now, if V_b is falling it will also decrease V_{be} and V_E. the other two voltages at B. $V_b \downarrow = \downarrow V_{be} + V_E \downarrow$

⇒ If V_{be} is falling it will reduce $g_m V_{be}$ [collector current]

$$V_o = i_o R_L$$

Now, if i_o decreases as g collector current decreases, V_o will also be reduced.

$$A_o = \frac{V_o}{V_c}$$, so, if $V_o \downarrow$, $A_v \downarrow$

Effect of $C_E \Rightarrow$

$$V_b = V_{be} + V_e$$

~~Now~~, if $\omega \downarrow$, $X_C \uparrow$, $V_e \uparrow$

Now, if V_b is constant [let's assume]

increase in V_e will reduce V_{be}.

$\therefore$ $V_{be} \downarrow \Rightarrow g_m V_{be} \downarrow \Rightarrow i_o \downarrow \Rightarrow V_o \downarrow \Rightarrow A_v \downarrow$

Effect of C_E is more than effect of ~~Cc~~ coupling capacitor C_{c1}. As V_{be} (r_π) is smaller ~~for~~ compared to the V_e.

if V_e increases V_{be} falls very sharply.

Effect of $C_{c_2} \rightarrow$

At collector point C,

Voltage, $V_c = V_{c_2} + V_o$

if, $X_{c_2} \uparrow$ as $\omega \downarrow$.

V_{c_2} will increase reducing V_o. and A_v.

For bypass capacitor, gain falls faster compared to coupling capacitor as, V_E is much higher than V_{be}.

$$\omega_L\big|_{C_E} > \omega_L\big|_{c_1}, \omega_L\big|_{C_B} = ??$$

Only in CE configuration there is the presence of bypass capacitor to make the ac voltage grounded in the emitter junction. For the other two capacitors there is no presence of bypass capacitor and so, the performance (gain) of CE falls more sharply than ~~co~~ other two configuration.
(at higher rate)

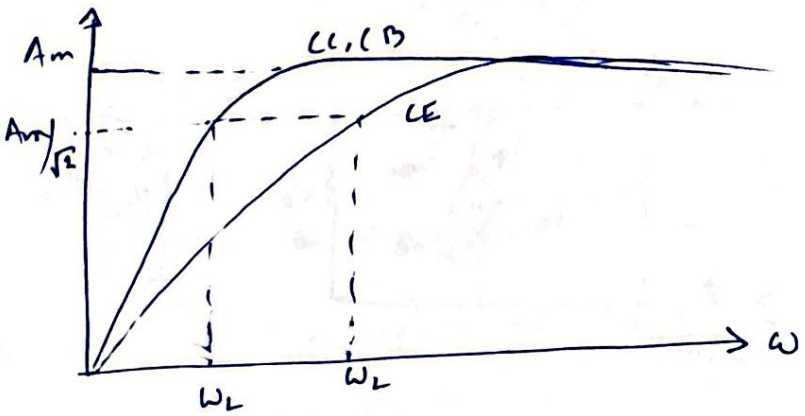

$$\omega_L\Big|_{CE} > \omega_L\Big|_{CC,CB}$$

At. $\omega = 0$, $X_c = \infty$, So, $C_{ext} \rightarrow$ open circuite

$V_o = 0$

$\therefore A_v = 0$

High Freq Analysis:

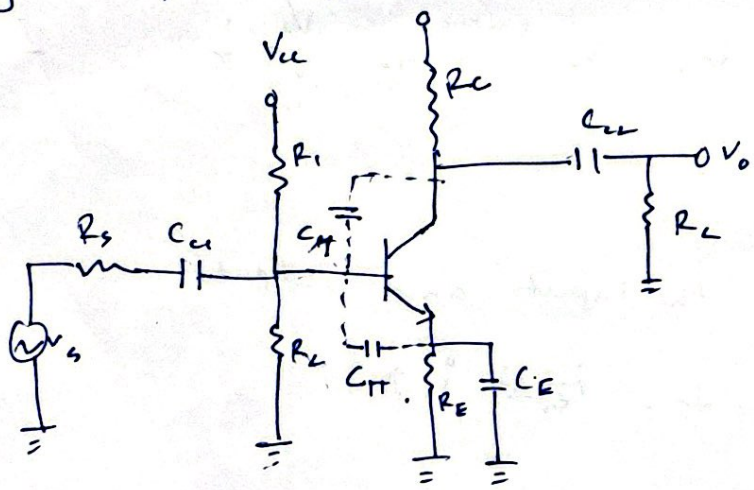

At, $\omega \uparrow$

$C_{ext} \rightarrow X_c$ will be small

So, short circuited

$C_{in} \rightarrow X_c$ will be very high (in range of $K\Omega$)

Jl,

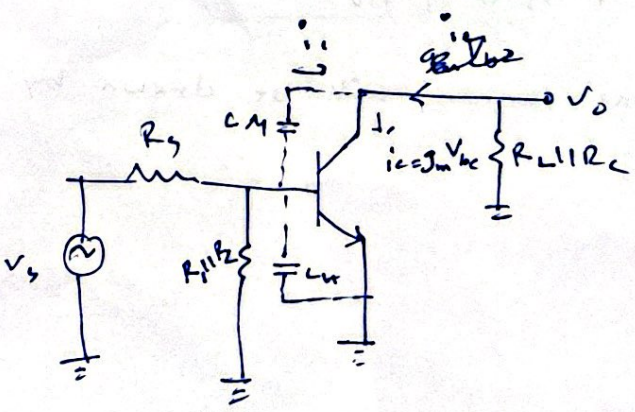

AC eq Circuit At high freq.

[as emitter is grounded]

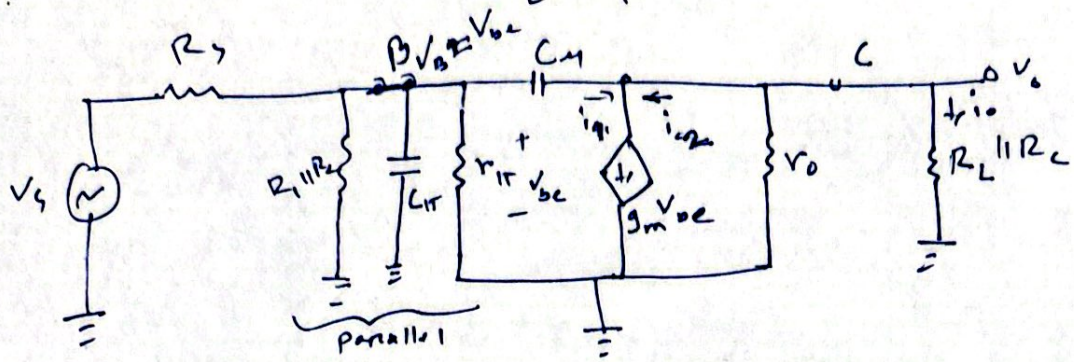

Now, is $\omega\uparrow$, $X_c = \frac{1}{\omega c}\downarrow$

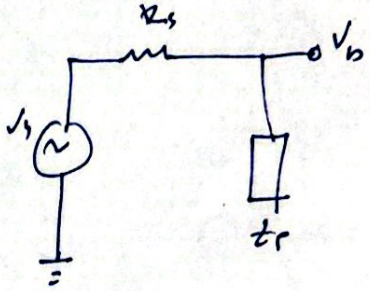

Effect of C_π:

$$V_b = \frac{Z_p}{Z_p + R_s} V_s$$

if $X_c\downarrow$, $Z_p\downarrow$, $V_b\downarrow$, $V_{be}\downarrow$. $g_m V_{be}\downarrow$

$$V_o = -g_m V_{be} (r_o \| R_L \| R_c)$$

if. $g_m V_{be}\downarrow$, $V_o\downarrow$, $A_v = \frac{V_o}{V_s}\downarrow$

Effect of C_μ:

C_μ connecting the input and output.

$\omega\uparrow$, $X_c\downarrow$. $i_1\uparrow$

$$g_m V_{be} = i_1 + i_2$$

If, $i_1\uparrow$, $i_2\downarrow$, $V_o\downarrow$, $A_v\downarrow$

the higher the frequency, more current will be drawn by i_1

(4)

At, extreme case & $\omega = \infty$, $X_C = 0$, C_{in} will be short circuited.

$V_o = 0$

$A_V = 0$

As Effect of C_μ is more in response to C_π.

as, C_μ connects the input and output and takes output current to input side.

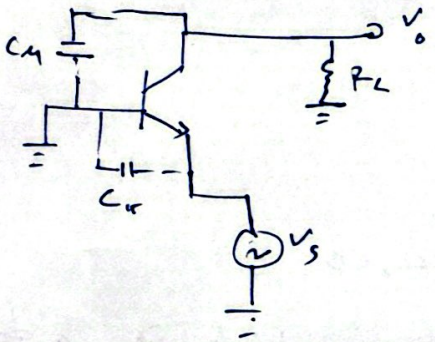

CB

C_μ is not connecting the input and output.

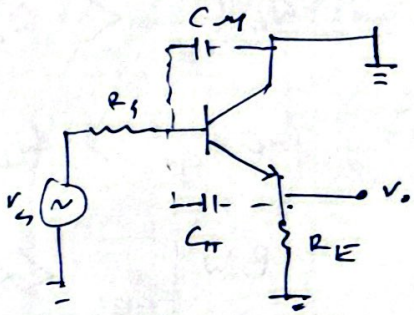

CC

C_μ has nothing to do with the output current.

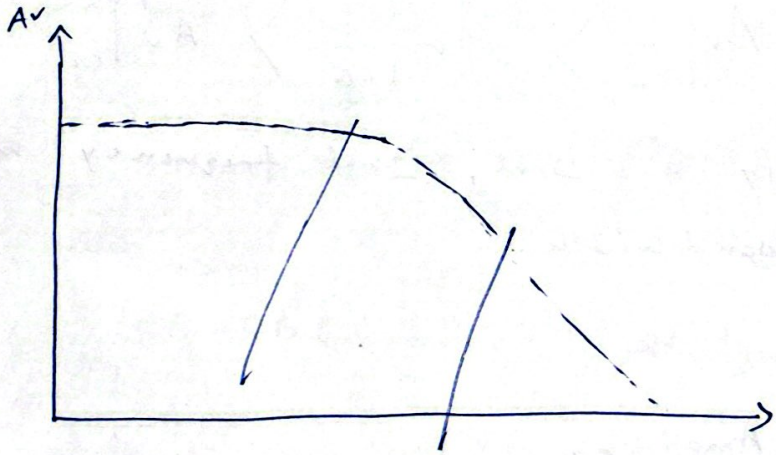

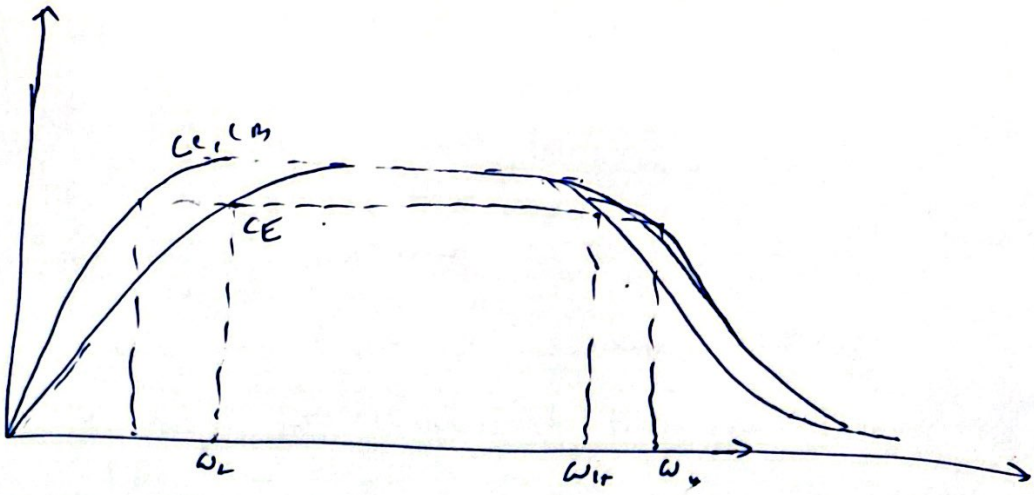

$$\omega_H \Big|_{CE} < \omega_H \Big|_{CC, CB}.$$

$$\omega_L \Big|_{CE} > \omega_L \Big|_{CC, CB}$$

$$BW \Big|_{CE} << BW \Big|_{CC, CB}$$

∴ CE has a narrow bandgap which is a drawback.

But it has the higher voltage gain and power gain.

$$A_v \Big|_{CE} > A_v \Big|_{CB} > A_v \Big|_{CC}$$

To amplify a signal, signal frequency must be within the band width.

Wide bandgap Amplifier

→ Cascade Amplifier (CC + CE)

→ Cascode Amplifier (CE + CB)

(b)

CE - narrow bandwidth
high gain

CC - low gain
wide bandwidth

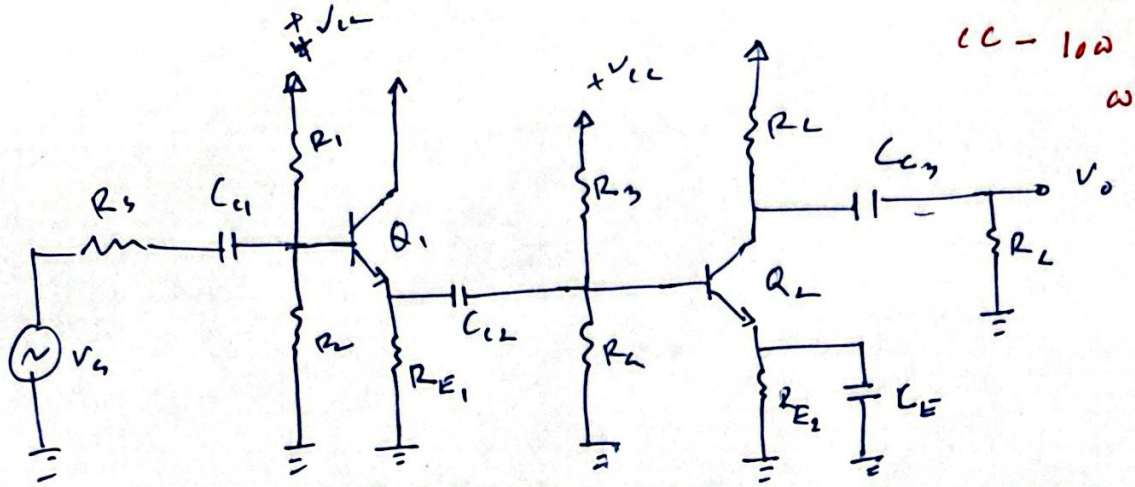

CC - CE cascade wide bandgap amplifier

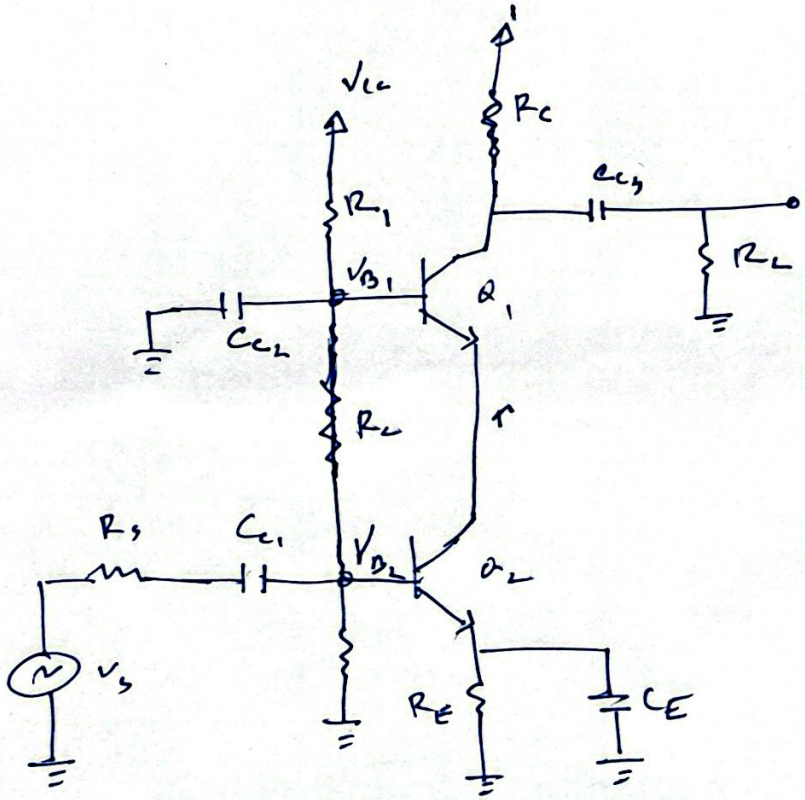

CB - low gain
wide B.W

CE - High gain
narrow B.W

CE - CB Cascode wide bandgap amplifier.