A0 version material code 200402005796

AND
AND

3.2 Rest

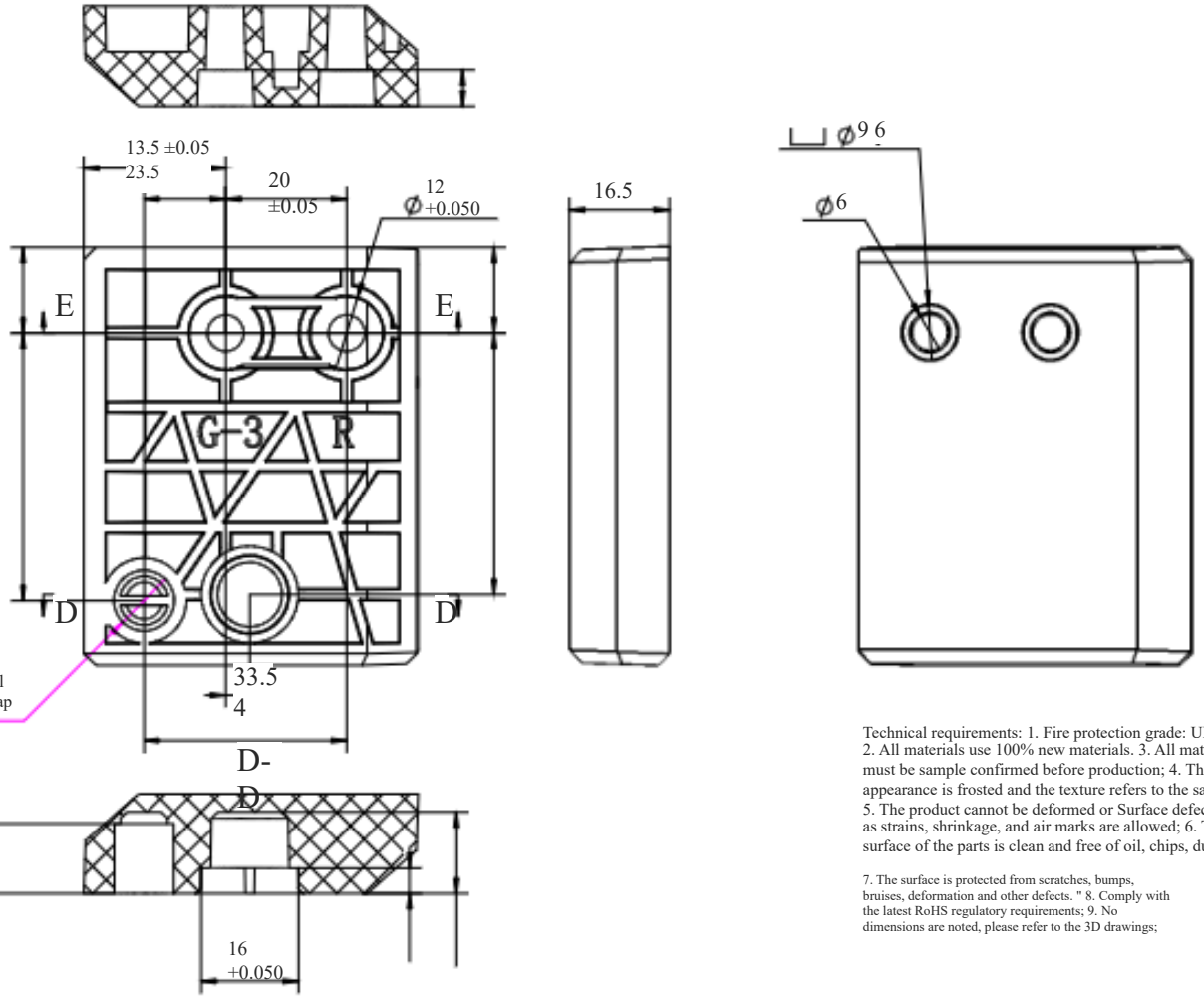

Technical requirements: 1. Fire protection grade: UL94-HB 2. All materials use 100% new materials. 3. All materials must be sample confirmed before production; 4. The appearance is frosted and the texture refers to the sample; " 5. The product cannot be deformed or Surface defects such as strains, shrinkage, and air marks are allowed; 6. The surface of the parts is clean and free of oil, chips, dust, etc.

7. The surface is protected from scratches, bumps, bruises, deformation and other defects. " 8. Comply with the latest RoHS regulatory requirements; 9. No dimensions are noted, please refer to the 3D drawings;

Version mark	Change content	date

Linear tolerances are implemented according to GB/T1804-m level; geometric tolerances are implemented according to GB/T1184-K level.

Limit deviation values for linear basic size segments	> 6 ~ 30	> 30 ~ 120 ~ 400	> 120	> 400 ~ 1000	> 1000 ~ 2000	> 2000 ~ 4000
	±0.2	±0.3	±0.5	±0.8	±1.2	±2

Unspecified tolerance values for straightness and flatness	≤10	> 10 ~ 30	> 30 ~ 100 ~ 300	> 100	> 300 ~ 1000	> 1000 ~ 3000
	0.05	0.1	0.2	0.4	0.6	0.8

design	Wang Enda	2023/2/7	Jie Xinhua Technology Co., Ltd.					Drawing number model material	ABS+PC (black) JXHSV06P
Review									
approve			stage mark		quantity	weight	Proportio		JXHSV06P-02007-d Z-axis right guide rod fixing block
	1 in total	Picture 1			1	0.1	1:1	name	