A0 version material
code 200402100197

3.2 Rest

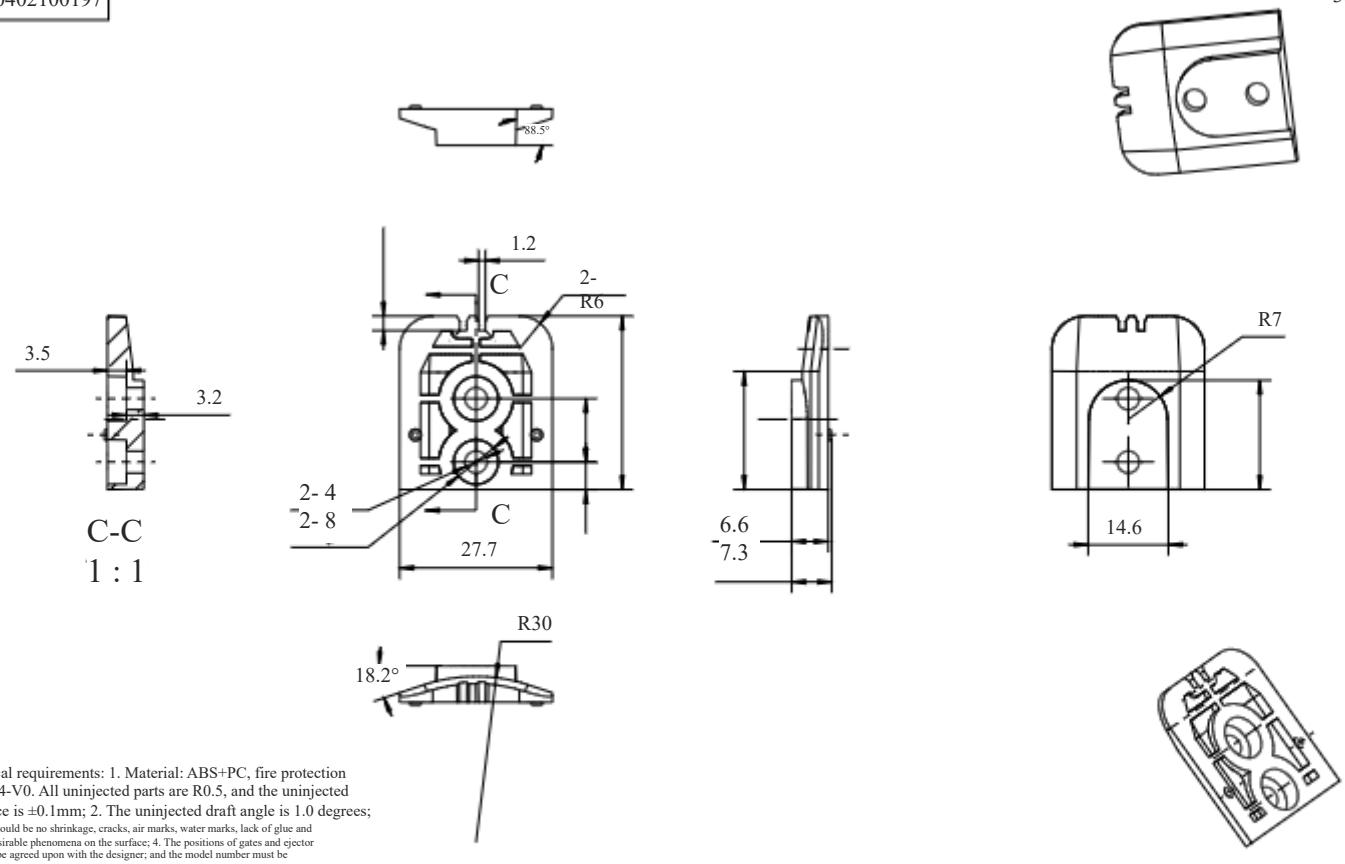

Technical requirements: 1. Material: ABS+PC, fire protection grade 94-V0. All uninjected parts are R0.5, and the uninjected tolerance is ±0.1mm; 2. The uninjected draft angle is 1.0 degrees; 3. There should be no shrinkage, cracks, air marks, water marks, lack of glue and other undesirable phenomena on the surface; 4. The positions of gates and ejector pins must be agreed upon with the designer; and the model number must be marked for differentiation; 5. Ejector pins and gates The traces are lower than the surface of the parts; 6. Parts must comply with ROHS environmental requirements;

Version	mark	Change content	date

Linear tolerances are implemented according to GB/T1804-m level; geometric tolerances are implemented according to GB/T1184-K level.

Limit deviation values for linear basic size segments	> 6 ~ 30	> 30 ~ 120 ~ 400	> 120	> 400 ~ 1000	> 1000 ~ 2000	> 2000 ~ 4000
	±0.2	±0.3	±0.5	±0.8	±1.2	±2

Unspecified tolerance values for straightness and flatness	≤10	> 10 ~ 30	> 30 ~ 100 ~ 300	> 100	> 300 ~ 1000	> 1000 ~ 3000
	0.05	0.1	0.2	0.4	0.6	0.8

design		2024/9/7	Jie Xinhua Technology Co., Ltd.				Drawing number model material	ABS+PC (fire protection grade 94-V0)
Review								MP3A02
approve			stage mark	quantity	weight	Proportio		JXHMP3A02-06003
	1 in total	Picture 1		1		2:1	name	Screen buckle