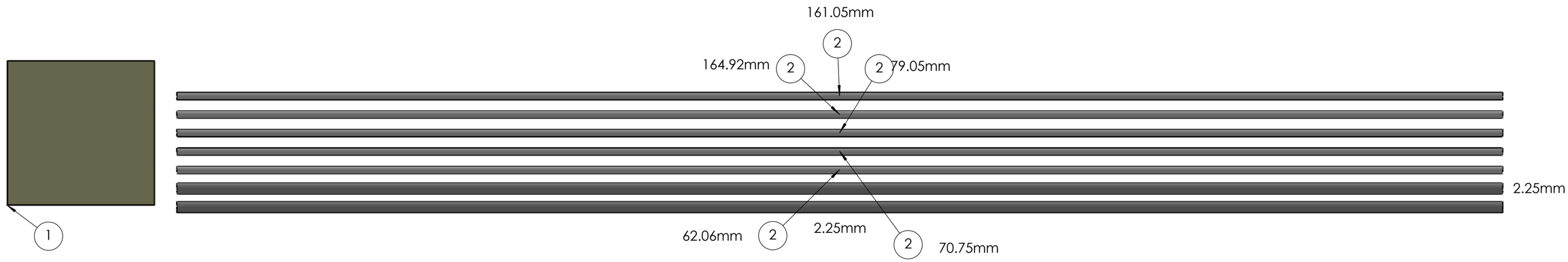

NOT TO SCALE

CIRCUIT SUMMARY							
PART NAME	CONDUCTOR-WIRE ID	COLOR	LENGTH	FROM	From pin	TO	To Pin
PIN 7	PIN 7_1	White	0mm				
	Core2	white	0mm	7_PIN-1	2	9_PIN-1	2
	Core3	white	0mm	7_PIN-1	3	42_PIN-1	1
	Core4	white	0mm	7_PIN-1	2	42_PIN-1	2
	Core5	white	0mm	7_PIN-1	5	14_PIN-1	1
	Core6	white	0mm				
	Core7	white	0mm				
	optic	white	0mm	7_PIN-1	1	9_PIN-1	1

ITEM NO.	PART NUMBER	DESCRIPTION	QTY.	Length
1	7_PIN		1	
2	PIN 7	Optical Fibre	1	0mm

UNLESS OTHERWISE SPECIFIED:
DIMENSIONS ARE IN MILLIMETERS
SURFACE FINISH:
TOLERANCES:
LINEAR:
ANGULAR:

FINISH:

DEBURR AND BREAK SHARP EDGES

DO NOT SCALE DRAWING

REVISION

	NAME	SIGNATURE	DATE
DRAWN			
CHK'D			
APPV'D			
MFG			
Q.A			

TITLE:

MATERIAL:

DWG NO.

Harness_21-CABLE_REALOP_ONE_AS

WEIGHT:

SCALE:1:1

SHEET 1 OF 1

SOLIDWORKS Educational Product. For Instructional Use Only.