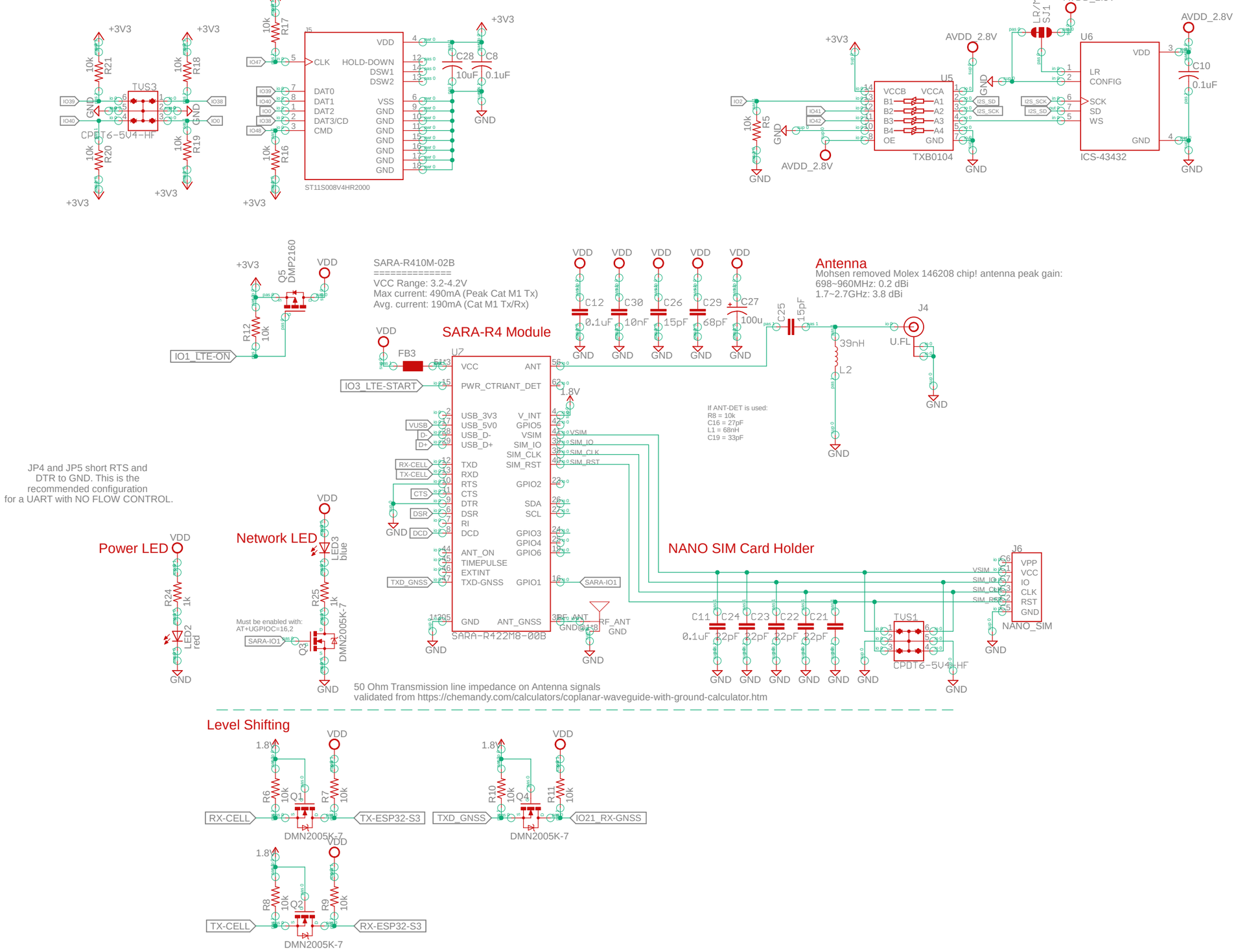
+3V3
R21 10k
R18 10k
R20 10k
R19 10k
TVS3
CPDT6-5V4-HF
GND
IO39
IO40
IO38
IO0
R17 10k
R16 10k
IO47
IO48
J5
CLK
HOLD-DOWN
DSW1
DSW2
DAT0
DAT1
DAT2
DAT3/CD
CMD
VDD
VSS
ST11S008V4HR2000
C28 10uF
C8 0.1uF
AVDD_2.8V
U5
VCCB
VCCA
B1
B2
B3
B4
OE
A1
A2
A3
A4
TXB0104
I2S_SD
I2S_SCK
U6
LR
CONFIG
SCK
SD
WS
ICS-43432
C10 0.1uF
R5 10k
IO2
IO41
IO42
Q5 DMP2160
R12 10k
IO1_LTE-ON
SARA-R410M-02B
==========
VCC Range: 3.2-4.2V
Max current: 490mA (Peak Cat M1 Tx)
Avg. current: 190mA (Cat M1 Tx/Rx)
SARA-R4 Module
U7
FB3
IO3_LTE-START
VCC
PWR_CTRL
ANT
ANT_DET
1.8V
USB_3V3
USB_5V0
USB_D-
USB_D+
V_INT
GPIO5
VSIM
SIM_IO
SIM_CLK
SIM_RST
TXD
RXD
RTS
CTS
DTR
DSR
RI
DCD
GPIO2
SDA
SCL
GPIO3
GPIO4
GPIO6
ANT_ON
TIMEPULSE
EXTINT
TXD-GNSS
GPIO1
GND
ANT_GNSS
SARA-R422M8-00B
VUSB
RX-CELL
TX-CELL
CTS
DSR
DCD
TXD_GNSS
SARA-IO1
RF_ANT
C12 0.1uF
C30 10nF
C26 15pF
C29 68pF
C27 100u
C25 15pF
Antenna
Mohsen removed Molex 146208 chip! antenna peak gain:
698~960MHz: 0.2 dBi
1.7~2.7GHz: 3.8 dBi
J4
U.FL
39nH
L2
If ANT-DET is used:
R8 = 10k
C16 = 27pF
L1 = 68nH
C19 = 33pF
JP4 and JP5 short RTS and
DTR to GND. This is the
recommended configuration
for a UART with NO FLOW CONTROL.
Power LED
R24 1k
LED2 red
Network LED
LED3 blue
R25 1k
Q3 DMN2005K-7
Must be enabled with:
AT+UGPIOC=16,2
NANO SIM Card Holder
J6
VPP
VCC
IO
CLK
RST
GND
NANO_SIM
C11 0.1uF
C24 22pF
C23 22pF
C22 22pF
C21 22pF
TVS1
CPDT6-5V4-HF
50 Ohm Transmission line impedance on Antenna signals
validated from https://chemandy.com/calculators/coplanar-waveguide-with-ground-calculator.htm
Level Shifting
1.8V
R6 10k
Q1
R7 10k
RX-CELL
TX-ESP32-S3
DMN2005K-7
R10 10k
Q4
R11 10k
TXD_GNSS
IO21_RX-GNSS
R8 10k
Q2
R9 10k
TX-CELL
RX-ESP32-S3

Power Regulation
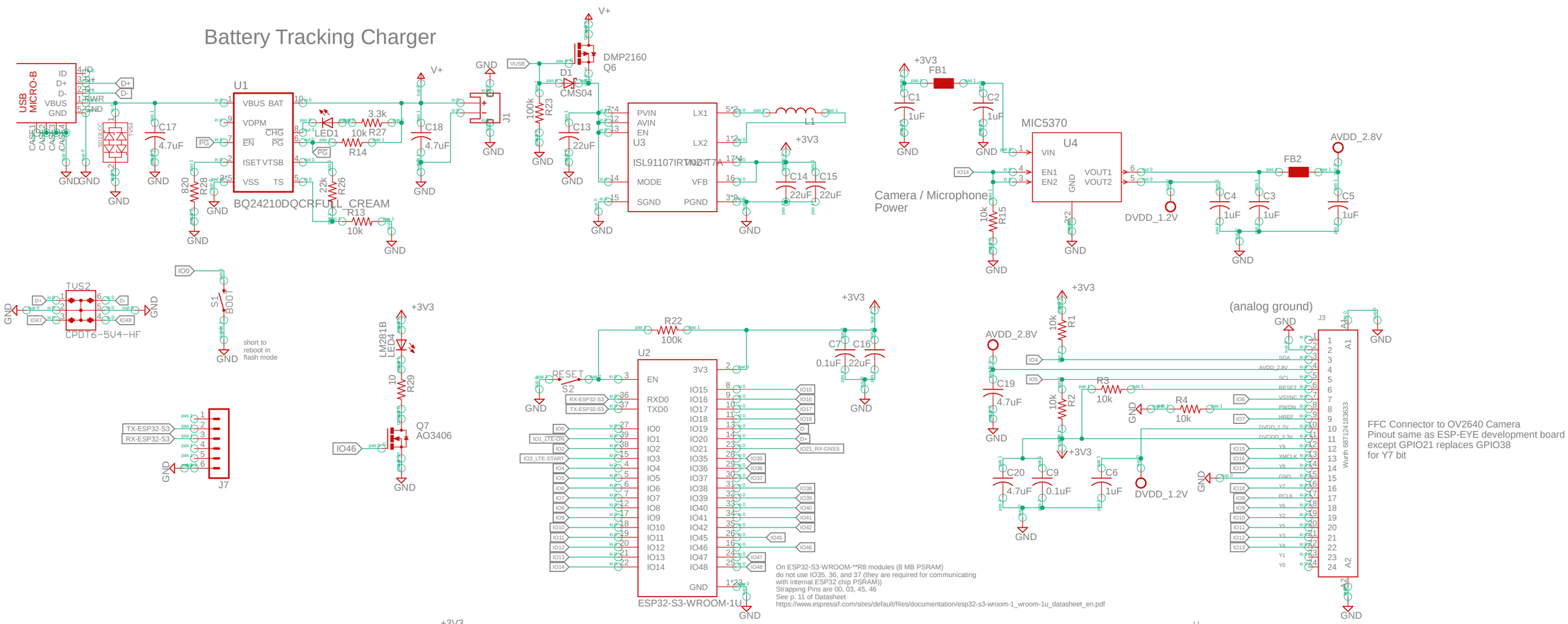
Battery Tracking Charger