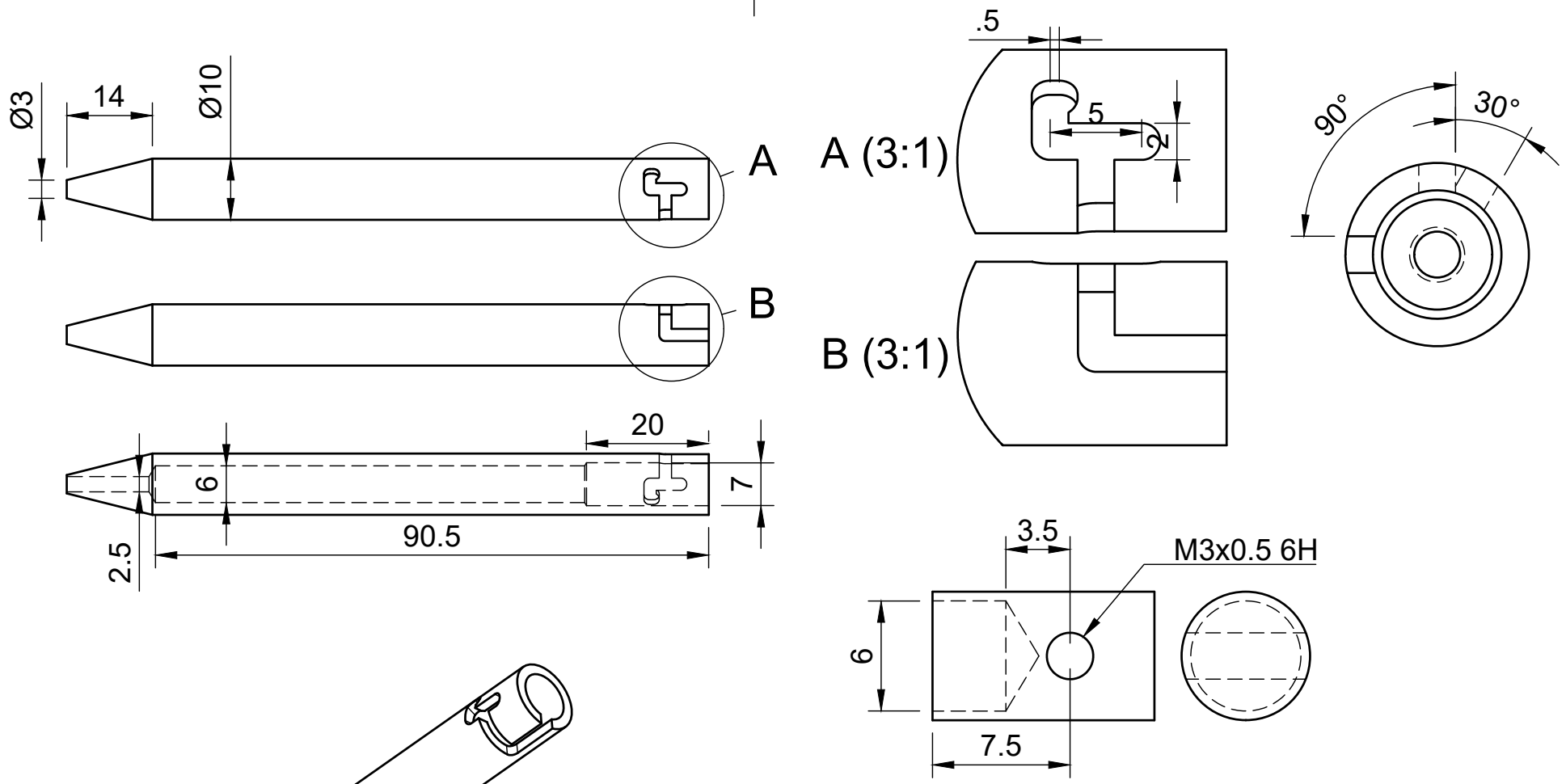

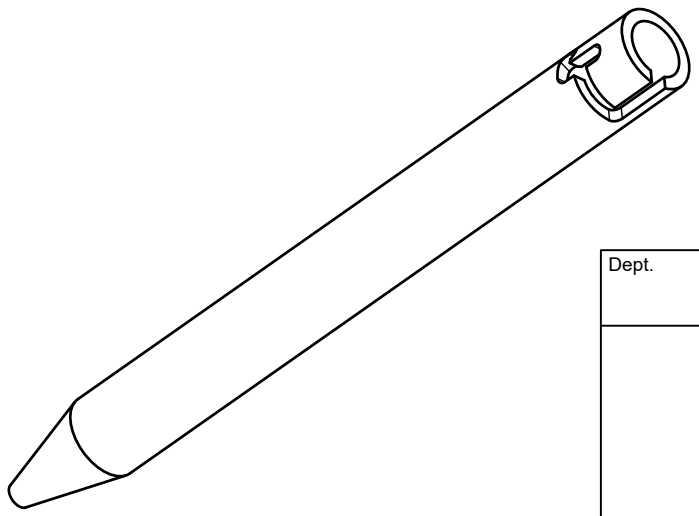

Dept.	Technical reference	Created by Benedict Chua 20/2/2025	Approved by	
		Document type	Document status	
		Title pen goliath cartridge	DWG No.	
			Rev. / Date of issue	Sheet 1/1