RN42

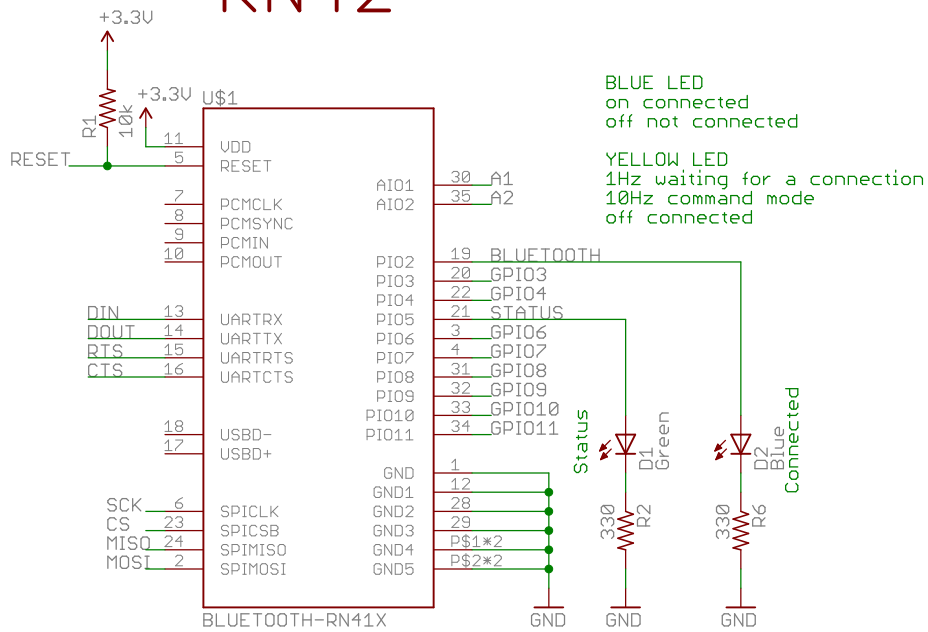

BLUE LED
on connected
off not connected

YELLOW LED
1Hz waiting for a connection
10Hz command mode
off connected

SHIELD

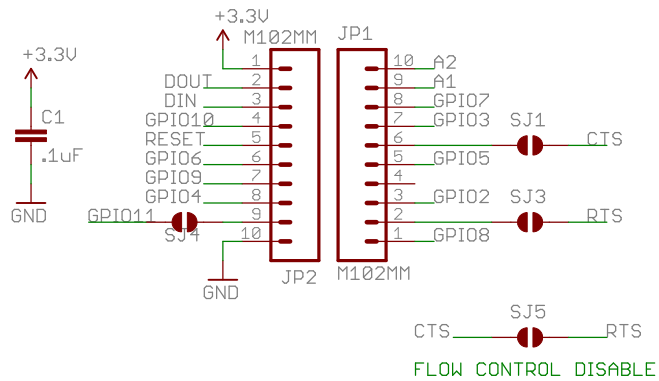

NOTES:

BAUD: (ON = force 9600, LOW = 115K or firmware setting)

CONFIG JUMPERS

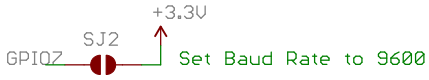

CNC xPRO by Spark Concepts is licensed under
a Creative Commons Attribution-NonCommercial-
ShareAlike 4.0 International License
<http://creativecommons.org/licenses/by-nc-sa/4.0/>

CC-BY-NC-SA
<http://creativecommons.org/licenses/by-nc-sa/4.0/>

BT10
www.spark-concepts.com

REVISION 2
BT10_Rev2
9/14/2014 8:59:26 PM
Sheet: 1/1