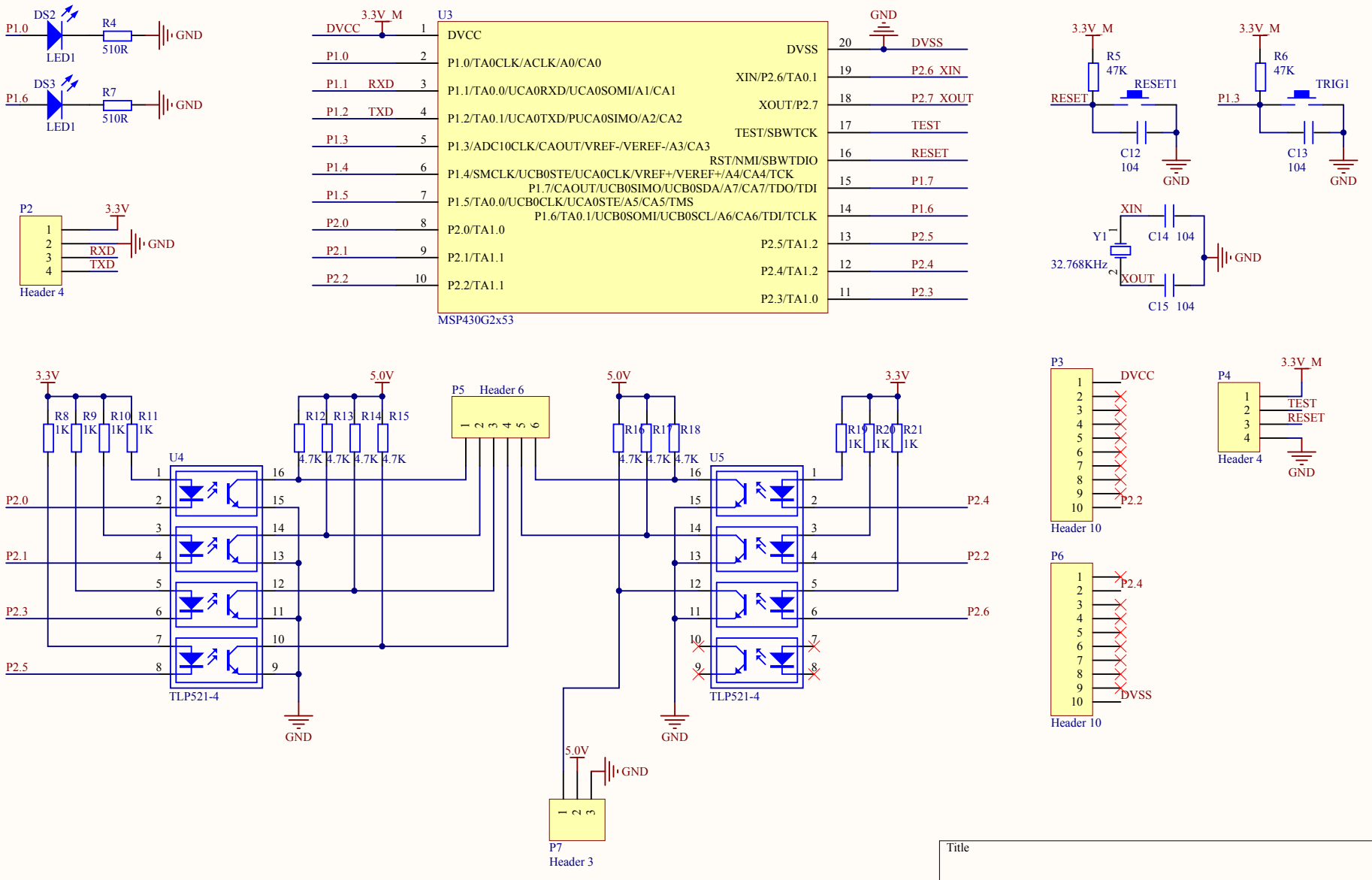
DS2
P1.0
R4
510R
GND
LED1
DS3
P1.6
R7
510R
GND
LED1
P2
3.3V
1
2
3
4
RXD
TXD
GND
Header 4
3.3V_M
U3
DVCC
1
P1.0
2
P1.1
RXD
3
P1.2
TXD
4
P1.3
5
P1.4
6
P1.5
7
P2.0
8
P2.1
9
P2.2
10
DVCC
P1.0/TA0CLK/ACLK/A0/CA0
P1.1/TA0.0/UCA0RXD/UCA0SOMI/A1/CA1
P1.2/TA0.1/UCA0TXD/PUCA0SIMO/A2/CA2
P1.3/ADC10CLK/CAOUT/VREF-/VEREF-/A3/CA3
P1.4/SMCLK/UCB0STE/UCA0CLK/VREF+/VEREF+/A4/CA4/TCK
P1.5/TA0.0/UCB0CLK/UCA0STE/A5/CA5/TMS
P1.6/TA0.1/UCB0SOMI/UCB0SCL/A6/CA6/TDI/TCLK
P2.0/TA1.0
P2.1/TA1.1
P2.2/TA1.1
DVSS
XIN/P2.6/TA0.1
XOUT/P2.7
TEST/SBWTCK
RST/NMI/SBWTDIO
P1.7/CAOUT/UCB0SIMO/UCB0SDA/A7/CA7/TDO/TDI
P2.5/TA1.2
P2.4/TA1.2
P2.3/TA1.0
20
DVSS
19
P2.6_XIN
18
P2.7_XOUT
17
TEST
16
RESET
15
P1.7
14
P1.6
13
P2.5
12
P2.4
11
P2.3
MSP430G2x53
GND
3.3V_M
R5
47K
RESET
RESET1
C12
104
GND
3.3V_M
R6
47K
P1.3
TRIG1
C13
104
GND
XIN
Y1
32.768KHz
C14
104
GND
XOUT
C15
104
3.3V
5.0V
R8
1K
R9
1K
R10
1K
R11
1K
R12
4.7K
R13
4.7K
R14
4.7K
R15
4.7K
P5
Header 6
R16
4.7K
R17
4.7K
R18
4.7K
R19
1K
R20
1K
R21
1K
U4
U5
P2.0
P2.1
P2.3
P2.5
P2.4
P2.2
P2.6
TLP521-4
TLP521-4
GND
GND
5.0V
GND
P7
Header 3
P3
DVCC
P2.2
Header 10
P4
3.3V_M
TEST
RESET
Header 4
GND
P6
P2.4
DVSS
Header 10
Title
Size
A4
Number
Revision
Date:
2016/7/18
Sheet of
File:
C:\Users\..\MainControl.SchDoc
Drawn By:

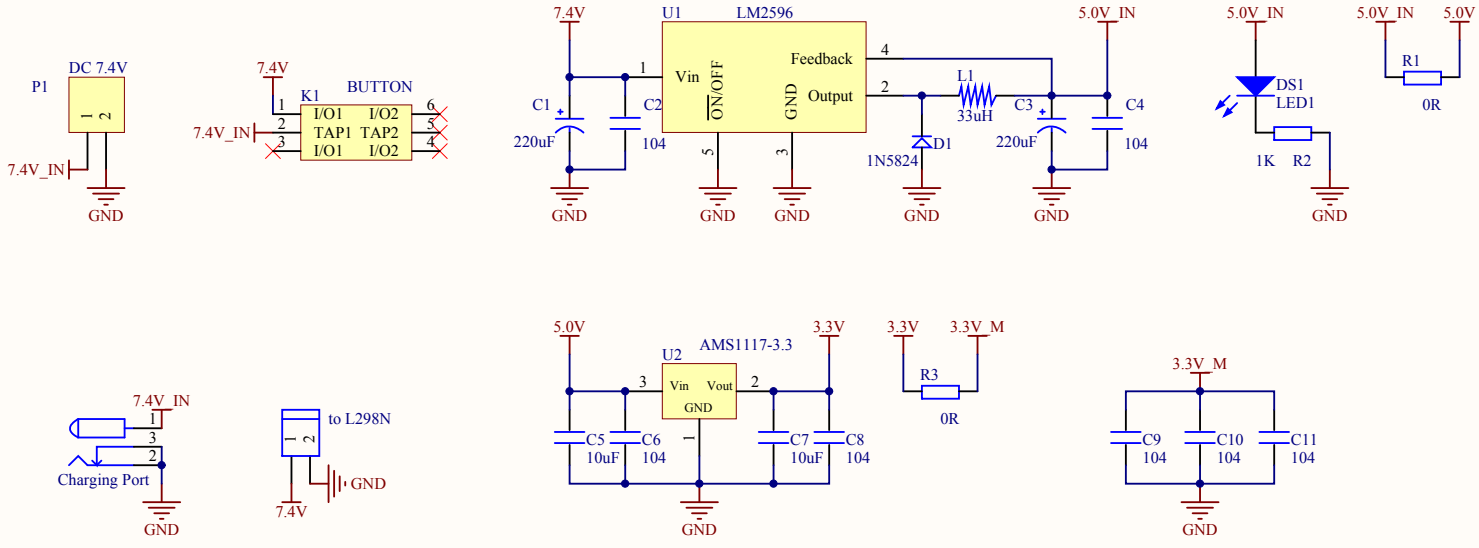

Title		
Size A4	Number	Revision
Date: 2016/7/18		Sheet of
File: C:\Users\..\Power.SchDoc		Drawn By:

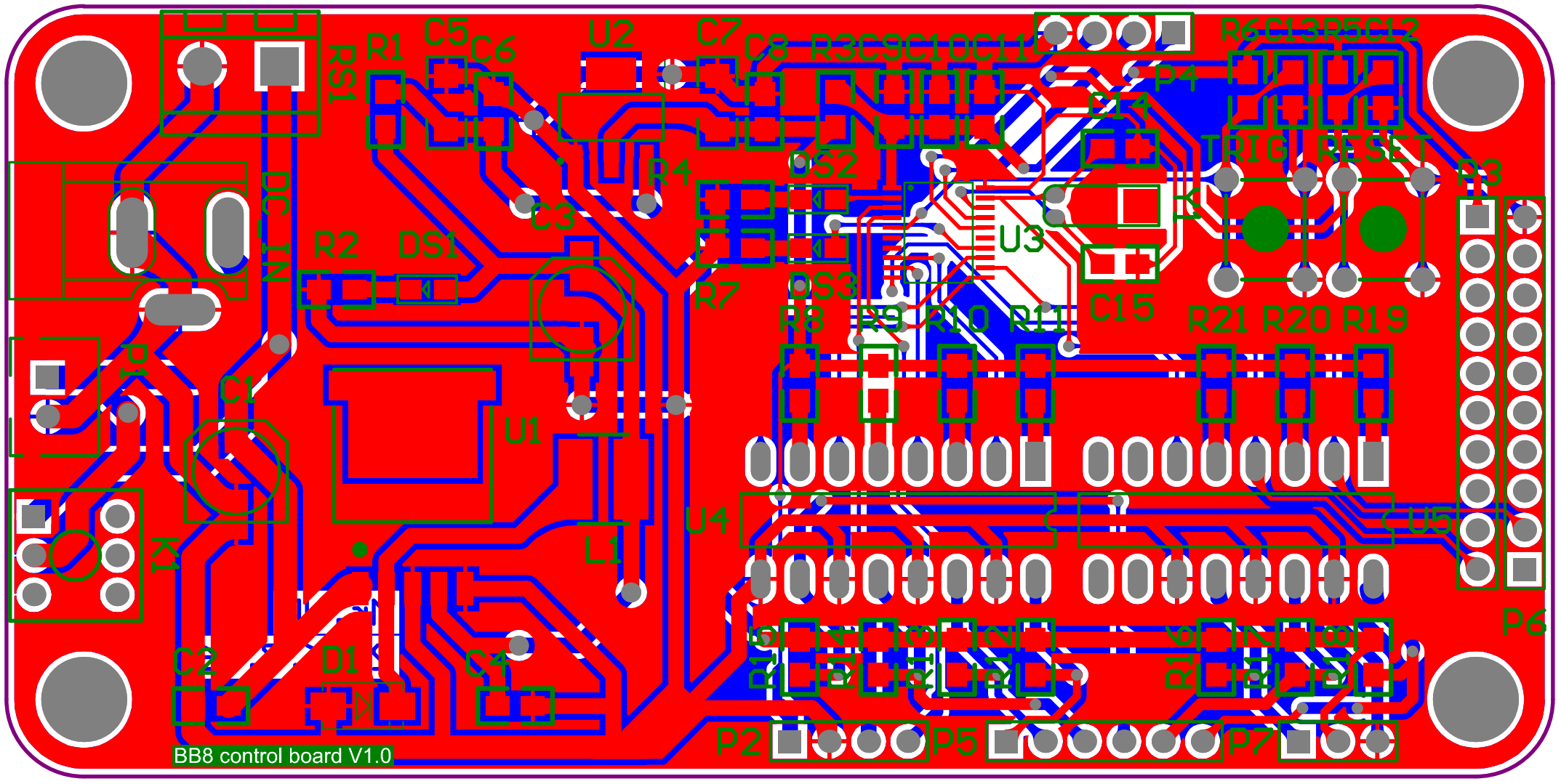

RS1
R1
C5
C6
U2
C7
C8
R3
C9
C10
C11
R6
C13
R5
C12
P4
C4
R4
C3
DS2
TRIG
RESET
P3
R2
DS1
U3
R7
DS3
C15
R8
R9
R10
R11
R21
R20
R19
C1
U1
U4
U5
L1
P6
C2
D1
C4
P2
P5
P7
BB8 control board V1.0

Bill of Materials

<Parameter Title not found>

Source Data From: BB8_Control.PrjPCB

Project: BB8_Control.PrjPCB

Variant: None

Creation Date: 2016/7/18 15:20:54

Print Date: 42569 42569.63968

Footprint	Comment	LibRef	Designator	Description	Quantity
CC6.56.5	220uF	CAP	C1, C3		2
0603P	104	C	C2, C4, C6, C8, C9, C10, C11, C12, C13, C14, C15		11
0603P	10uF	C	C5, C7		2
DIODE_SOP	1N5824	D	D1		1
DC10B	Charging Port	POW	DC_IN1		1
SMDLED	LED1	LE, LED2	DS1, DS2, DS3	Typical RED, GREEN, YELLOW, AMBER GaAs LED	3
BTN8.5*8.5	BUTTON	BUTTON	K1		1
CD54	33uH	L	L1		1
XH2.54-2P	DC 7.4V	Header-2	P1	Header, 2-Pin	1
HDR1X4	Header 4	Header 4	P2, P4	Header, 4-Pin	2
HDR1X10	Header 10	Header 10	P3, P6	Header, 10-Pin	2
HDR1X6	Header 6	Header 6	P5	Header, 6-Pin	1
HDR1X3	Header 3	Header 3	P7	Header, 3-Pin	1
0603P	0R	R	R1, R3		2
0603P	1K	R	R2, R8, R9, R10, R11, R19, R20, R21		8
0603P	510R	R	R4, R7		2
0603P	47K	R	R5, R6		2
0603P	4.7K	R	R12, R13, R14, R15, R16, R17, R18		7
KEY_M	KEY_M	K	RESET1, TRIG1		2
HEAD2L-0.8	to L298N	H	RS1		1
TO-263-5	LM2596	LM2596	U1	LM2596 - 5.0	1
SOT223-4L	AMS1117-3.3	AMS1117	U2	AMS1117-3.3	1
MSP430G2x53	MSP430G2x53	MSP430G2x53	U3	MSP430G2x53 microcontrollers	1
DIP16	TLP521-4	TLP521-4	U4, U5	4 x 4-Pin Phototransistor Optocoupler	2
XTAL32	32.768KHz	XT	Y1	Crystal Oscillator	1
					59

Approved	Notes	