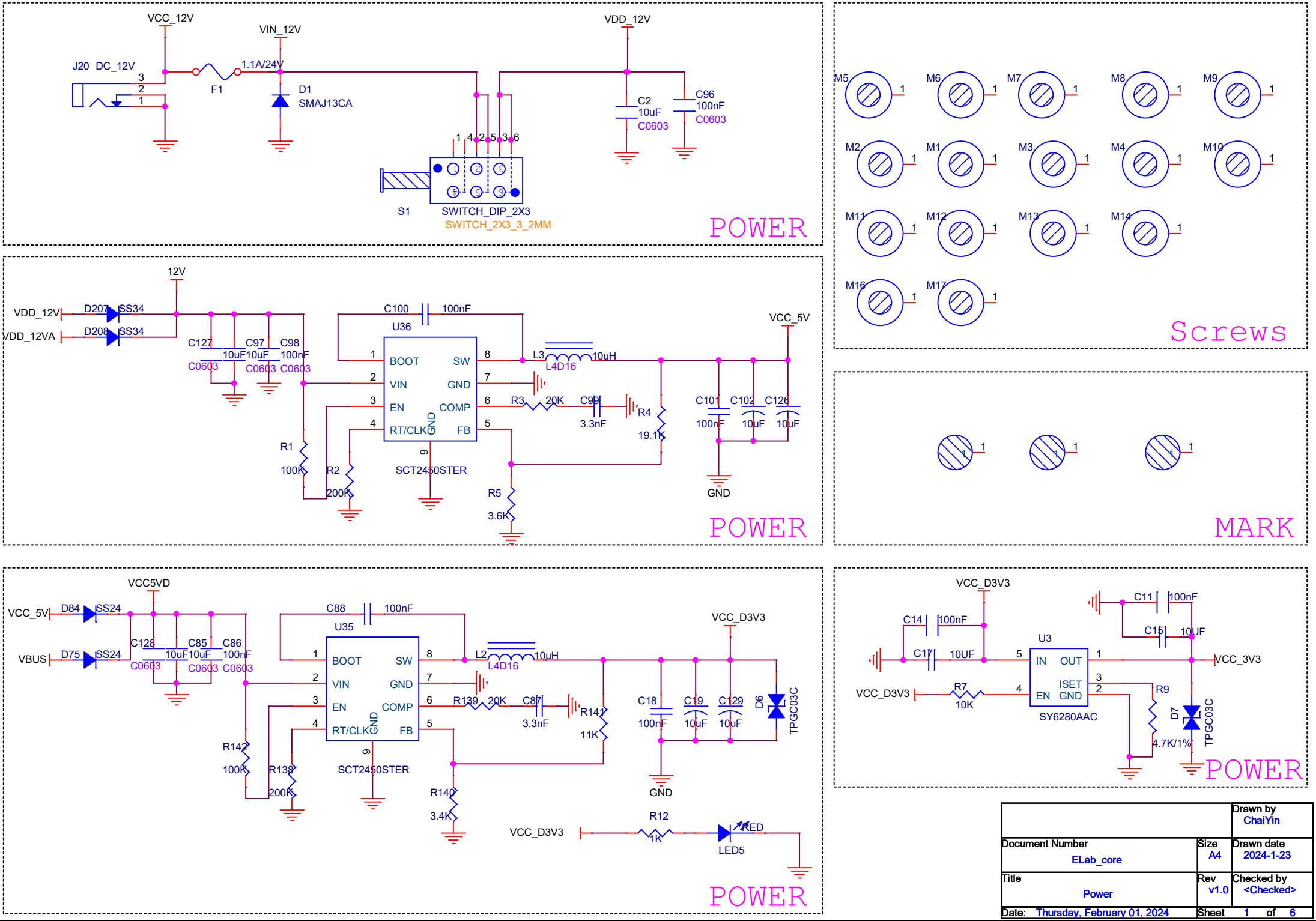

		Drawn by ChaiYin
Document Number ELab_core	Size A4	Drawn date 2024-1-23
Title Power	Rev v1.0	Checked by <Checked>
Date: Thursday, February 01, 2024	Sheet 1 of 6	

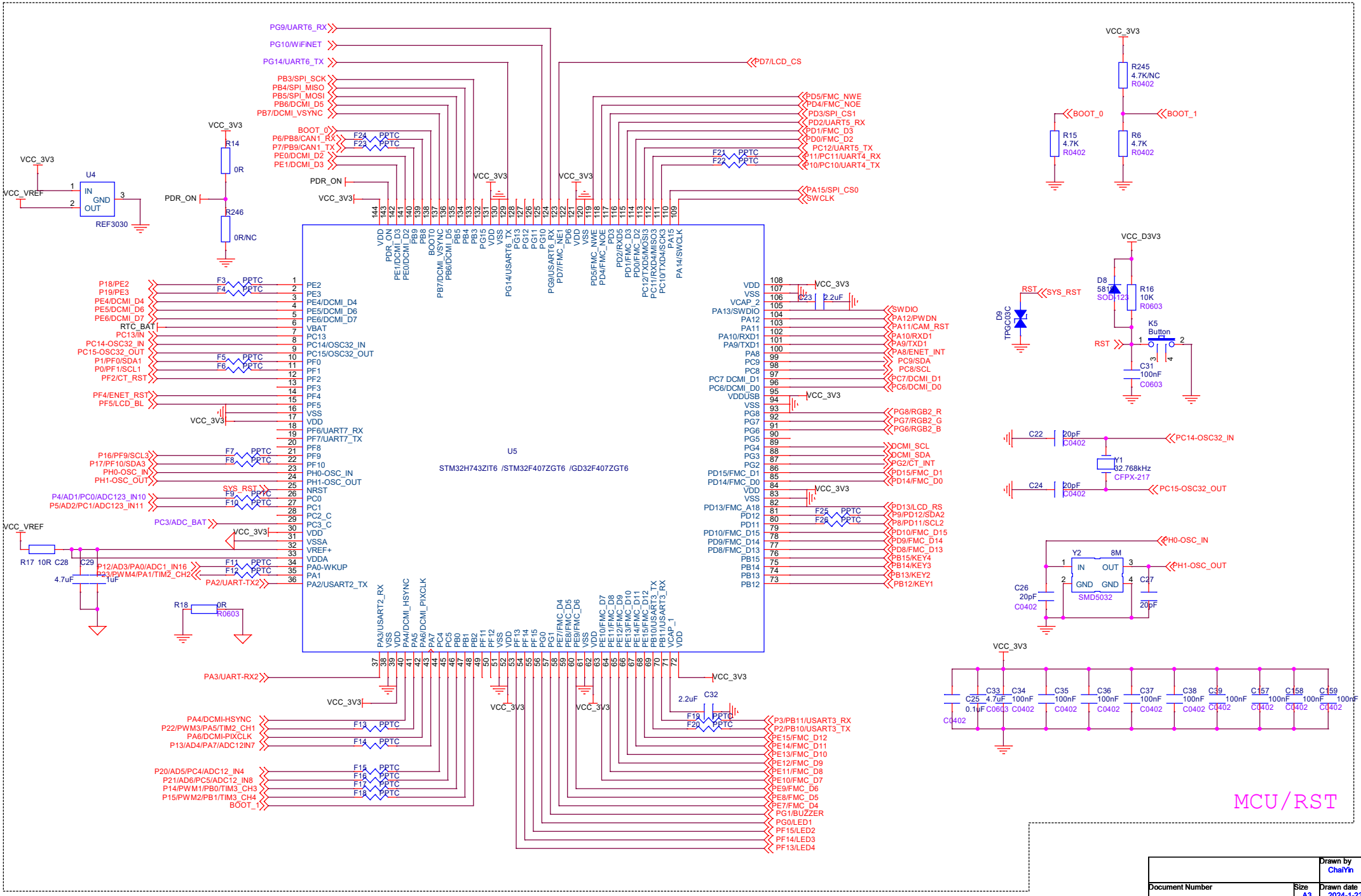

		Drawn by ChalYin
Document Number ELab_core	Size A3	Drawn date 2024-1-23
Title MCU/RST	Rev v1.0	Checked by <Checked>
Date: Thursday, February 01, 2024	Sheet 2 of 6	

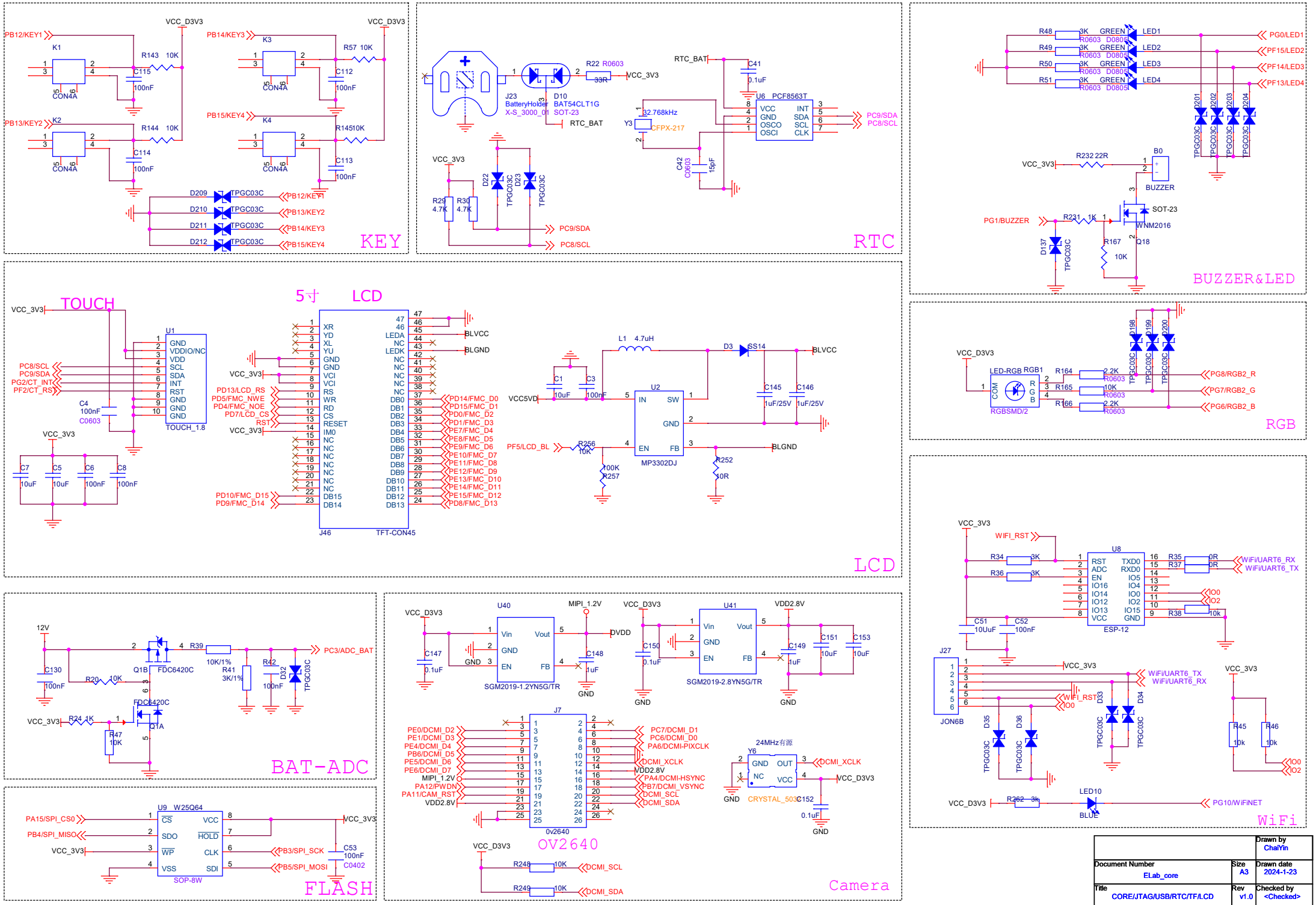

		Drawn by ChaiYin
Document Number ELab_core	Size A3	Drawn date 2024-1-23
Title CORE/JTAG/USB/RTC/TF/LCD	Rev v1.0	Checked by <Checked>
Date: Thursday, February 01, 2024	Sheet 3 of 6	

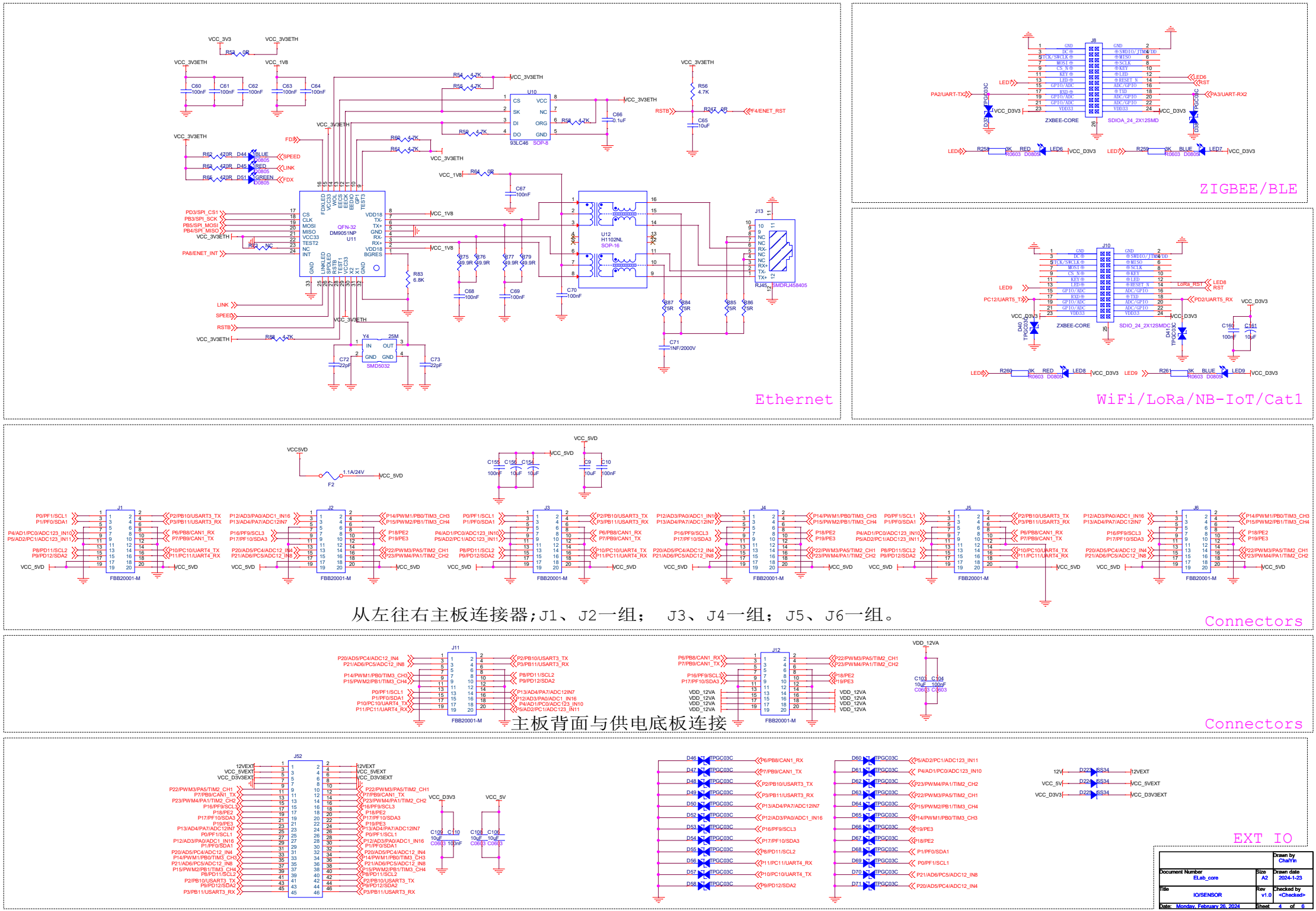
Ethernet
ZIGBEE/BLE
WiFi/LoRa/NB-IoT/Cat1
Connectors
从左往右主板连接器;J1、J2一组； J3、J4一组；J5、J6一组。
Connectors
主板背面与供电底板连接
EXT IO
Drawn by ChaiYin
Document Number ELab_core
Size A2
Drawn date 2024-1-23
Title IO/SENSOR
Rev v1.0
Checked by <Checked>
Date: Monday, February 26, 2024
Sheet 4 of 6

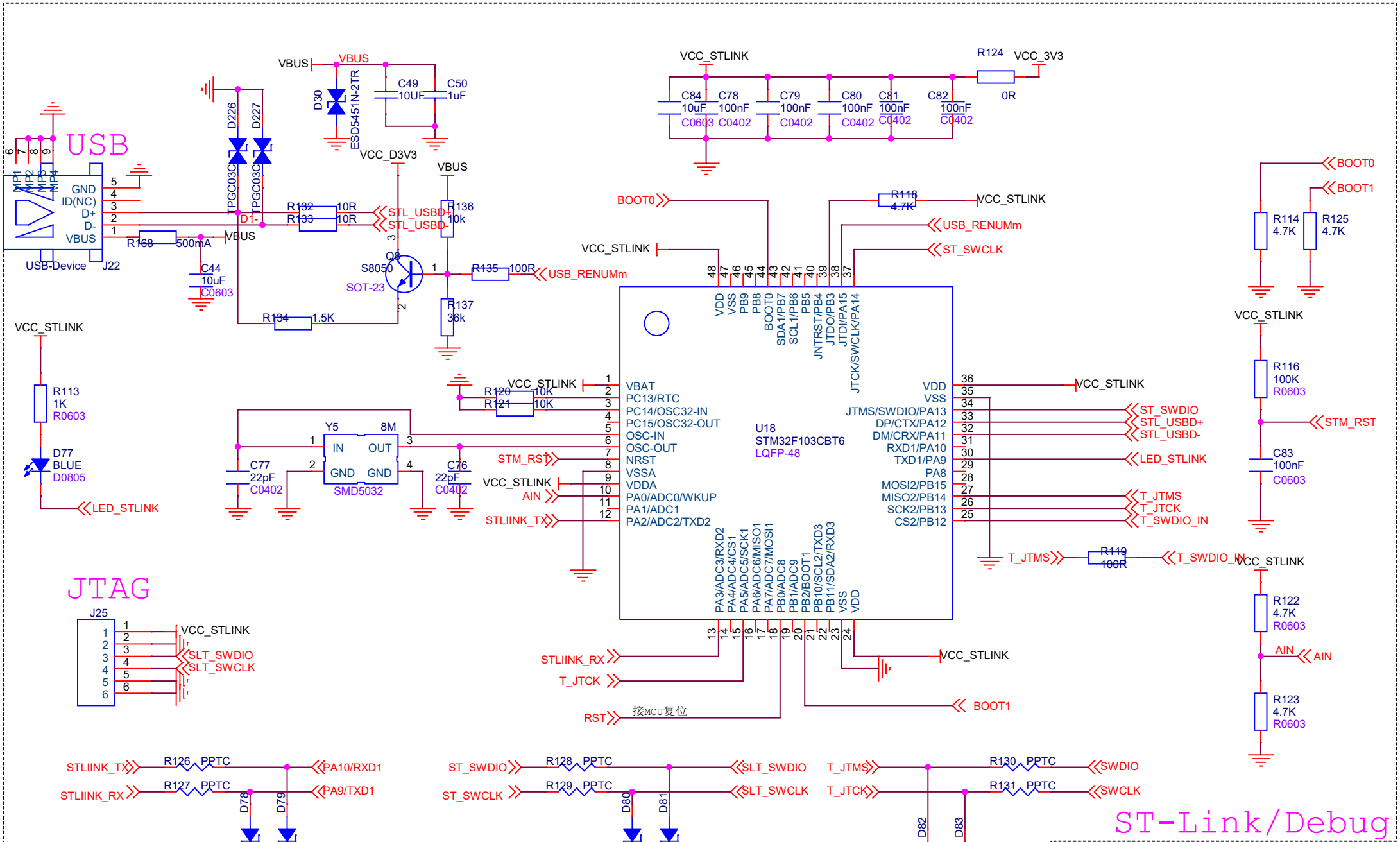
USB
USB-Device
J22
GND
ID(NC)
D+
D-
VBUS
MP1
MP2
MP3
MP4
R168
500mA
C44
10uF
C0603
D226
D227
TPGC03C
D30
ESD5451N-2TR
C49
10UF
C50
1uF
VCC_D3V3
R132
R133
10R
STL_USBD+
STL_USBD-
R136
10k
Q8
S8050
SOT-23
R135
100R
USB_RENUMm
R137
36k
R134
1.5K
VCC_STLINK
R113
1K
R0603
D77
BLUE
D0805
LED_STLINK
C84
10uF
C0603
C78
100nF
C0402
C79
100nF
C0402
C80
100nF
C0402
C81
100nF
C0402
C82
100nF
C0402
R124
0R
VCC_3V3
BOOT0
R118
4.7K
USB_RENUMm
ST_SWCLK
R120
10K
R121
10K
Y5
8M
IN
OUT
GND
GND
SMD5032
C77
22pF
C0402
C76
22pF
C0402
STM_RST
AIN
STLIINK_TX
U18
STM32F103CBT6
LQFP-48
VDD
VSS
PB9
PB8
BOOT0
SDA1/PB7
SCL1/PB6
PB5
JNTRST/PB4
JTDO/PB3
JTDI/PA15
JTCK/SWCLK/PA14
VBAT
PC13/RTC
PC14/OSC32-IN
PC15/OSC32-OUT
OSC-IN
OSC-OUT
NRST
VSSA
VDDA
PA0/ADC0/WKUP
PA1/ADC1
PA2/ADC2/TXD2
JTMS/SWDIO/PA13
DP/CTX/PA12
DM/CRX/PA11
RXD1/PA10
TXD1/PA9
PA8
MOSI2/PB15
MISO2/PB14
SCK2/PB13
CS2/PB12
ST_SWDIO
STL_USBD+
STL_USBD-
LED_STLINK
T_JTMS
T_JTCK
T_SWDIO_IN
R119
100R
PA3/ADC3/RXD2
PA4/ADC4/CS1
PA5/ADC5/SCK1
PA6/ADC6/MISO1
PA7/ADC7/MOSI1
PB0/ADC8
PB1/ADC9
PB2/BOOT1
PB10/SCL2/TXD3
PB11/SDA2/RXD3
STLIINK_RX
T_JTCK
RST
接MCU复位
BOOT1
R114
4.7K
R125
4.7K
R116
100K
R0603
C83
100nF
C0603
R122
4.7K
R0603
R123
4.7K
R0603
JTAG
J25
SLT_SWDIO
SLT_SWCLK
R126
PPTC
R127
PPTC
PA10/RXD1
PA9/TXD1
D78
D79
R128
PPTC
R129
PPTC
SLT_SWDIO
SLT_SWCLK
D80
D81
R130
PPTC
R131
PPTC
SWDIO
SWCLK
D82
D83
ST-Link/Debug
Drawn by
ChaiYin
Document Number
ELab_core
Size
A4
Drawn date
2024-1-23
Title
ST-Link/Debug
Rev
v1.0
Checked by
<Checked>
Date: Thursday, February 01, 2024
Sheet 5 of 6

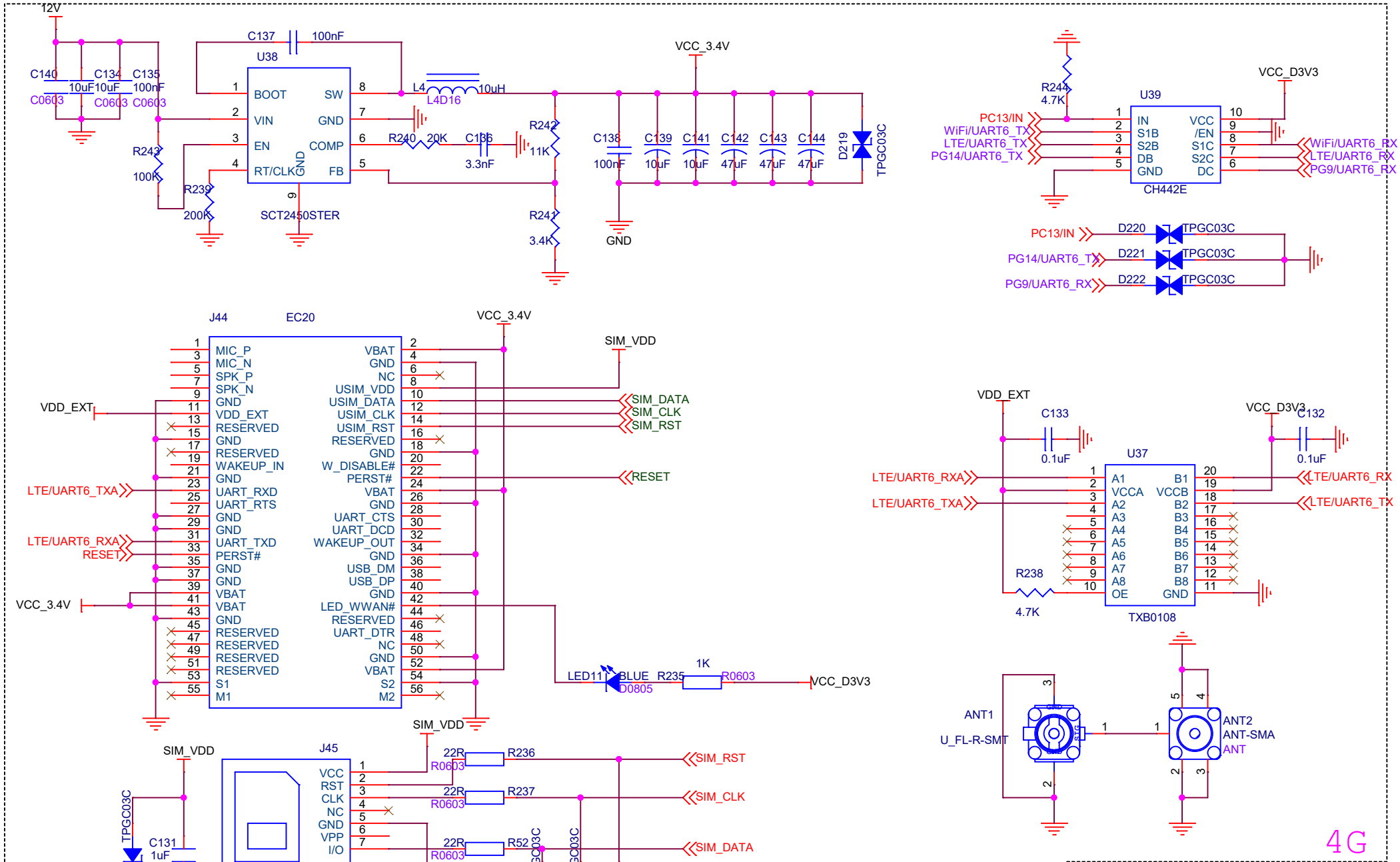

		Drawn by ChaiYin
Document Number ELab_core	Size A4	Drawn date 2024-1-23
Title EC20	Rev v1.0	Checked by <Checked>
Date: Thursday, February 01, 2024	Sheet 6 of 6	