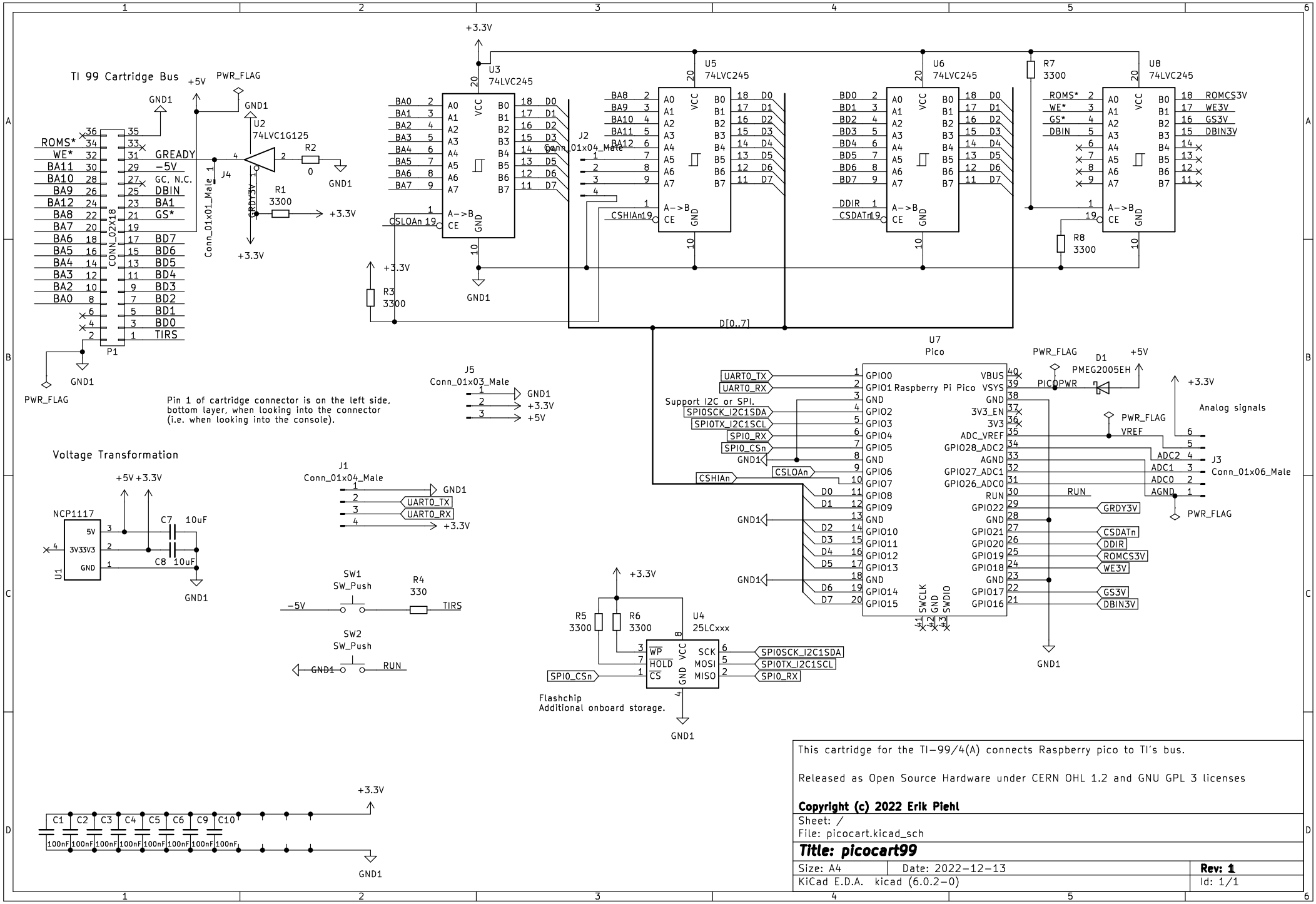

This cartridge for the TI−99/4(A) connects Raspberry pico to TI's bus.

Released as Open Source Hardware under CERN OHL 1.2 and GNU GPL 3 licenses

Copyright (c) 2022 Erik Piehl

Sheet: /
File: picocart.kicad_sch

Title: picocart99

Size: A4	Date: 2022−12−13	**Rev: 1**
KiCad E.D.A. kicad (6.0.2−0)		Id: 1/1