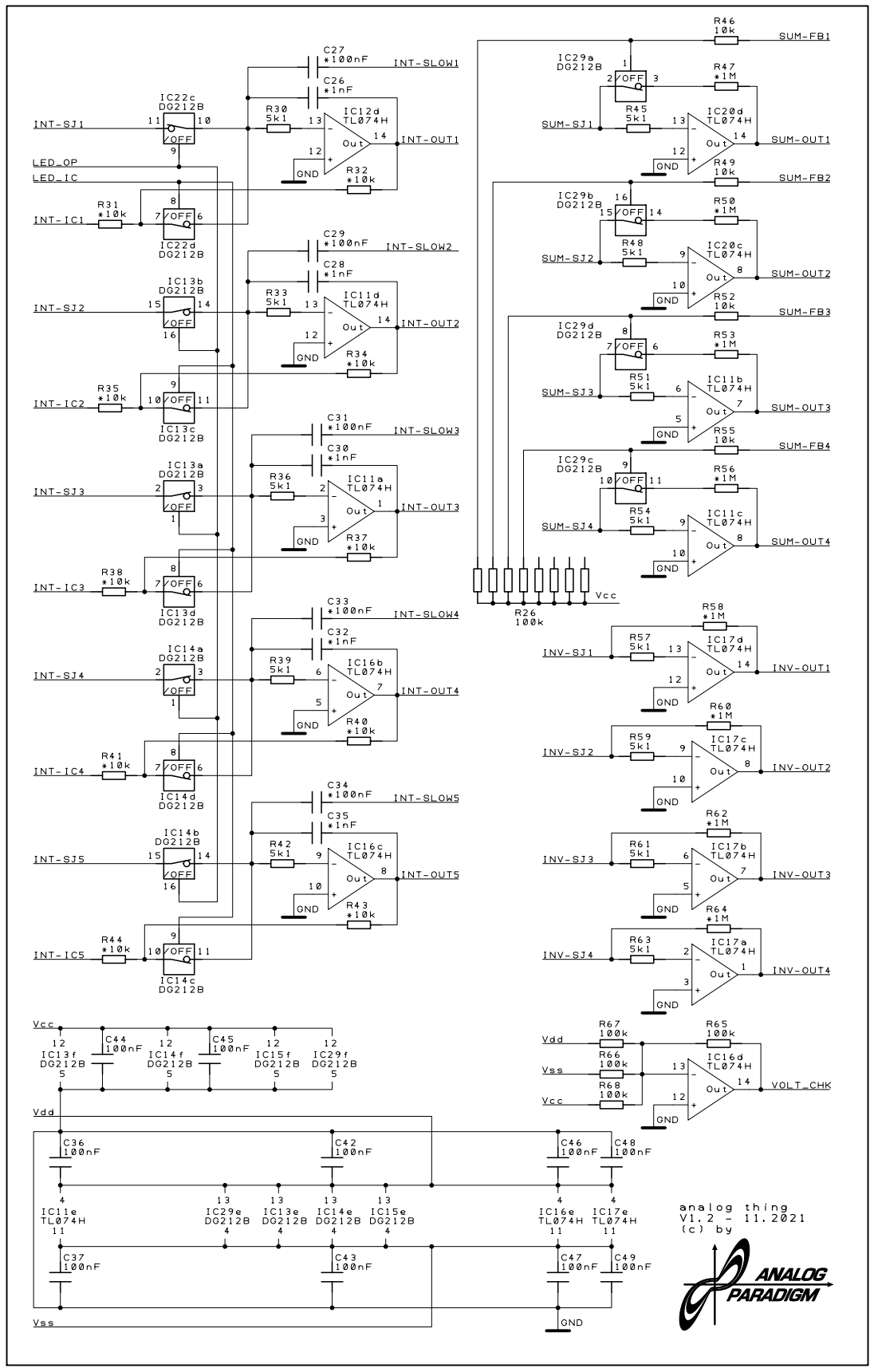
INT-SJ1
INT-IC1
INT-SJ2
INT-IC2
INT-SJ3
INT-IC3
INT-SJ4
INT-IC4
INT-SJ5
INT-IC5
LED_OP
LED_IC
IC22c DG212B
IC22d DG212B
IC13b DG212B
IC13c DG212B
IC13a DG212B
IC13d DG212B
IC14a DG212B
IC14d DG212B
IC14b DG212B
IC14c DG212B
R31 *10k
R35 *10k
R38 *10k
R41 *10k
R44 *10k
C27 *100nF
C26 *1nF
C29 *100nF
C28 *1nF
C31 *100nF
C30 *1nF
C33 *100nF
C32 *1nF
C34 *100nF
C35 *1nF
R30 5k1
R33 5k1
R36 5k1
R39 5k1
R42 5k1
IC12d TL074H
IC11d TL074H
IC11a TL074H
IC16b TL074H
IC16c TL074H
R32 *10k
R34 *10k
R37 *10k
R40 *10k
R43 *10k
INT-SLOW1
INT-SLOW2
INT-SLOW3
INT-SLOW4
INT-SLOW5
INT-OUT1
INT-OUT2
INT-OUT3
INT-OUT4
INT-OUT5
GND
Vcc
Vdd
Vss
C44 100nF
C45 100nF
IC13f DG212B
IC14f DG212B
IC15f DG212B
IC29f DG212B
C36 100nF
C37 100nF
C42 100nF
C43 100nF
C46 100nF
C47 100nF
C48 100nF
C49 100nF
IC11e TL074H
IC29e DG212B
IC13e DG212B
IC14e DG212B
IC15e DG212B
IC16e TL074H
IC17e TL074H
R46 10k
R47 *1M
R45 5k1
R49 10k
R50 *1M
R48 5k1
R52 10k
R53 *1M
R51 5k1
R55 10k
R56 *1M
R54 5k1
R26 100k
IC29a DG212B
IC29b DG212B
IC29d DG212B
IC29c DG212B
SUM-SJ1
SUM-SJ2
SUM-SJ3
SUM-SJ4
SUM-FB1
SUM-FB2
SUM-FB3
SUM-FB4
IC20d TL074H
IC20c TL074H
IC11b TL074H
IC11c TL074H
SUM-OUT1
SUM-OUT2
SUM-OUT3
SUM-OUT4
R58 *1M
R57 5k1
R60 *1M
R59 5k1
R62 *1M
R61 5k1
R64 *1M
R63 5k1
IC17d TL074H
IC17c TL074H
IC17b TL074H
IC17a TL074H
INV-SJ1
INV-SJ2
INV-SJ3
INV-SJ4
INV-OUT1
INV-OUT2
INV-OUT3
INV-OUT4
R67 100k
R66 100k
R68 100k
R65 100k
IC16d TL074H
VOLT_CHK
analog thing
V1.2 - 11.2021
(c) by
ANALOG PARADIGM