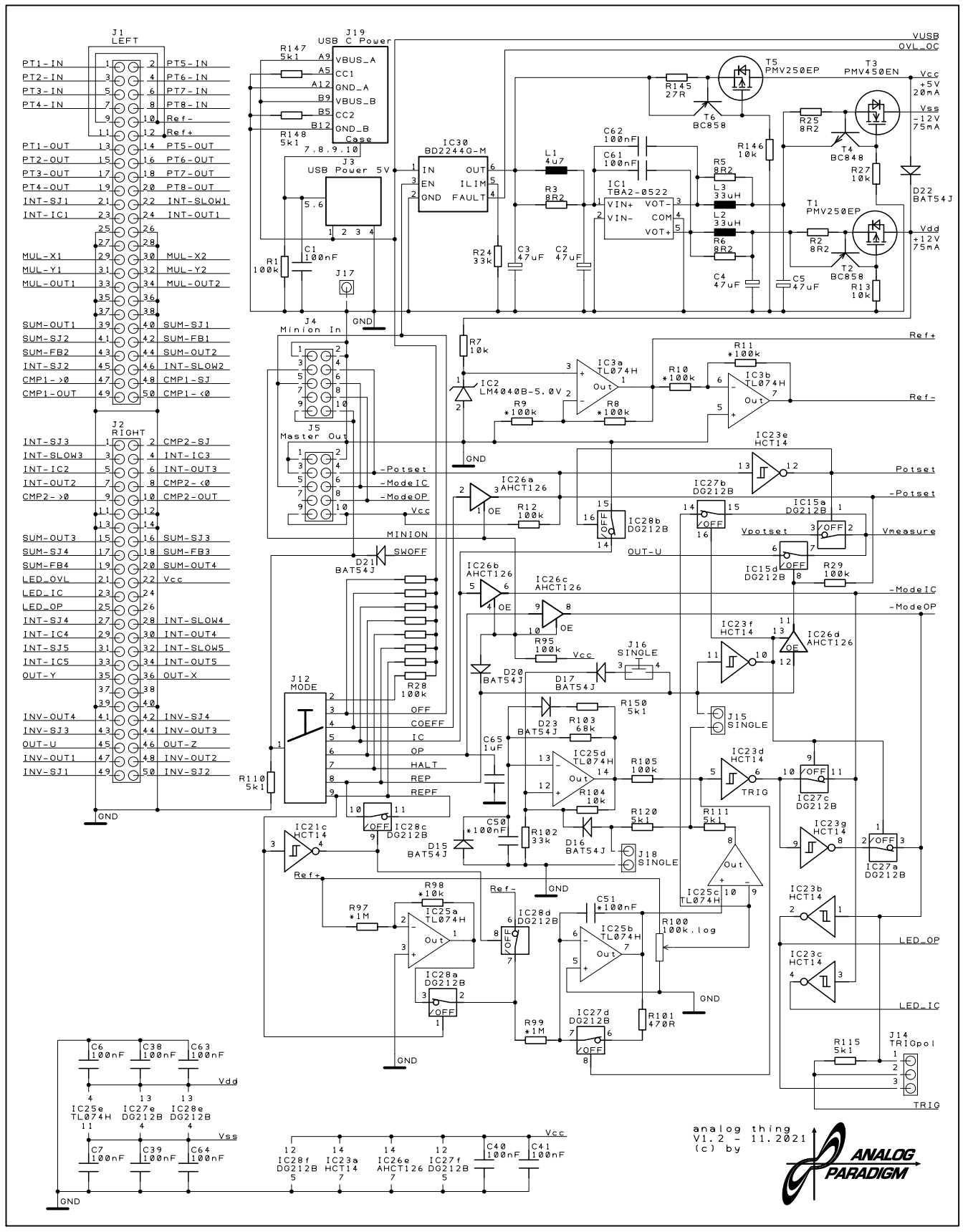
J1 LEFT
PT1-IN
PT2-IN
PT3-IN
PT4-IN
PT5-IN
PT6-IN
PT7-IN
PT8-IN
Ref-
Ref+
PT1-OUT
PT2-OUT
PT3-OUT
PT4-OUT
PT5-OUT
PT6-OUT
PT7-OUT
PT8-OUT
INT-SJ1
INT-IC1
INT-SLOW1
INT-OUT1
MUL-X1
MUL-Y1
MUL-OUT1
MUL-X2
MUL-Y2
MUL-OUT2
SUM-OUT1
SUM-SJ2
SUM-FB2
INT-SJ2
CMP1->0
CMP1-OUT
SUM-SJ1
SUM-FB1
SUM-OUT2
INT-SLOW2
CMP1-SJ
CMP1-<0
J2 RIGHT
INT-SJ3
INT-SLOW3
INT-IC2
INT-OUT2
CMP2->0
CMP2-SJ
INT-IC3
INT-OUT3
CMP2-<0
CMP2-OUT
SUM-OUT3
SUM-SJ4
SUM-FB4
LED_OVL
LED_IC
LED_OP
Vcc
SUM-SJ3
SUM-FB3
SUM-OUT4
INT-SLOW4
INT-OUT4
INT-SLOW5
INT-OUT5
OUT-Y
OUT-X
INV-OUT4
INV-SJ3
OUT-U
INV-OUT1
INV-SJ1
INV-SJ4
INV-OUT3
OUT-Z
INV-OUT2
INV-SJ2
GND
J19 USB C Power
VBUS_A
CC1
GND_A
VBUS_B
CC2
GND_B
Case
R147 5k1
R148 5k1
J3 USB Power 5V
IC30 BD2244G-M
IN
EN
GND
OUT
ILIM
FAULT
VUSB
OVL_OC
T5 PMV250EP
T3 PMV450EN
T6 BC858
T4 BC848
T1 PMV250EP
T2 BC858
Vcc +5V 20mA
Vss -12V 75mA
Vdd +12V 75mA
D22 BAT54J
IC1 TBA2-0522
VIN+
VIN-
VOT-
COM
VOT+
J4 Minion In
J5 Master Out
-Potset
-ModeIC
-ModeOP
Vcc
MINION
SWOFF
D21 BAT54J
IC2 LM4040B-5.0V
IC3a TL074H
IC3b TL074H
IC23e HCT14
IC26a AHCT126
IC26b AHCT126
IC26c AHCT126
IC26d AHCT126
IC27b DG212B
IC15a DG212B
IC15d DG212B
IC28b DG212B
Vpotset
Vmeasure
OUT-U
J16 SINGLE
J15 SINGLE
J18 SINGLE
D17 BAT54J
D20 BAT54J
D23 BAT54J
D16 BAT54J
D15 BAT54J
J12 MODE
OFF
COEFF
IC
OP
HALT
REP
REPF
IC28c DG212B
IC21c HCT14
IC25d TL074H
IC23f HCT14
IC23d HCT14
IC27c DG212B
IC23g HCT14
IC27a DG212B
IC25c TL074H
IC23b HCT14
IC23c HCT14
LED_OP
LED_IC
J14 TRIGpol
TRIG
IC25a TL074H
IC28d DG212B
IC28a DG212B
IC25b TL074H
IC27d DG212B
R100 100k.log
R101 470R
R99 *1M
R97 *1M
R98 *10k
C51 *100nF
C50 *100nF
R102 33k
R104 10k
R105 100k
R120 5k1
R111 5k1
R150 5k1
R103 68k
R95 100k
R28 100k
R110 5k1
C65 1uF
R12 100k
R29 100k
R115 5k1
R7 10k
R8 *100k
R9 *100k
R10 *100k
R11 *100k
R145 27R
R146 10k
R25 8R2
R27 10k
R2 8R2
R13 10k
R5 8R2
R6 8R2
L3 33uH
L2 33uH
L1 4u7
R3 8R2
R24 33k
C62 100nF
C61 100nF
C3 47uF
C2 47uF
C4 47uF
C5 47uF
R1 100k
C1 100nF
J17
C6 100nF
C38 100nF
C63 100nF
C7 100nF
C39 100nF
C64 100nF
C40 100nF
C41 100nF
IC25e TL074H
IC27e DG212B
IC28e DG212B
IC28f DG212B
IC23a HCT14
IC26e AHCT126
IC27f DG212B
analog thing
V1.2 - 11.2021
(c) by
ANALOG PARADIGM