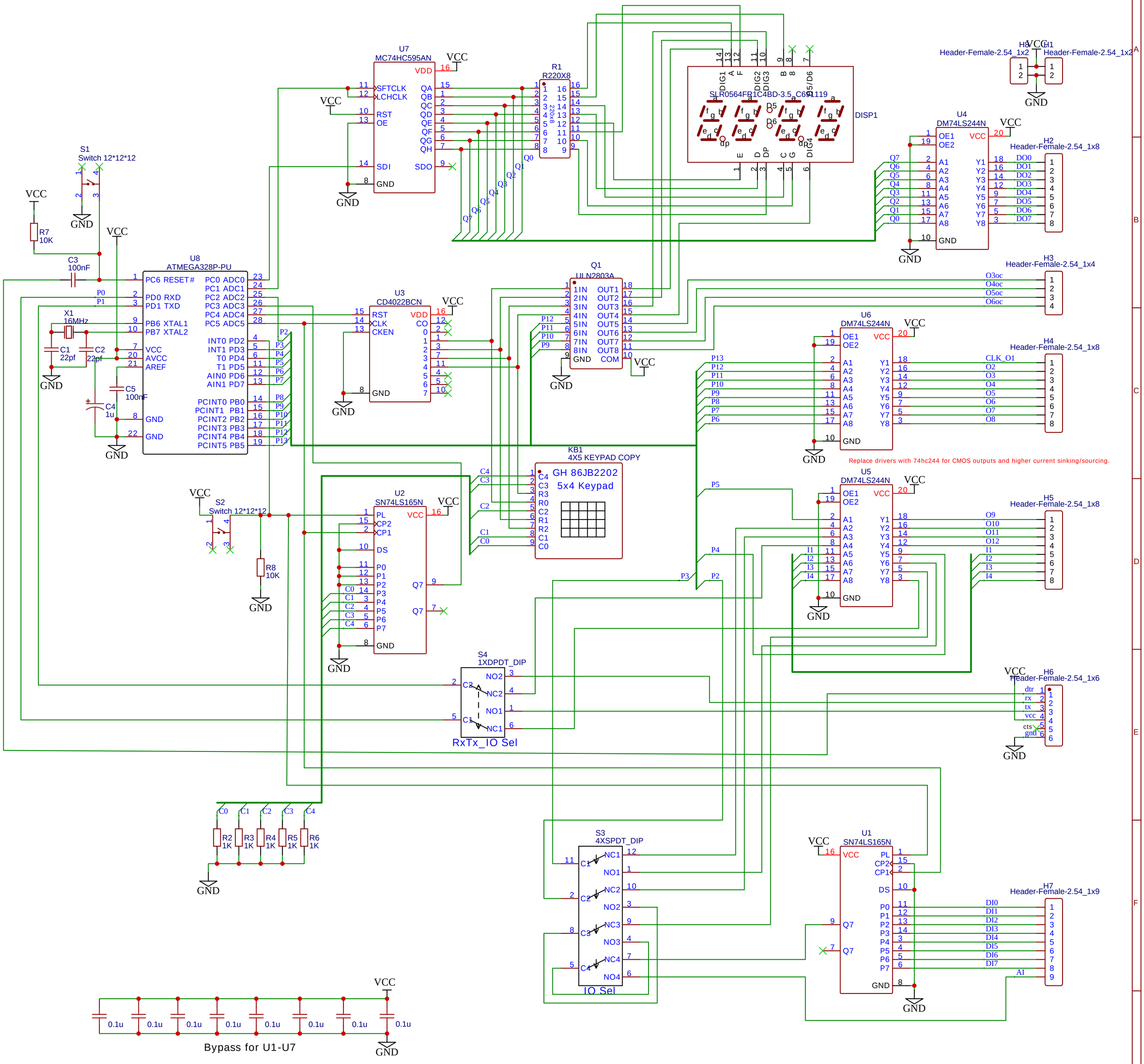

TITLE: Sheet_1	REV: 1.0
Company: Blodg-Tek	Sheet: 1/1
Date: 2020-11-15 Drawn By: Zamberlan	

EasyEDA