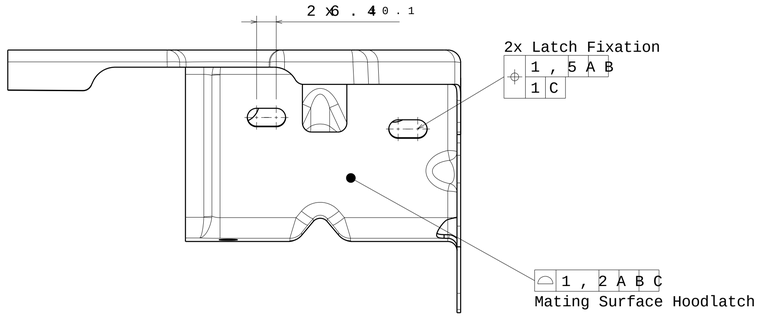

Bottom view
Scale: 1:1

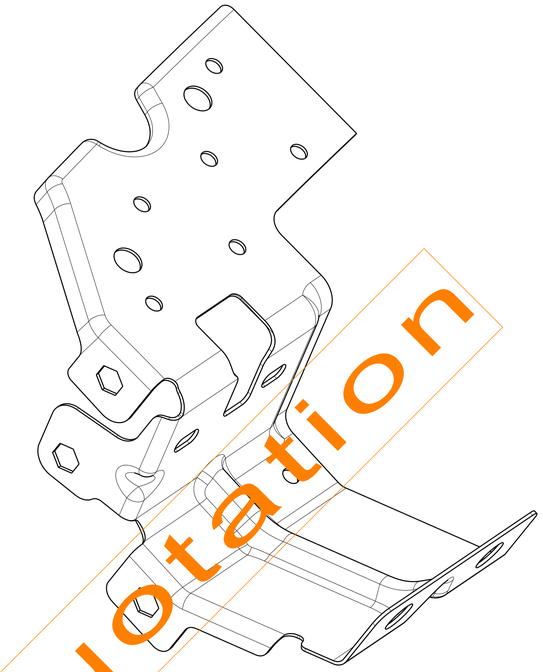

Isometric view
Scale: 1:1

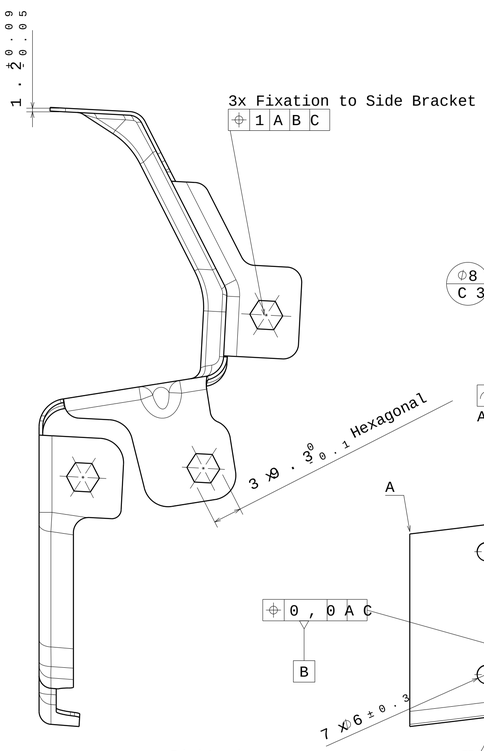

Right view
Scale: 1:1

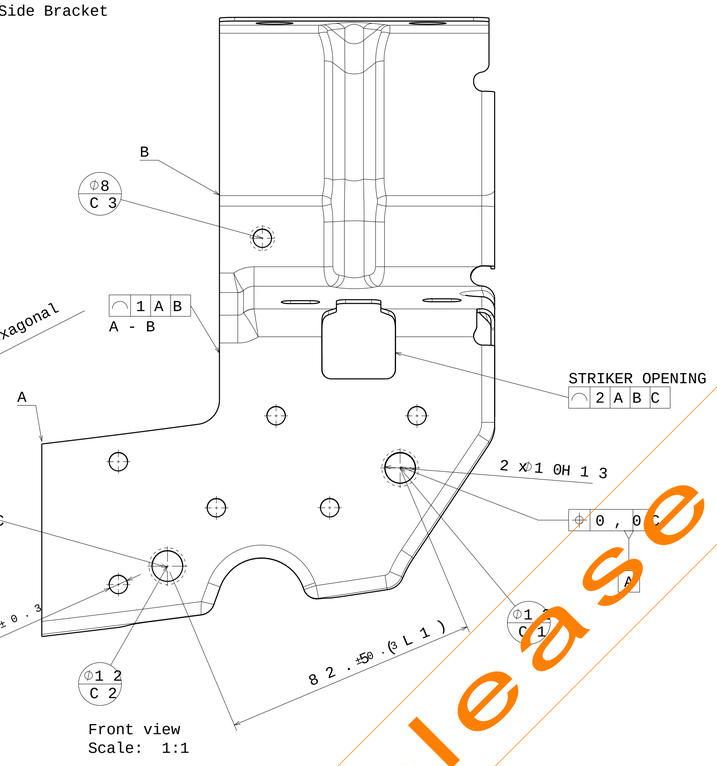

Front view
Scale: 1:1

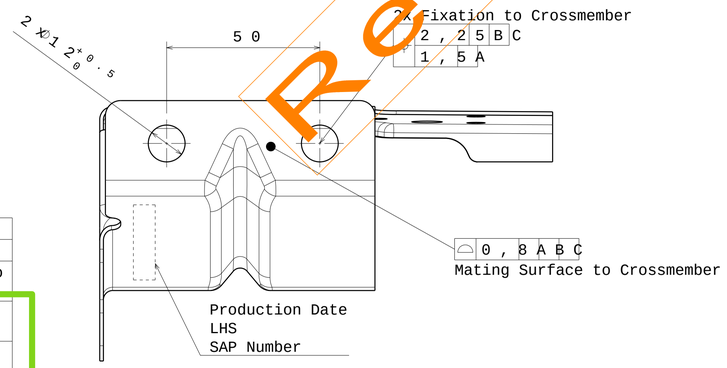

Front view
Scale: 1:1

SAP Nr.:
LH: xxxxxxxxx

Number	Required information
1	Material: DC 04 +ZE 25/25 A PC Acc. to EN10152 (1.0338)
2	Coating: KTL coated black 20µm ±5µm
3	Surface class VCS 5068,759, Burr less 0,2mm
4	Salt Spray Test acc. to: VCS 1027,1449 for 720h
5	RA criteria: L1: 82,5+-0,3mm

1 pezzo DX ed 1 Pezzo SX simmetrico
60000 DX + 60000 SX anno
Lotti mese 7200dx + 7200sx
Peso 1 pz 0,271 kg
MP DC04+ZE25/25 A-PC
Imballo in gibo contenenti 40 pz

Version	Rel.Date	Changed by	Released by	Change Description

All rights reserved

First created by: Schneider	Date: 2023-02-24	3D DATA IS MASTER	
Checked with: --	Date: --	CAD System: CATIA_V5R30	
Released by: --	Date: --	Document Status: --	
Customer: Volvo		Development Location: R&D Worms	Safety-Part: NO
Part Number: 32377780		Customer Release	
Part Description: Steel Bracket FEC LHS		Weight CAD: g/	Sheet: 1/1
DIS-Number: 100000105226	Document Part: 001	DIS-Version: 00	Assignment: Development	Scale: 1:1	Size: A1

For internal use only.
This drawing is for reference only.
3D CAD is master.
Free of Flash

2	A	B	C
2	A	B	C
2	A	B	C

A	X
B	Y
C1-C3	Z

Release for quotation