GENERAL TOLERANCES
Angular dimension +-1° - Roundness range of tolerance from IT4 to IT11. Must be contained within half of dimensional tolerance.
MACHINED holes H14 shafts h14 linear values Js14 -- ROUGH holes H16 shafts h16 linear values Js16
SHEETS cutting/laser cutting/punching Js13 holes H13 bending/pressing Js14 -- ALUMINIUM DIE CASTING Savio Norm 4011_1005_00
PLASTIC MATERIALS according to DIN 16901 -- CAST IRON Savio Norm 4011_1003_00
The general tolerances for ROUGH of plastic (DIN 16901) of aluminium (4011_1005_00), of CAST IRON (4011_1003_00), must be intended H for holes, h for shafts, Js for all the other dimensions

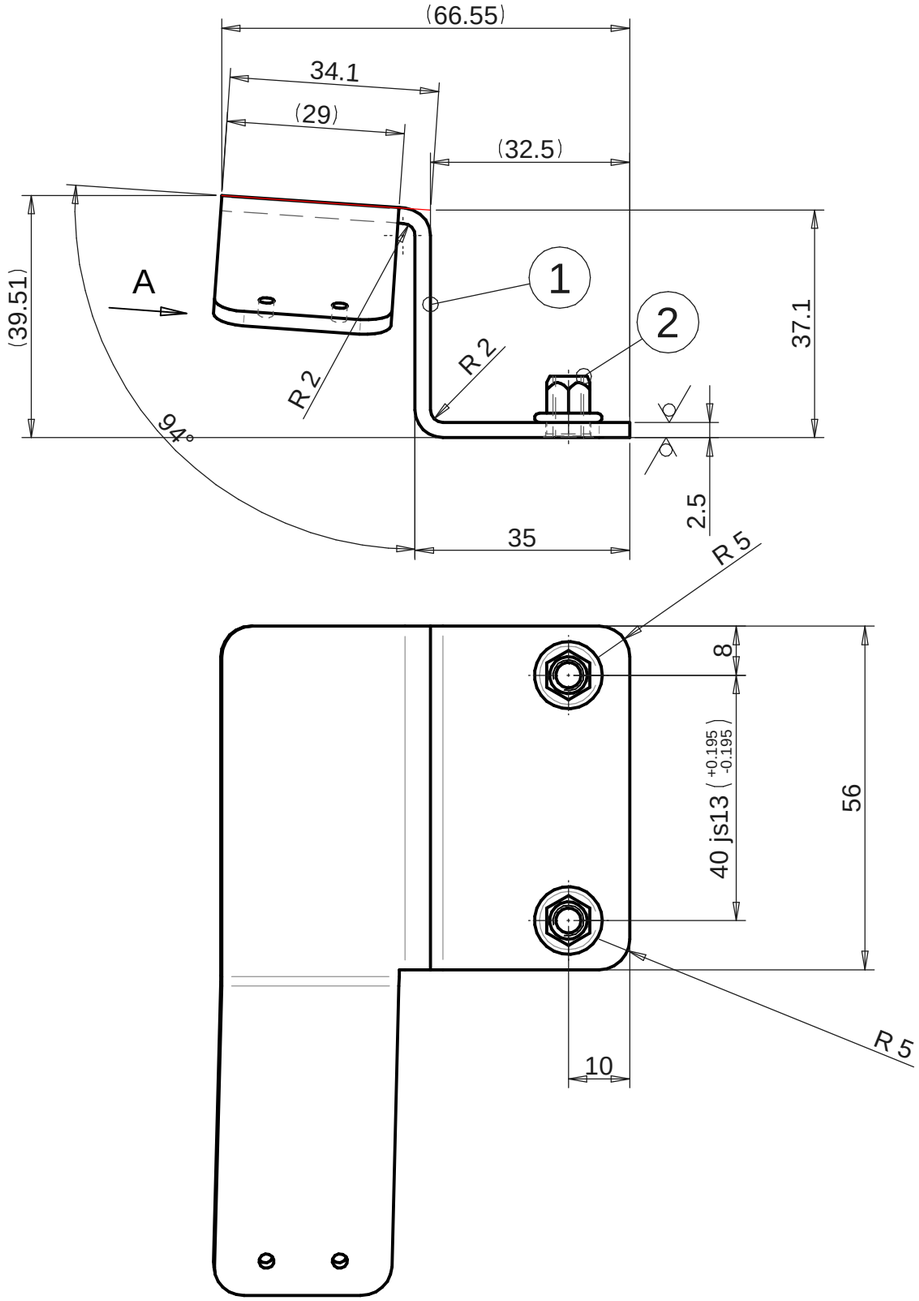

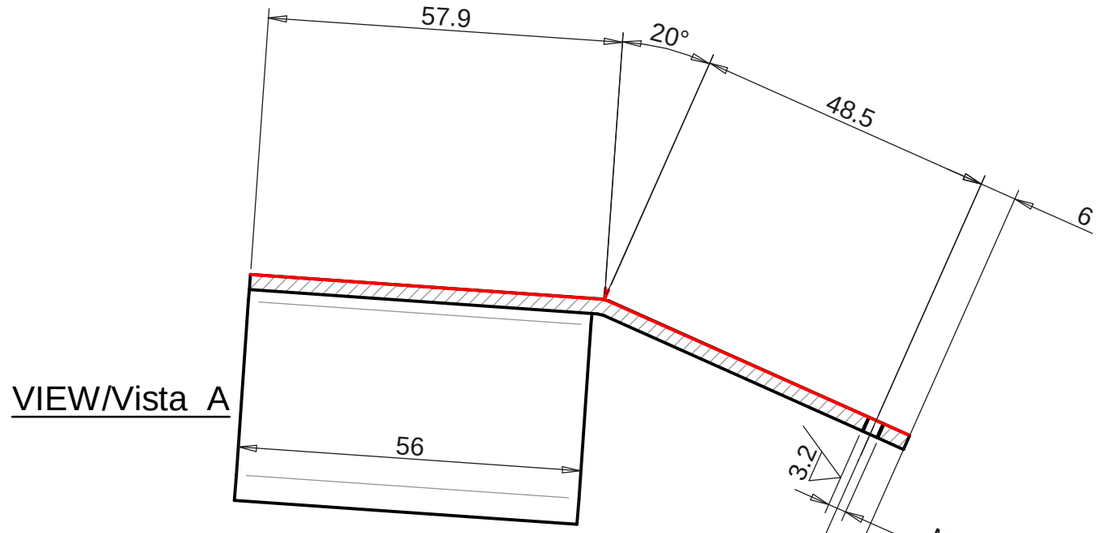

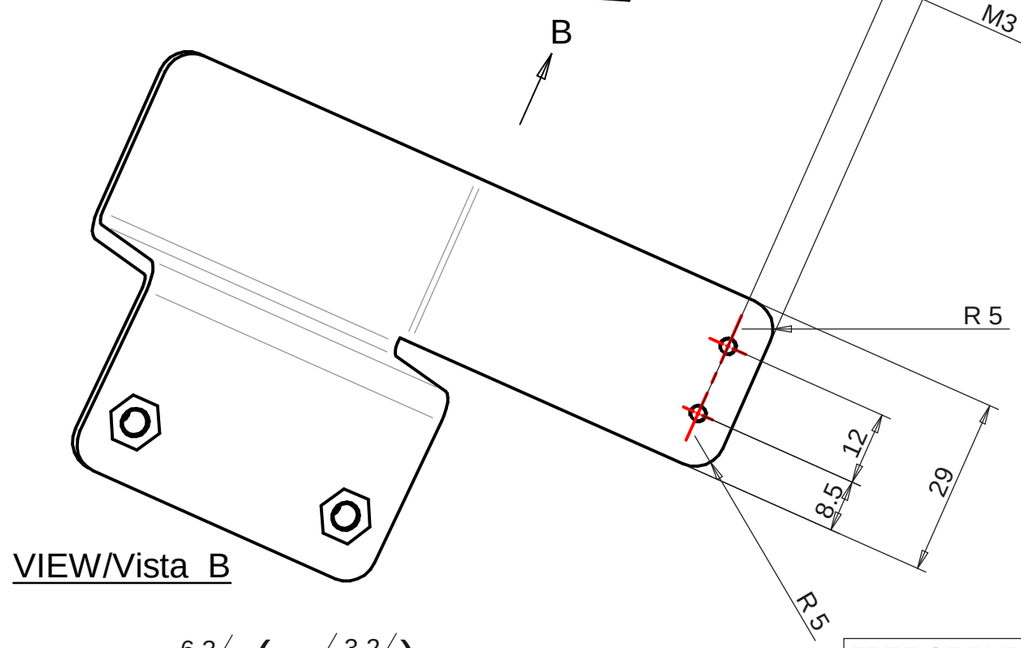

6,3 (3.2)

FREE OF BURRS
INSERT INSERTS AFTER TREATMENT

CN06751				06/07/2023	00
Change	Modification details:			Date Mod:	IRP
Changes to previous release:		Obtain from:	Substitute:		
Material:		Code:			
Supply state:		Dimensions:			
Thermic treat.:		Hardness(T):			
Surface treat.:	Fe/Zn 8÷12 A HP UNI ISO 2081 free Cr VI	Hardness(S):			

DENOMINATION: SUPPORTO CATARIFRANGENTE NSR LYBRA SX

SAVIO	Draw.: Ruggero Nicodemo	Date: 16/06/2023	057506.0.0	
	Mod. : Ruggero Nicodemo	Sheet N°: 1/1		
	App. : Ruggero Nicodemo	Scale: 1:1	SUPPORT	

POS.	Code	Q.ty	Description	Technical Description
2	4026_6102_53	2	INSERT	T.ETFMM0 SPECIALINSERT M5
1	057506.0.A	1	BRACKET	S235J2G3 +N UNI EN 10025

Reserved property of SAVIO MACCHINE TESSILI S.p.A. In accordance with the law, the contents of this drawing may not be re-produced or communicated to third parties.