GENERAL TOLERANCES
Angular dimension +-1° - Roundness range of tolerance from IT4 to IT11. Must be contained within half of dimensional tolerance.
MACHINED holes H14 shafts h14 linear values Js14 -- ROUGH holes H16 shafts h16 linear values Js16
SHEETS cutting/laser cutting/punching Js13 holes H13 bending/pressing Js14 -- ALUMINIUM DIE CASTING Savio Norm 4011_1005_00
PLASTIC MATERIALS according to DIN 16901 -- CAST IRON Savio Norm 4011_1003_00
The general tolerances for ROUGH of plastic (DIN 16901) of aluminium (4011_1005_00), of CAST IRON (4011_1003_00), must be intended H for holes, h for shafts, Js for all the other dimensions

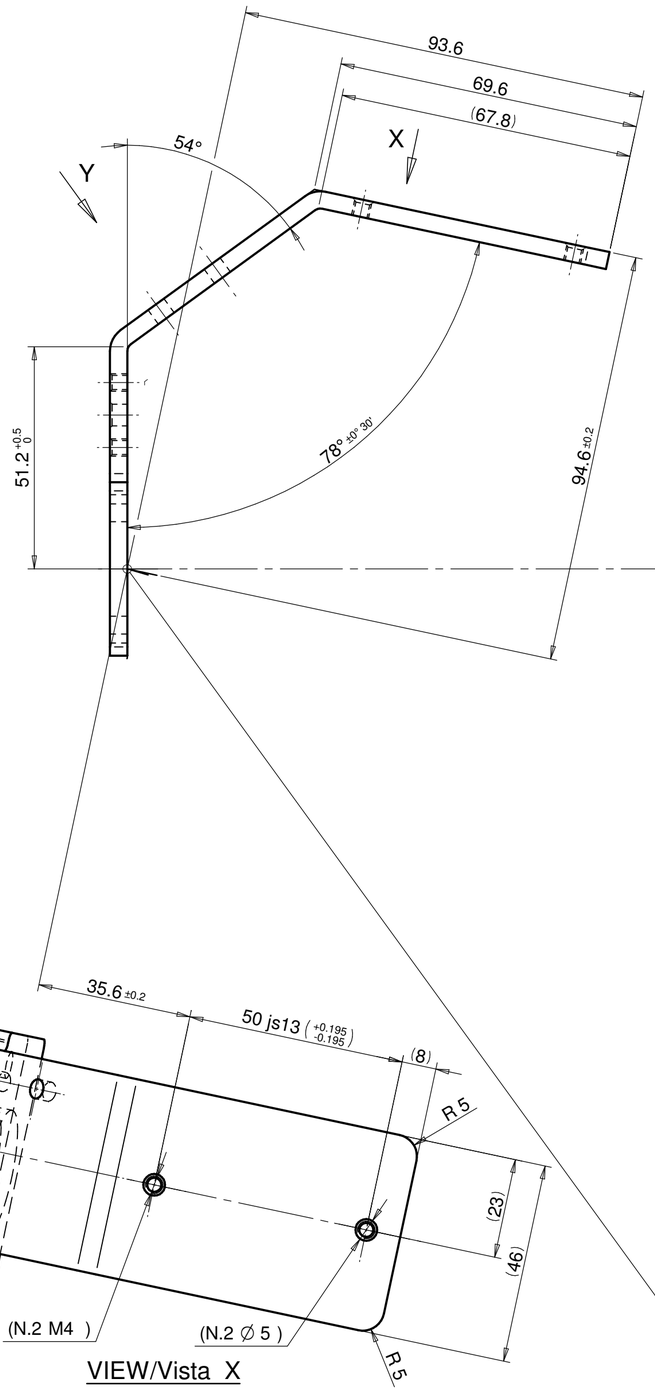

VIEW/Vista X

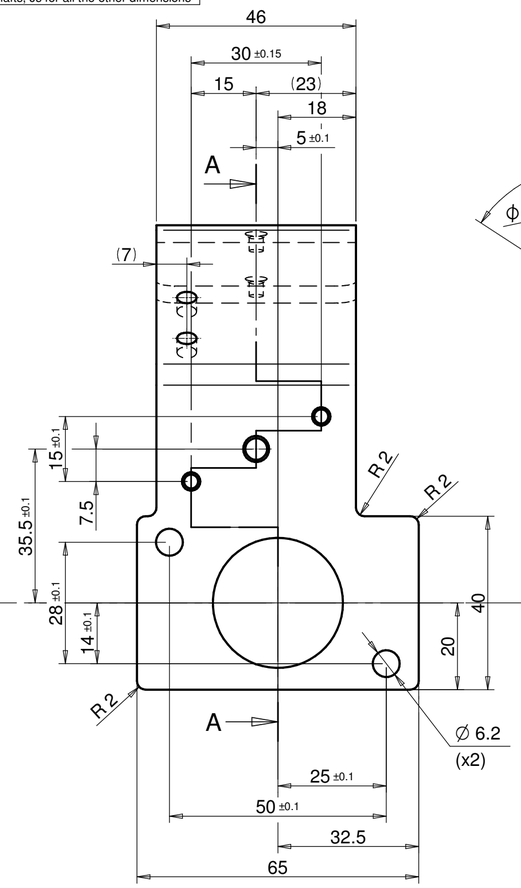

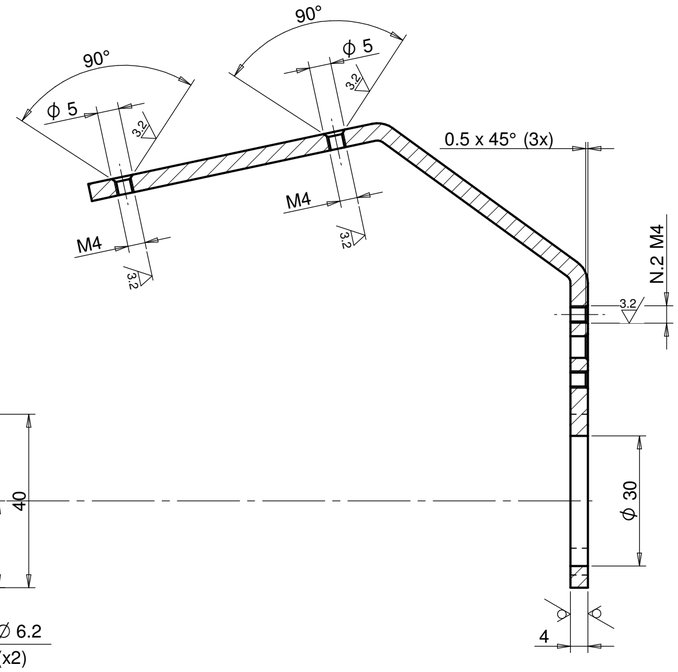

SECT./Sez. A-A

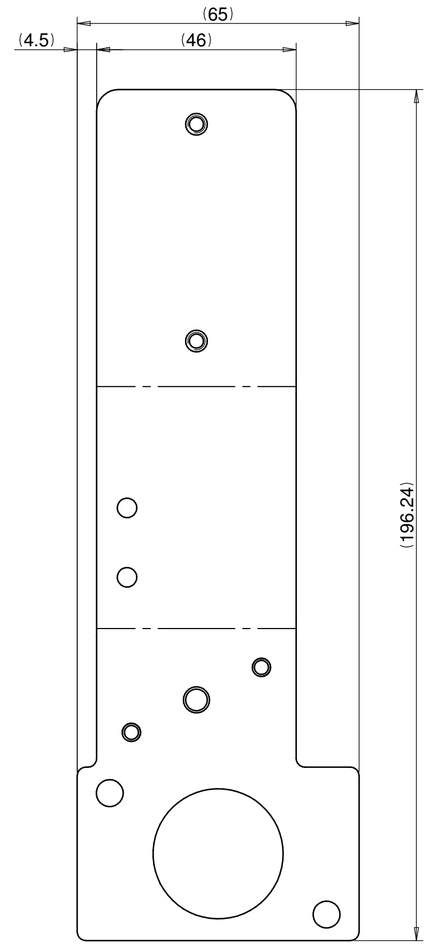

SCALE/Scala: 1:1

NOT VALID FOR TEMPLATE:
DEVELOPMENT CALCULATED WITH
NEUTRAL AXIS STANDARD AT
0.4167 THICKNESS.
Non valido per attrezzatura:
sviluppo calcolato con
asse neutro standard a 0.4167
dello spessore lamiera.

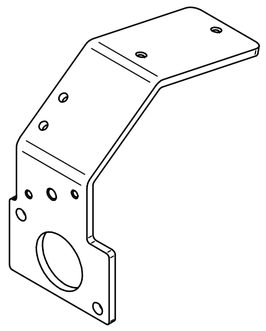

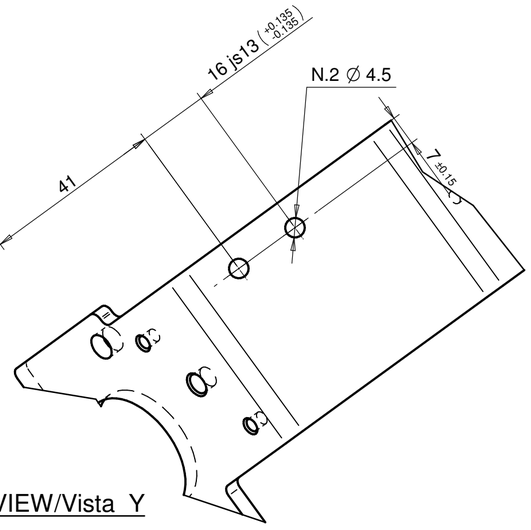

VIEW/Vista Y

6.3 (3.2)

- WEIGHT / Peso : 0,3 kg.
- FREE OF BURRS / Esente da bave
- BENDING INTERNAL RADIUS/Raggi interni di piega: R 2

CN04600			22/10/2021 | 00
Change	Modification details:		Date Mod: | IRP
Changes to previous release: MODIFIED PROFILE		Obtain from:	Substitute: 036768.0.0
Material: DC03 C290 A-MA RL SK UNI EN 10139		Code: 4032_6512_99	
Supply state: 290: COLD DRAWN/HARD SK: ROUDED EDGE		Dimensions:	
Thermic treat.:		Hardness(T):	
Surface treat.: Fe/Zn 8÷12 A HP UNI ISO 2081 free Cr VI		Hardness(S):	

Approved

DENOMINATION: SUPP. PALETTA/PISTONE III POS. SCARICO ROCCA PROXIMA

Savio	Draw.: Gianni D'Andrea	Date: 11/10/2021	036768.1.0
	Mod. : Mauro Del Pup	Sheet N°: 1/1	
	App. : Stefano Malfante	Scale: 1:1	BRACKET

Reserved property of SAVIO MACCHINE TESSILI S.p.A. In accordance with the law, the contents of this drawing may not be re-produced or communicated to third parties.