GENERAL TOLERANCES
Angular dimension +-1° - Roundness range of tolerance from IT4 to IT11. Must be contained within half of dimensional tolerance.
MACHINED holes H14 shafts h14 linear values Js14 -- ROUGH holes H16 shafts h16 linear values Js16
SHEETS cutting/laser cutting/punching Js13 holes H13 bending/pressing Js14 -- ALUMINIUM DIE CASTING Savio Norm 4011_1005_00
PLASTIC MATERIALS according to DIN 16901 -- CAST IRON Savio Norm 4011_1003_00
The general tolerances for ROUGH of plastic (DIN 16901) of aluminium (4011_1005_00), of CAST IRON (4011_1003_00), must be intended H for holes, h for shafts, Js for all the other dimensions

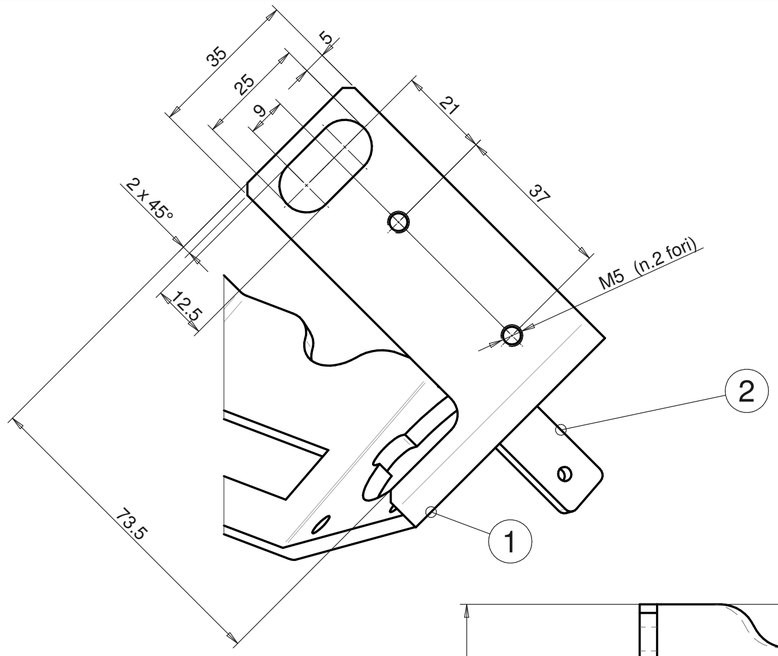

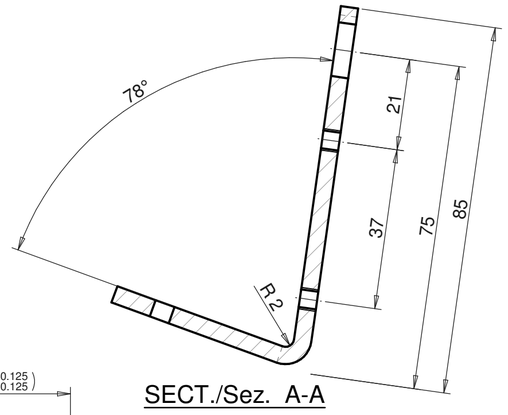

SECT./Sez. A-A

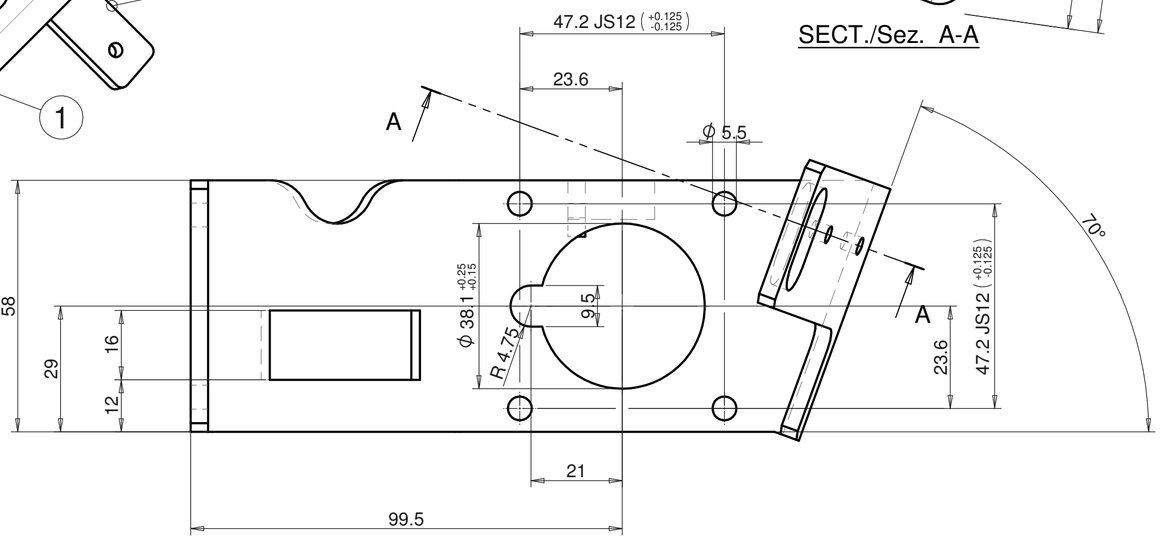

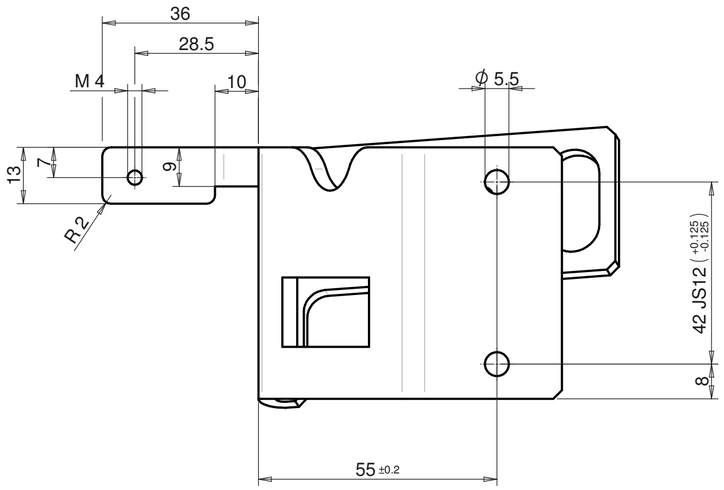

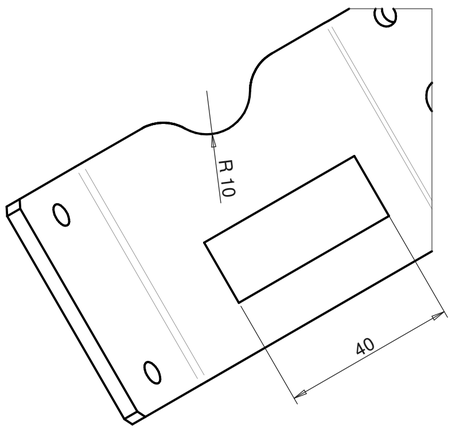

VIEW/Vista B

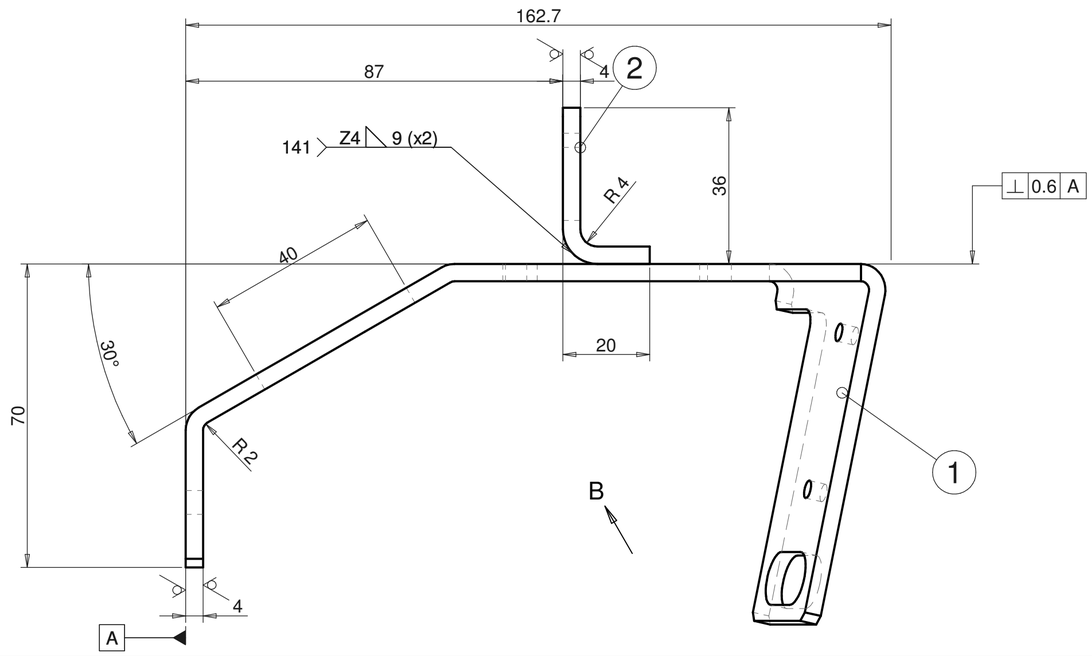

6.3 ( )

BAVA MAX 0.04

POS.	Code	Q.ty	Raw Material	Material Description	Techical Description
2	4032_6036_62	1		Fe 360 D UNI 7070 4x1250x2500	
1	041732.0.A	1		Fe 360 D UNI 7070 4x1250x2500	

CN04474	AGGIIORNATO TOLL. D.38.1 E TOLLPERP.	27/07/2021	01
Change	Modification details:	Date Mod:	IRP
Changes to previous release: AGGIUNTO N.2 FORI M5		Obtain from:	Substitute: 25810_0046_0_0
Material:		Code:	
Supply state:		Dimensions:	
Thermic treat.:		Hardness(T):	
Surface treat.: Fe/Zn 8 c 1A-UNI ISO 2081		Hardness(S):	

Approved

DENOMINATION: PIASTRINA MOTORE RISERVA

Savio	Draw.: Michele Simonatto	Date: 21/12/2020	041732.0.0
	Mod. : Michele Simonatto	Sheet N°: 1/1	
	App. : Giuseppe Morini	Scale: 1:1	SUPPORT

Reserved property of SAVIO MACCHINE TESSILI S.p.A. In accordance with the law, the contents of this drawing may not be re-produced or communicated to third parties.