Detta dokument och informationen i det :
får inte användas, avslöjas eller

This document and the information contained herein is the property

Detta dokument utlämnat till
This document issued to .....

Original format size A3

20|40|140|200 pz

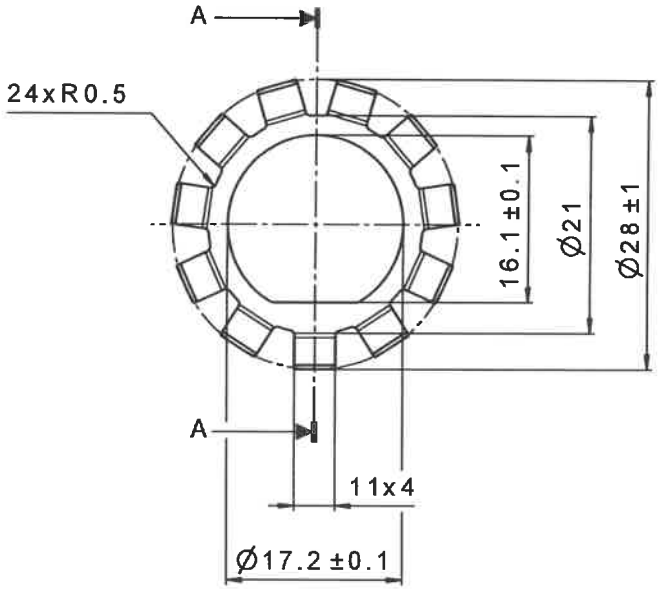

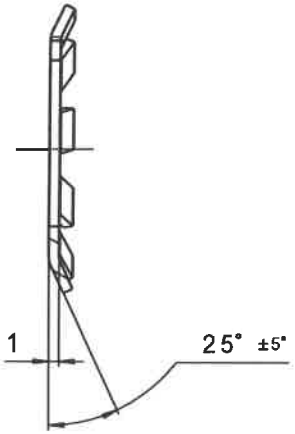

Section view A-A

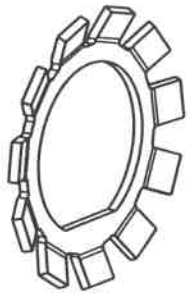

Isometric view
Scale: 2:1

PREMEK HI TECH s.r.l.
Via J. Linussio, 3/5
33170 PORDENONE
P. IVA 0111405093

1. MATERIAL: 1.4301 2B per EN 10028-7
2. SURFACE TREATMENT PASSIVATION PER ASTM-A-967.
   YTBEHANDLING PASSIVERING ENLIGT ASTM-A-967.
3. NO BURRS ALLOWED.
4. KEY CHARACTERISTIC MEASUREMENTS HAVE NOT BEEN DEFINED FOR THIS PART.

Generella krav där ej annat anges/ Unless otherwise specified			Infoklass/ Classification I		
Tolerans/tol allmänna/gen -	Tolerans/tol ISO 2768-1 mK	Tolerans/tol gängor/threads 6h-6H	Sign		År-Månad-Dag Year-Month-Day
			Ritad/Drawa	STKLJ	2020-12-01
Tolerance Vinklar/Angles -	Skarpa kanter brytes/Break sharp edges -		Skala/Scale 2:1	Classification export control Not export controlled	
			Projekt/Project -		
Ytjämnhet/ Surface rough Ra 3.2	Ytbehandling/ Surface treat 2	Material 1	Benämning/Name LOCK WASHER		
				A	8-47136	2122
				Utg/ Issue	ÄO nr/ECO No	ÅÅVV/ YYWW
			Ritnings nr/Dwg No R-30002898-001		Blad/Sheet 1/1

4 3 2 1