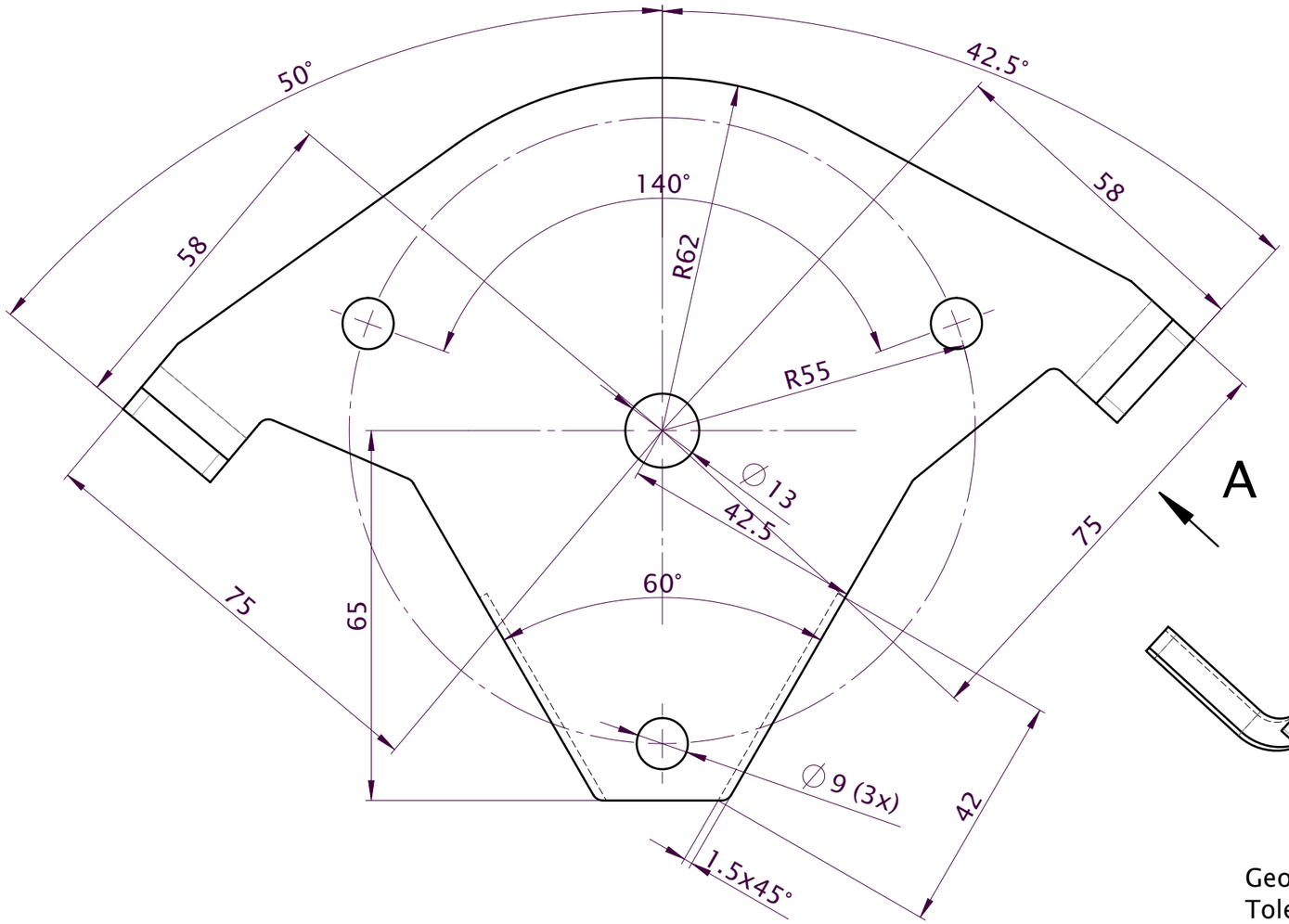

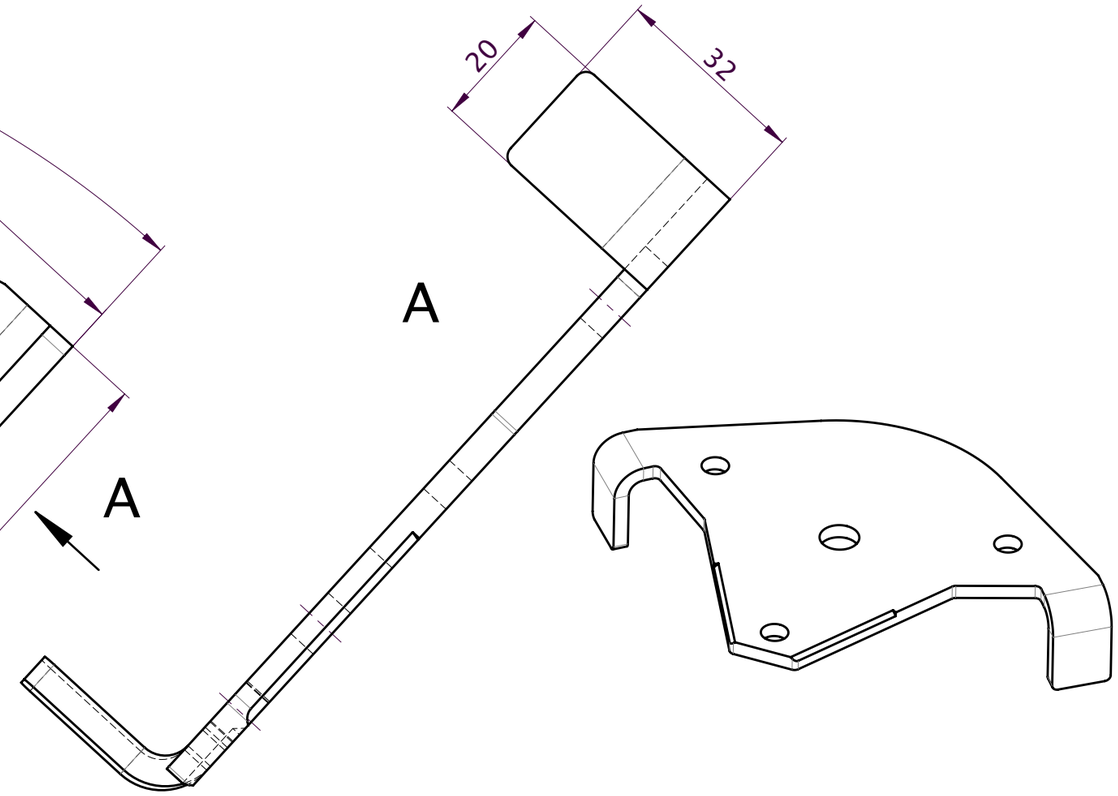

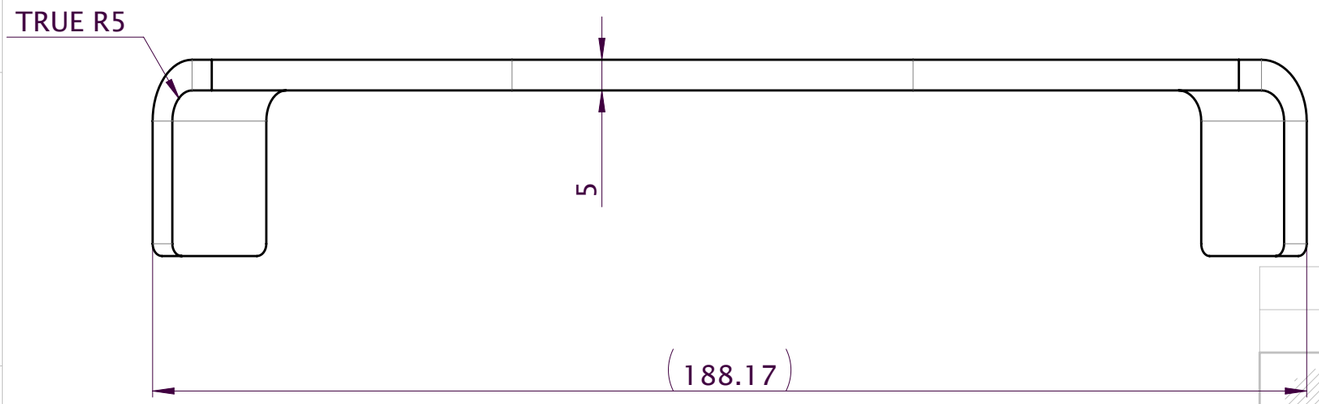

Geometrie definiert durch CAD Daten / geometry defined by CAD data
Tolerierung / Tolerances ISO 8015
Toleranzen nach / Tolerances according to DIN EN ISO 9013 - 1 (Lasern/Laser)
Toleranzen nach / Tolerances according to DIN EN ISO 2768 - c (Biegen/Bending)

Biegeradien = Blechdicke +/-1/
bending radius = sheetmetal thickness +/-1
gratfrei, trowalisiert / free of burrs, rotofinished
galvanisch verzinkt / electrolytic galvanized

part / assembly has to be RoHS / REACH conform

Material	Remark
1.0037 / S235JR / St37-2	

Technical Development

SolidWorks

Diversey
Diversey CH-9542 Münchwilen

Modified:	Martin Forster		
Date:	15-06-2021	Sig:	MF
Checked:	15.06.2021	Sig:	MF
Project:	TRIPLE X		

Autor:	Martin Forster	Scale:	1:1
Date:	07-06-2021	Size:	A 3

SAP No: 4134731 CONFIDENTIAL

Plate
Anschlagplatte

Dwg No: 17654-75 Version: AA

This document is intellectual property of Diversey Europe Operations B.V.. Without formal authorisation it may not be copied, replicated, utilized, nor passed over to anybody. Infringement and non-observance is illegal and will be persecuted.