GENERAL TOLERANCES
Angular dimension +-1° - Roundness range of tolerance from IT4 to IT11. Must be contained within half of dimensional tolerance.
MACHINED holes H14 shafts h14 linear values Js14 -- ROUGH holes H16 shafts h16 linear values Js16
SHEETS cutting/laser cutting/punching Js13 holes H13 bending/pressing Js14 -- ALUMINIUM DIE CASTING Savio Norm 4011_1005_00
PLASTIC MATERIALS according to DIN 16901 -- CAST IRON Savio Norm 4011_1003_00
The general tolerances for ROUGH of plastic (DIN 16901) of aluminium (4011_1005_00), of CAST IRON (4011_1003_00), must be intended H for holes, h for shafts, Js for all the other dimensions

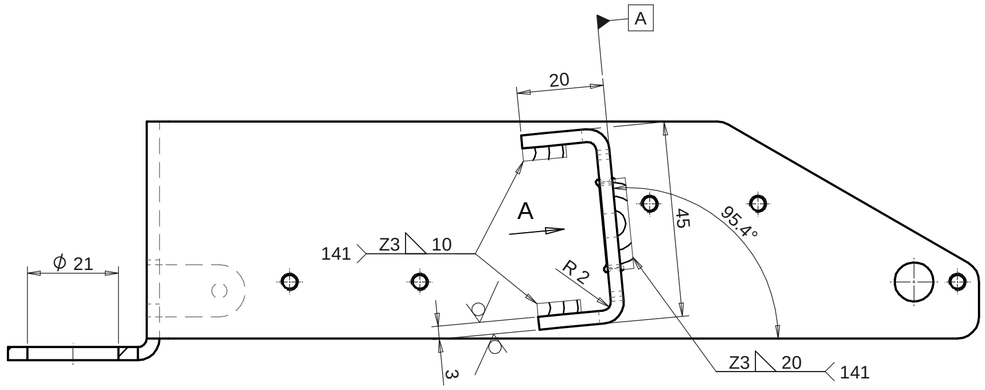

VIEW/Vista A

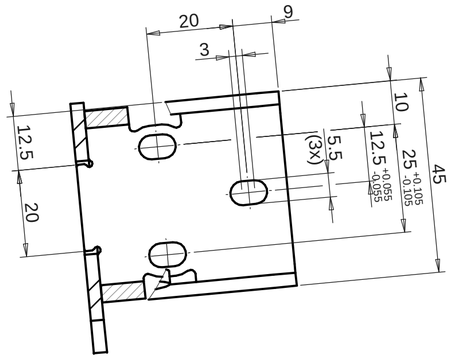

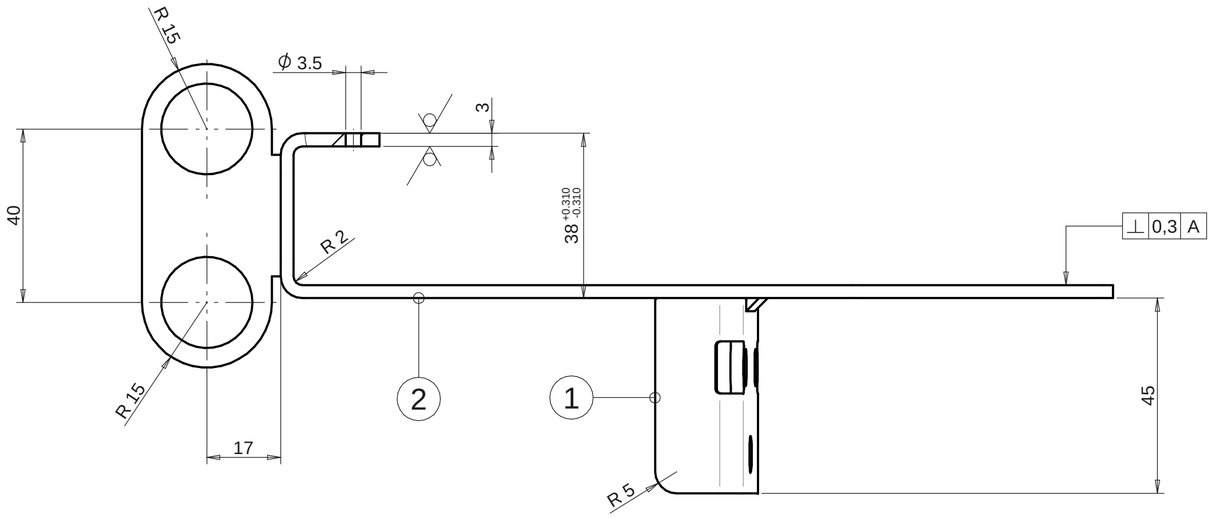

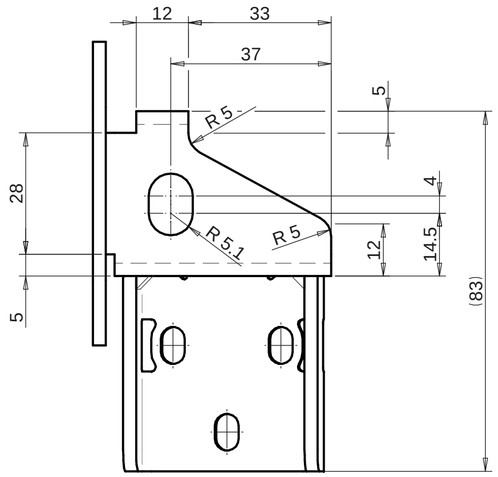

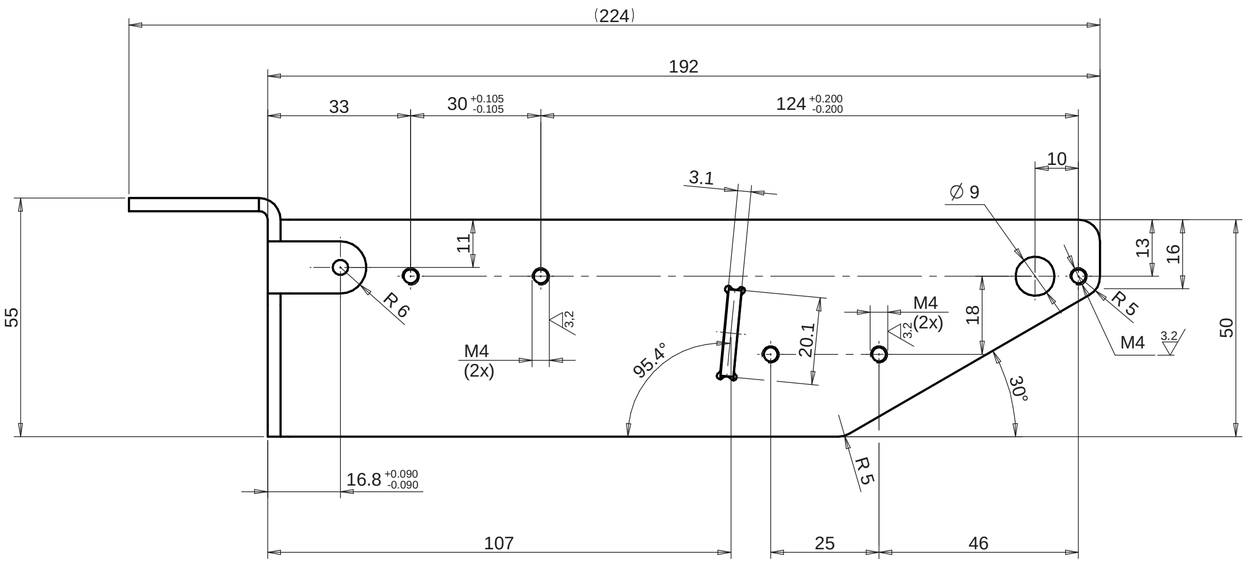

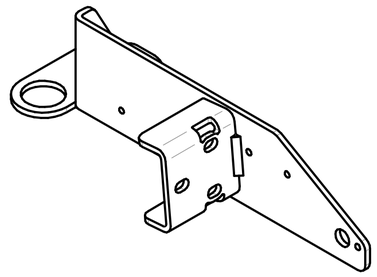

6,3 (3,2)

MAXIMUM BURR 0,15 / BAVA MAX 0,15

POS.	Code	Q.ty	Raw Material	Material Description	Techical Description
2	041669.3.A	1	4032_6002_99	S235J2G3 +N UNI EN 10025	
1	041669.0.B	1	4032_6002_99	S235J2G3 +N UNI EN 10025	

CN06315		23/02/2023	00
Change	Modification details:	Date Mod:	IRP
Changes to previous release:	MODIFIED THE POSITION PARTICULAR 2	Obtain from:	Substitute: 041669.2.0
Material:		Code:	
Supply state:		Dimensions:	
Thermic treat.:		Hardness(T):	
Surface treat.:	Fe/Zn 8÷12 A HP UNI ISO 2081 free Cr VI	Hardness(S):	

DENOMINATION: SUPPORTO GUIDA STRIBBIA

Savio

Draw.: Luca Guarda	Date: 10/11/2022	041669.3.0	
Mod.: Luca Guarda	Sheet N°: 1/1		
App.: Giuseppe Morini	Scale: 1:1	SUPPORT	

Reserved property of SAVIO MACCHINE TESSILI S.p.A. In accordance with the law, the contents of this drawing may not be re-produced or communicated to third parties.