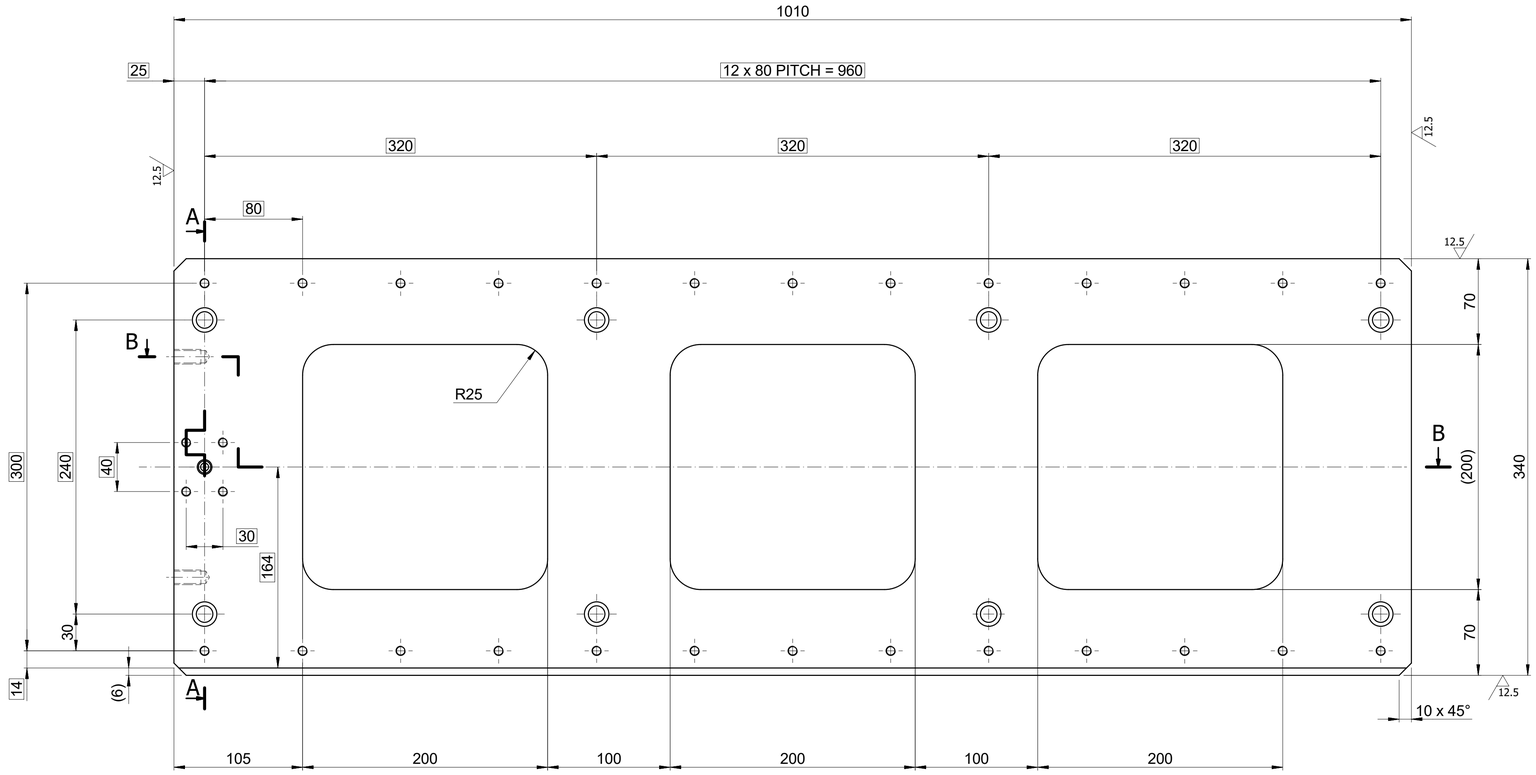

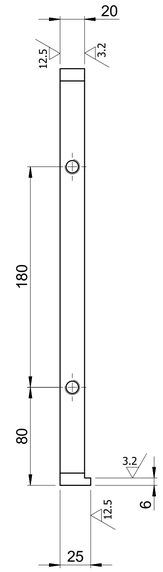

A-A

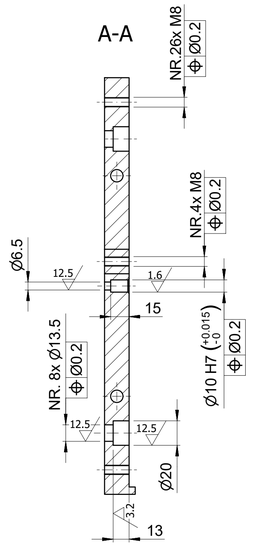

B-B

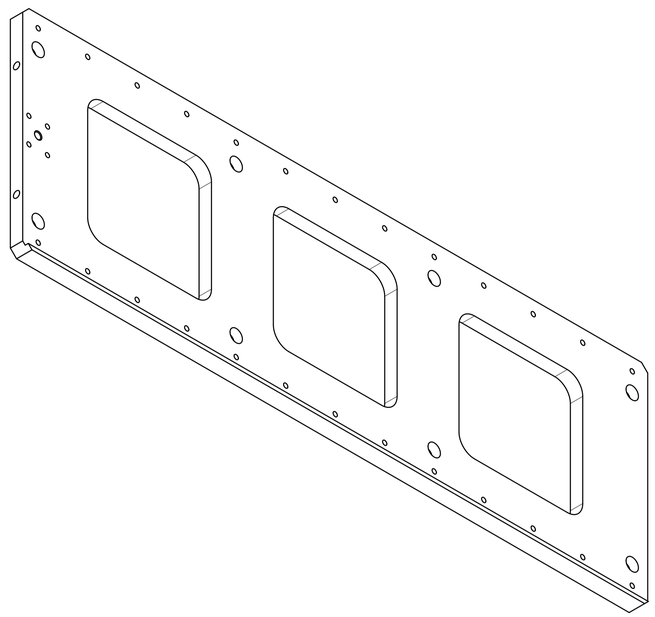

Rev.	Date	Revisions description	Drawn by	Checked by	Approved by
00	06 OCT 2022	ISSUED	PICENIS	PICENI	-

Material 1 (where not indicated on drawing): S275JR – EN 10025-2 | State of supply Mat.1: Danieli Supply Std. | Supply Class | Pattern DB

Material 2 | State of supply Mat.2: Danieli Supply Std. | Supply Class | Casting code

Material 3 | State of supply Mat.3: Danieli Supply Std. | Supply Class

Heat Treatment

On Drawing Symbol, if required,

Coating: NIE – ELECTROLYTIC NICKELING — MINIMUM EFFECTIVE DEPTH [mm]

On Drawing Symbol, if required, — SURFACE HARDNESS [HV]

Unquoted radius	Unquoted bevels	Dimensions without tolerance as per	Roughness	Prec.Class	Max.Welding Class
0.8 (mm)	1X45 (mm)	DANIELI STD 2.4.103	DIN 3141 2.4.105 — 12.5 / 3.2 / 1.6	B	

Project Name

DANIELI

Job nr

Obtained from

Replaces

Classification: MACHINED PLATE

Weight (Kg): 35 — J (Kgm²)

Title: MACHINED PLATE

Scale: 1:2.5

DANIELI Part Number: 000–000–296–895 — Revision: 00

Format: A1

Nr. of sheets: 001

CUSTOMER Part Number — Revision

Sheet: 001 — Follow: /

Copyright c 2022 danieli & c. officine meccaniche s.p.a. – all rights reserved, confidential, property of danieli & c. officine meccaniche s.p.a. unauthorized reproduction, copying, distribution or any other use of the whole or any part of this documentation is strictly prohibited.

File: drw0013591471.idw

COMPUTER AIDED DESIGN – I