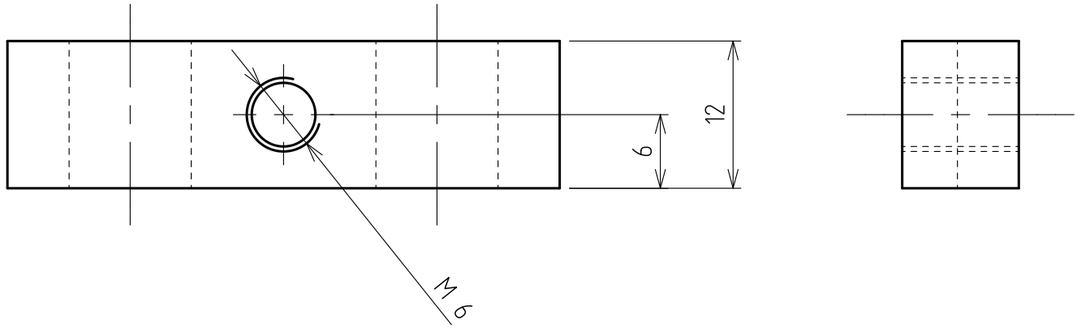

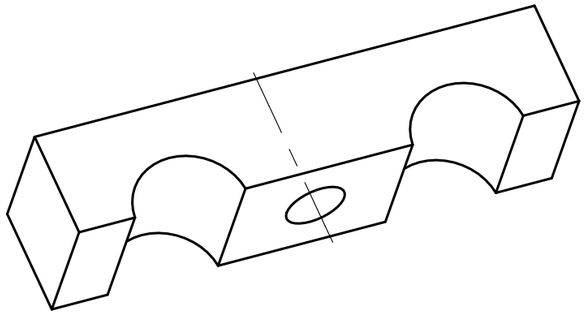

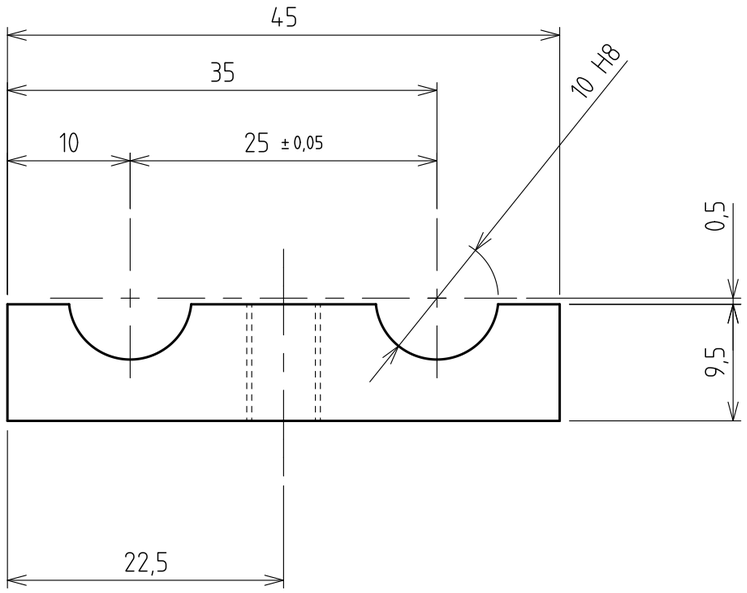

3.2

REVISION DESCRIPTION	MOD.N°	DATE	DRAWN BY	CONTROLLED BY

Zoppas Industries
San Vendemiano (TV) Italy

Generic Machine Tolerance UNI-EN 22768/1	M	REPLACED BY:	
		COMES FROM:	
Generic Machine Tolerance UNI-EN 22768/2	K	REPLACES:	
		SHEET	SCALE: 2:1

MATERIAL	C40E
DELIVERY STATE	
HEAT TREATMENT	
SURFACE TREATMENT	FOSFATAZIONE AL MN
WEIGHT (Kg)	0.0300000
NOTE	

DRAWING N°:

DESCRIPTION:
MORSETTO

DRAWN BY: Fava,M.	CONTROLLED BY: Cettolin,C.	APPROVED BY: Bortot,P.
DATE: 14-Feb-2011	CODE: 40353702 / 00	

This document and the information herein included are IRCA S.p.A. property. It is prohibited to reproduce it or to make it know in whole or in part to other parties without written authorization of IRCA S.p.A.

Each modification must be comunicated and approved in written form by IRCA S.p.A. Qualsiasi modifica deve essere comunicata e approvata in forma scritta da IRCA S.p.A.