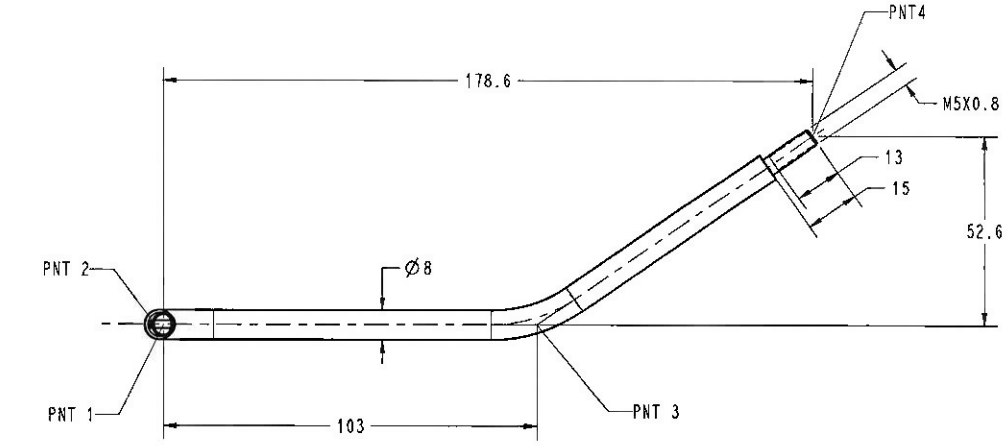

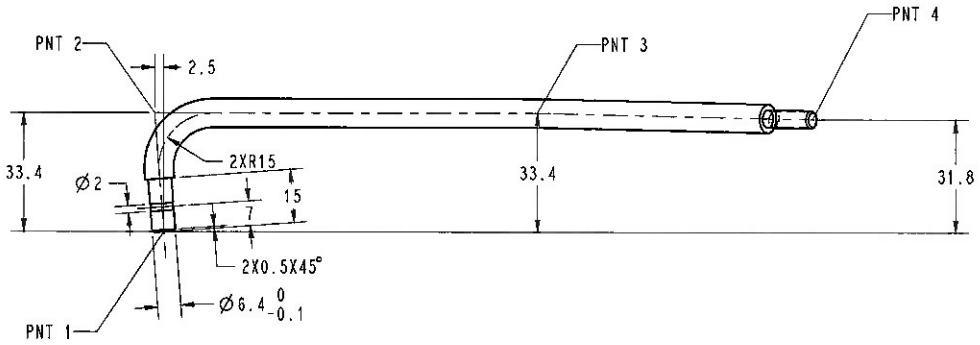

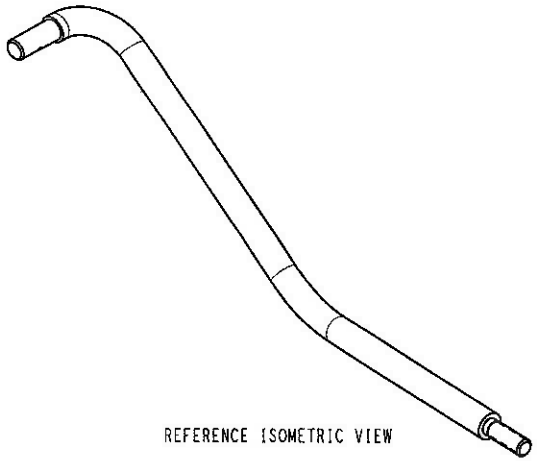

REFERENCE ISOMETRIC VIEW

NOTES:

1. REMOVE ALL BURRS AN SHARP EDGES

2. REFER TO ASSOCIATED 3D MODEL WITH THE SAME PART NUMBER AND REVISION LEVEL FOR THE MODEL GEOMETRY. UNLESS OTHERWISE SPECIFIED, MODEL GEOMETRY REPRESENTS THE NOMINAL SIZE AND DIMENSIONS OBTAINED FROM IT ARE BASIC

STANDARD	DESCRIPTION
DWGB055	GENERAL TOL PER ISO 2768-mK
DWGB001	DRW INTERPRETATION AND SPECS

APPLICABLE STANDARDS

HR ROUND, MAT1031, GRADE A

LOCAL MATERIAL:
HR ROUND, ASTM A36
HR ROUND, EN 10025-2, S235JR

ZINC PLATE, MAT0310, ZN TCR 8

ECO	REV	CHANGES	BY	DATE	ECO	REV	CHANGES	BY	DATE
					35362538	B	RELEASED DRAWING	A AYDOGAN	05JAN23
						A	PRELIMINARY DRAWING	A AYDOGAN	01NOV22

THE INFORMATION HEREON IS CONFIDENTIAL AND THE PROPRIETARY PROPERTY OF CNH INDUSTRIAL N.V. AND/OR ITS SUBSIDIARIES. ANY USE, EXCEPT THAT FOR WHICH IT MAY BE LOANED, IS PROHIBITED.

METRIC

FIRST ANGLE PROJECTION

UNLESS OTHERWISE SPECIFIED ALL DIMENSIONS ARE IN MILLIMETERS, SURFACE FINISH IN MICROMETERS Ra.

DOC NO. - NOM NO	SIZE/STS	DWG SCALE	DSGN CTRL
1.83.0	A2/PRO	1:1	TT

01NOV22 | 09JAN23 | MATERIAL BY | APPROVED BY | APPROXIMATE MASS 0.082 kg

LOCAL MATERIAL: SEE NOTES

CNH MATERIAL: SEE NOTES

DESCRIPTION: ROD, LOCK HOOD

MODEL

TEAMCENTER ITEM ID: CA00AC054260 | TC REV: 002 | SHEET: 1 OF 1

CAGE CODE: 10986 | C CLASS | CRITICAL/TOTAL SC'S: 0/0 | PART NUMBER: 9175