GENERAL TOLERANCES
Angular dimension +-1° - Roundness range of tolerance from IT4 to IT11. Must be contained within half of dimensional tolerance.
MACHINED holes H14 shafts h14 linear values Js14 -- ROUGH holes H16 shafts h16 linear values Js16
SHEETS cutting/laser cutting/punching Js13 holes H13 bending/pressing Js14 -- ALUMINIUM DIE CASTING Savio Norm 4011_1005_00
PLASTIC MATERIALS according to DIN 16901 -- CAST IRON Savio Norm 4011_1003_00
The general tolerances for ROUGH of plastic (DIN 16901) of aluminium (4011_1005_00), of CAST IRON (4011_1003_00), must be intended H for holes, h for shafts, Js for all the other dimensions

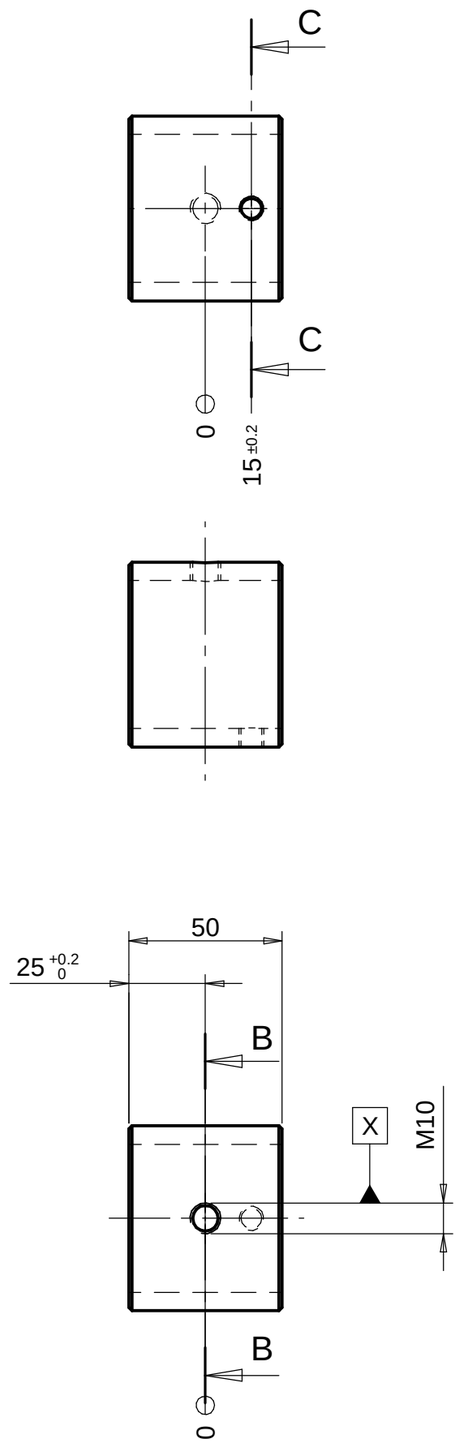

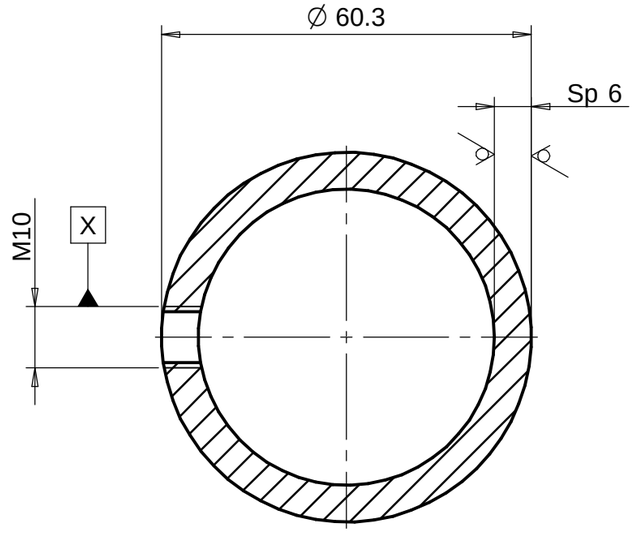

SECT./Sez. B-B
SCALE/Scala: 1:1

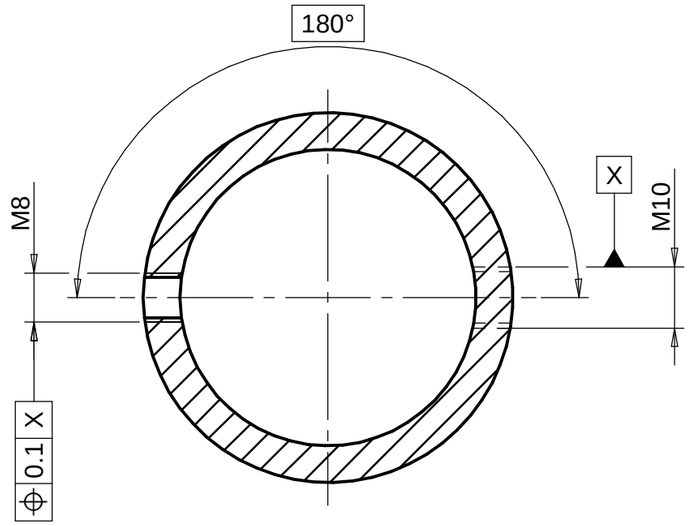

SECT./Sez. C-C
SCALE/Scala: 1:1

3.2 ( )

- UNDIMENSIONED CHAMFER /Smussi non quotati: 1x45°
- FREE OF BURRS AND EDGES/Esente da bave e spigoli vivi.

CN05669		14/04/2022	00
Change	Modification details:	Date Mod:	IRP

Changes to previous release:		Obtain from:	Substitute:
Material:	TUBO S235JRH+C UNI EN 10219/2	Code:	4032_4134_99
Supply state:	+'C': COLD DRAWN	Dimensions:	
Thermic treat.:		Hardness(T):	
Surface treat.:	Fe/Zn 8÷12 A HP Dehydrogenated UNI ISO 2081 free Cr VI	Hardness(S):	

DENOMINATION: SUPPORTO DI CODA TRAVERSA ASSI STIRO

Savio	Draw.: Luigi Gorgatti	Date: 02/03/2022	050583.0.0	
	Mod.: Luigi Gorgatti	Sheet N°: 1/1		
	App.: Giuseppe Morini	Scale: 1:2.5	PIPE	

Reserved property of SAVIO MACCHINE TESSILI S.p.A. In accordance with the law, the contents of this drawing may not be re-produced or communicated to third parties.