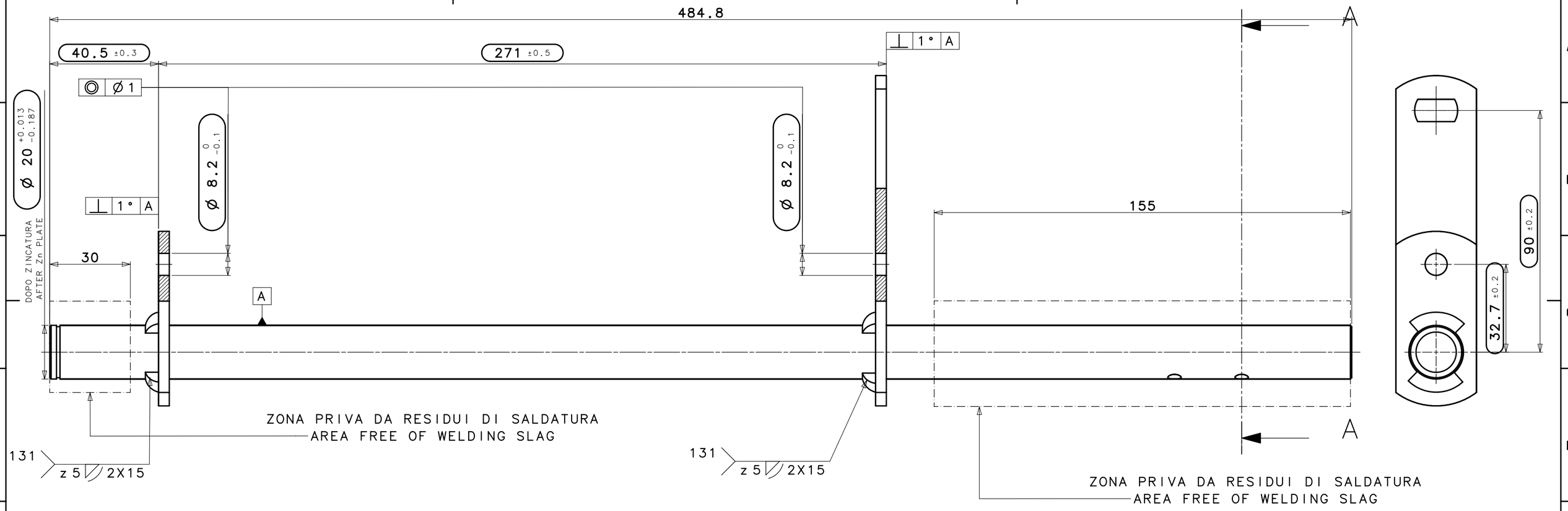

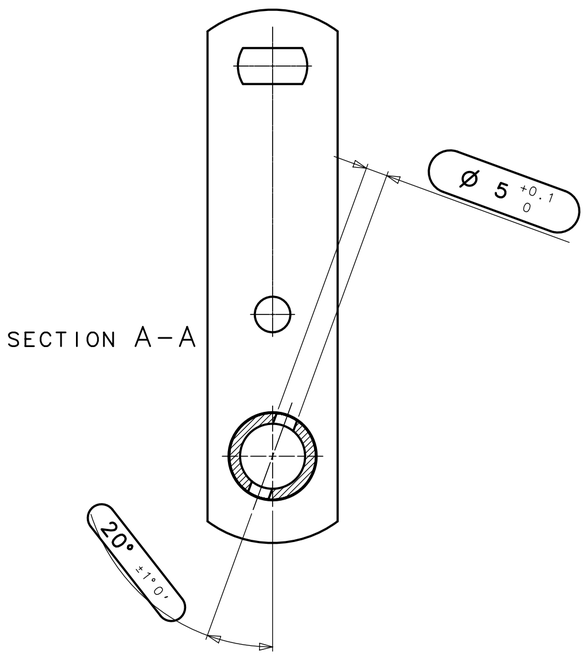

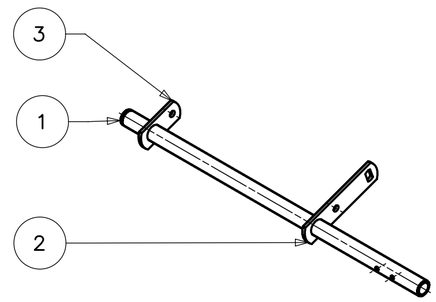

QUOTE DI CONTROLLO OBBLIGATORIE PER FORNITORE E/O QUA (FOGRQUA02)
MANDATORY CONTROL PLAN DIMENSIONS FOR SUPPL. AND/OR QUA (FOGRQUA02)

Imballare e movimentare il particolare evitando urti e deformazioni
Package and move the part avoiding collision and deformation

– Codice grezzo
Raw code = 82000478/1

PC NO	PART NAME	QTY
3	25318162_0	1
2	27315064_1	1
1	25032102_0	1

RCI	DRI	DATE	DESIGN	DESCRIPTION	SIGN	DATE
0	C	.	.	.		.
0	B	.	.	.		.
2	A	11.03.14	DB	DISEGNO NX-DRAWING NX - AGGIORNAMENTO TRAT. SUP.-UPDATE OF COATING - AGGIUNTO INGLESE -ENGLISH NOTES ADDED		11.03.14

MATERIALE / MATERIAL
Generico /Generic .
Specifico /Specific .
Codice GGP /GGP Code .

Descriz.: ASS. ASSE COMMANDO SOLLEVAMENTO PIATTO
Descript.: ASSY LIFT COMMAND AXLE CD

Gruppo: SOLLEVAMENTO PIATTO
Group: CUTTER DECK LIFT UP

Modello: TC - HONDA
Model:

Tratt. Superf. Fe/Zn12c1B ZINC. BIANCA / WHITE ZINC PLATING
Coating UNI ISO 4042:2003 LIBERA DA CROMO 6 - CHROME 6 FREE
Tratt. Termico .
Thermal Treatm. .
Finitura Superf.
Surface Finishing

Scala 1:1 | Project: . | Foglio /Sheet 1/1 | Q.ty 1
Peso/Weight kg | FOR MISSING DIMENSIONS REF. TO 3D FILE

Tolleranze non indicate / Not indicated tolerances: UNI 22768/1 f m c v | DIN 16901 110 120 130 140 150 160 | UNI 22768/2 H K L | UNI 10569 1 2 3

Component class. / Class. componente: SAFETY | CRITICAL | AESTETIC

Dimension symbols according to GGP norm / Simboli quote secondo norma GGP
PR GR RoD 201
S SAFETY CHARACTERISTIC
n° RELEVANT FOR DIMENSIONAL VERIFICATION
◆ RELEVANT FOR INCOMING INSPECTION AND PRODUCTION

GGP ITALY S.p.A. Technical Department

Attrezz./Tool .
Dima controllo /Control jig .
Codice N. / Part No. 3 82000479 RCI 2

Questo disegno e' proprieta' di GGP ITALY SPA senza la cui autorizzazione non puo' essere utilizzato ne' riprodotto.
GGP ITALY SPA tutela i propri diritti a termine di legge.
This drawing contains GGP ITALY SPA proprietary information. Neither receipt nor possession thereof confers any right to reproduce, use or disclose, in whole or part, any such information without written authorization from GGP ITALY SPA. All right of design or invention are reserved following the law.