GENERAL TOLERANCES
Angular dimension +-1° - Roundness range of tolerance from IT4 to IT11. Must be contained within half of dimensional tolerance.
MACHINED holes H14 shafts h14 linear values Js14 -- ROUGH holes H16 shafts h16 linear values Js16
SHEETS cutting/laser cutting/punching Js13 holes H13 bending/pressing Js14 -- ALUMINIUM DIE CASTING Savio Norm 4011_1005_00
PLASTIC MATERIALS according to DIN 16901 -- CAST IRON Savio Norm 4011_1003_00
The general tolerances for ROUGH of plastic (DIN 16901) of aluminium (4011_1005_00), of CAST IRON (4011_1003_00), must be intended H for holes, h for shafts, Js for all the other dimensions

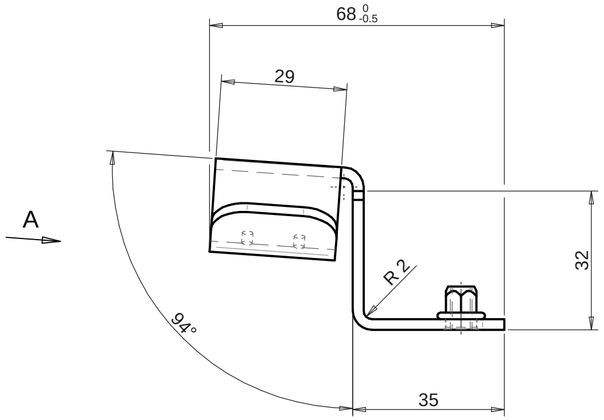

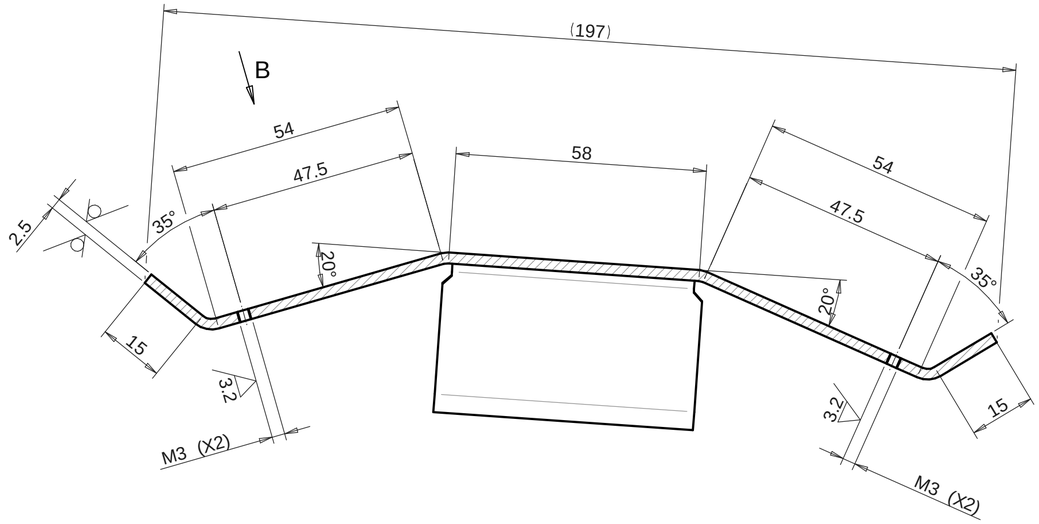

VIEW/Vista A

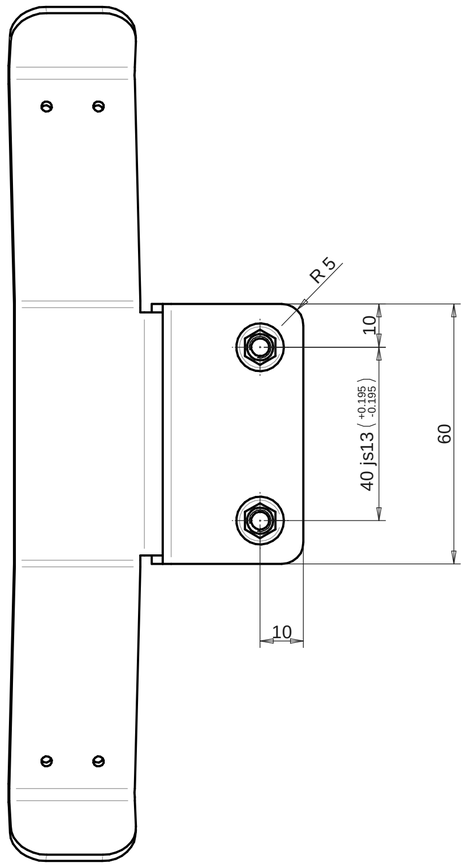

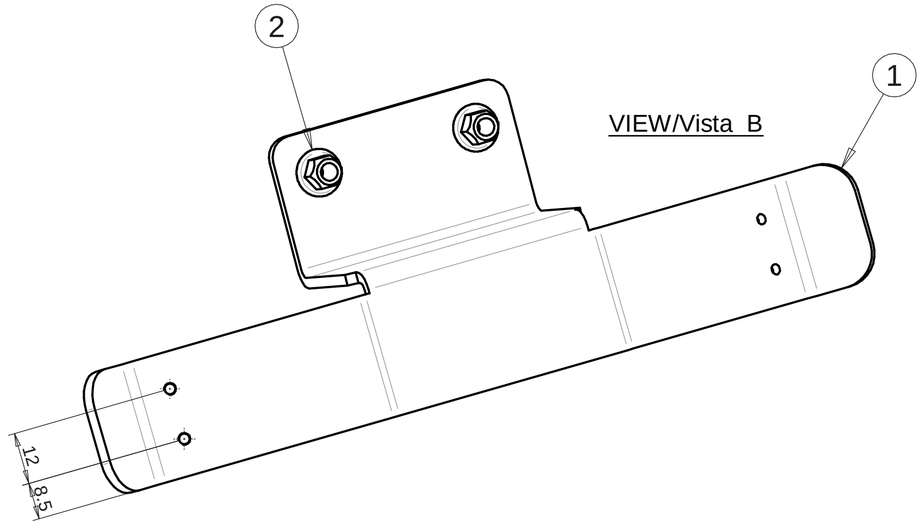

VIEW/Vista B

6,3 (3.2)

FREE OF BURRS
INSERT INSERTS AFTER TREATMENT

POS.	Code	Q.ty	Description	Technical Description	
2	4026_6102_53	2	INSERT	T.ETFMM0 SPECIALINSERT	M5
1	052921.0.A	1	BRACKET	S235J2G3 +N UNI EN 10025	

Change	Modification details:	Date Mod:	IRP
CN06089		21/09/2022	00

Changes to previous release:	Obtain from:	Substitute:
Material:	Code:	
Supply state:	Dimensions:	
Thermic treat.:	Hardness(T):	
Surface treat.: Fe/Zn 8÷12 A HP UNI ISO 2081 free Cr VI	Hardness(S):	

DENOMINATION: SUPPORTO CATARIFRANGENTE NSR

SAVIO	Draw.: Luca Guarda	Date: 15/09/2022	052921.0.0
	Mod.: Luca Guarda	Sheet N°: 1/1	
	App.: Giuseppe Morini	Scale: 1:1	SUPPORT

Reserved property of SAVIO MACCHINE TESSILI S.p.A. In accordance with the law, the contents of this drawing may not be re-produced or communicated to third parties.