GENERAL TOLERANCES
Angular dimension +-1° - Roundness range of tolerance from IT4 to IT11. Must be contained within half of dimensional tolerance.
MACHINED holes H14 shafts h14 linear values Js14 -- ROUGH holes H16 shafts h16 linear values Js16
SHEETS cutting/laser cutting/punching Js13 holes H13 bending/pressing Js14 -- ALUMINIUM DIE CASTING Savio Norm 4011_1005_00
PLASTIC MATERIALS according to DIN 16901 -- CAST IRON Savio Norm 4011_1003_00
The general tolerances for ROUGH of plastic (DIN 16901) of aluminium (4011_1005_00), of CAST IRON (4011_1003_00), must be intended H for holes, h for shafts, Js for all the other dimensions

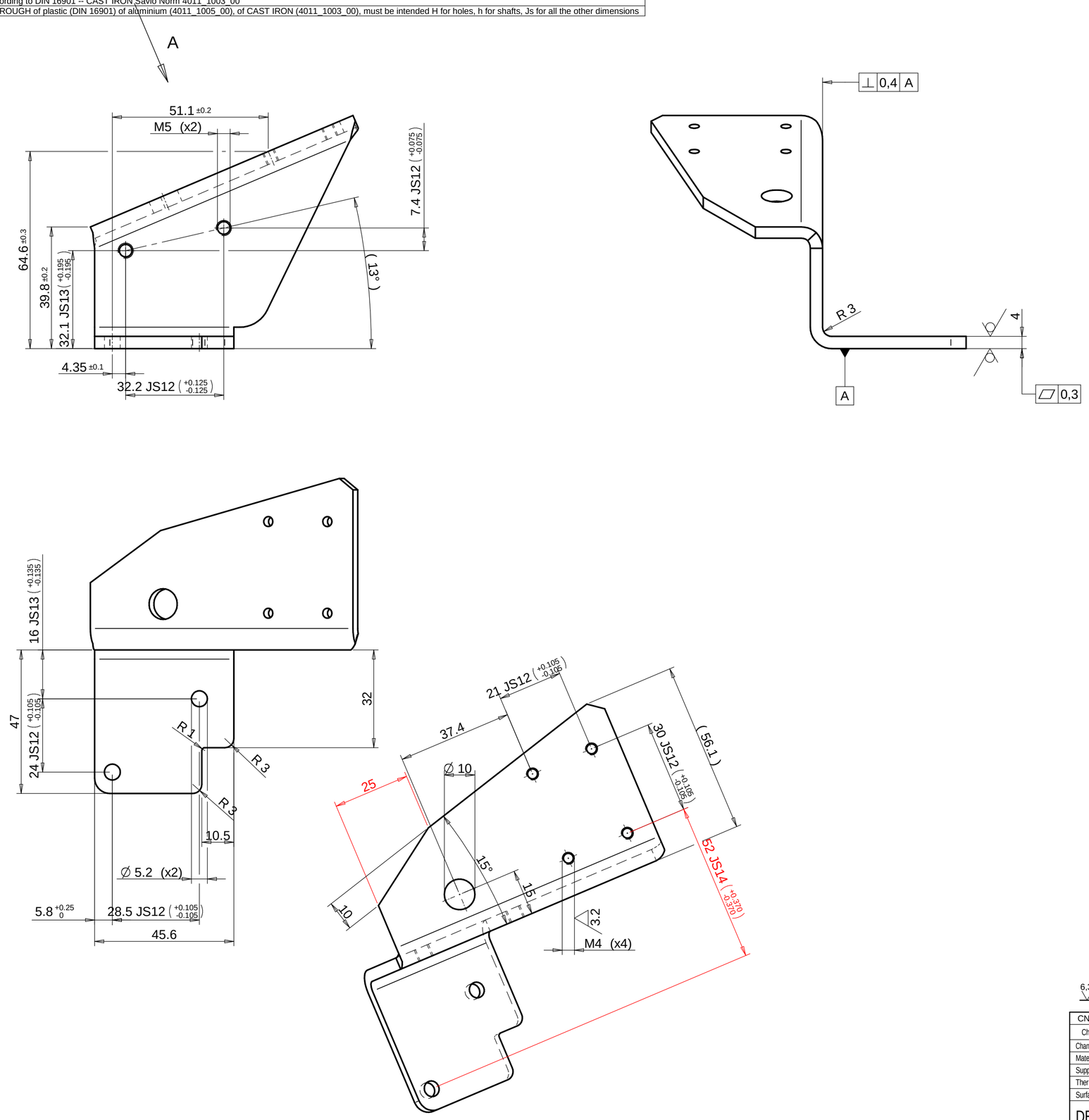

VIEW/Vista A

PER LE QUOTE MANCANTI RIF. MODELLO 3D
DIMENSION NOT INDICATED ON 3D MODEL
BAVA MASSIMA 0,04 mm / MAXIMUM BURR 0,04 mm

CN05436	Reduced dimen. to 52 mm (F-2); Modif. to 25 (D-3)	11/07/2022	01
Change	Modification details:	Date Mod:	IRP

Changes to previous release:		Obtain from:	Substitute:
Material:	DC03 C290 A-MA RL SK UNI EN 10139	Code:	4032_6512_99
Supply state:	290: COLD DRAWN/HARD SK: ROUDED EDGE	Dimensions:	NASTRO 3x300
Thermic treat.:		Hardness(T):	
Surface treat.:	Fe/Zn8c2c UNI ISO 2081 free Cr VI	Hardness(S):	

DENOMINATION: SUPPORTO CAMMA ED INTRODUTTORE PROXIMA M/L

SAVIO	Draw.: Gianni D'Andrea	Date: 19/03/2021	043217.0.0
	Mod.: Renzo Del Bianco	Sheet N°: 1/1	
	App.: Stefano Malfante	Scale: 1:1	BRACKET

Reserved property of SAVIO MACCHINE TESSILI S.p.A. In accordance with the law, the contents of this drawing may not be re-produced or communicated to third parties.