| GENERAL TOLERANCES |
|---|
| Angular dimension +-1° - Roundness range of tolerance from IT4 to IT11. Must be contained within half of dimensional tolerance. |
| MACHINED holes H14 shafts h14 linear values Js14 -- ROUGH holes H16 shafts h16 linear values Js16 |
| SHEETS cutting/laser cutting/punching Js13 holes H13 bending/pressing Js14 -- ALUMINIUM DIE CASTING Savio Norm 4011_1005_00 |
| PLASTIC MATERIALS according to DIN 16901 -- CAST IRON Savio Norm 4011_1003_00 |
| The general tolerances for ROUGH of plastic (DIN 16901) of aluminium (4011_1005_00), of CAST IRON (4011_1003_00), must be intended H for holes, h for shafts, Js for all the other dimensions |

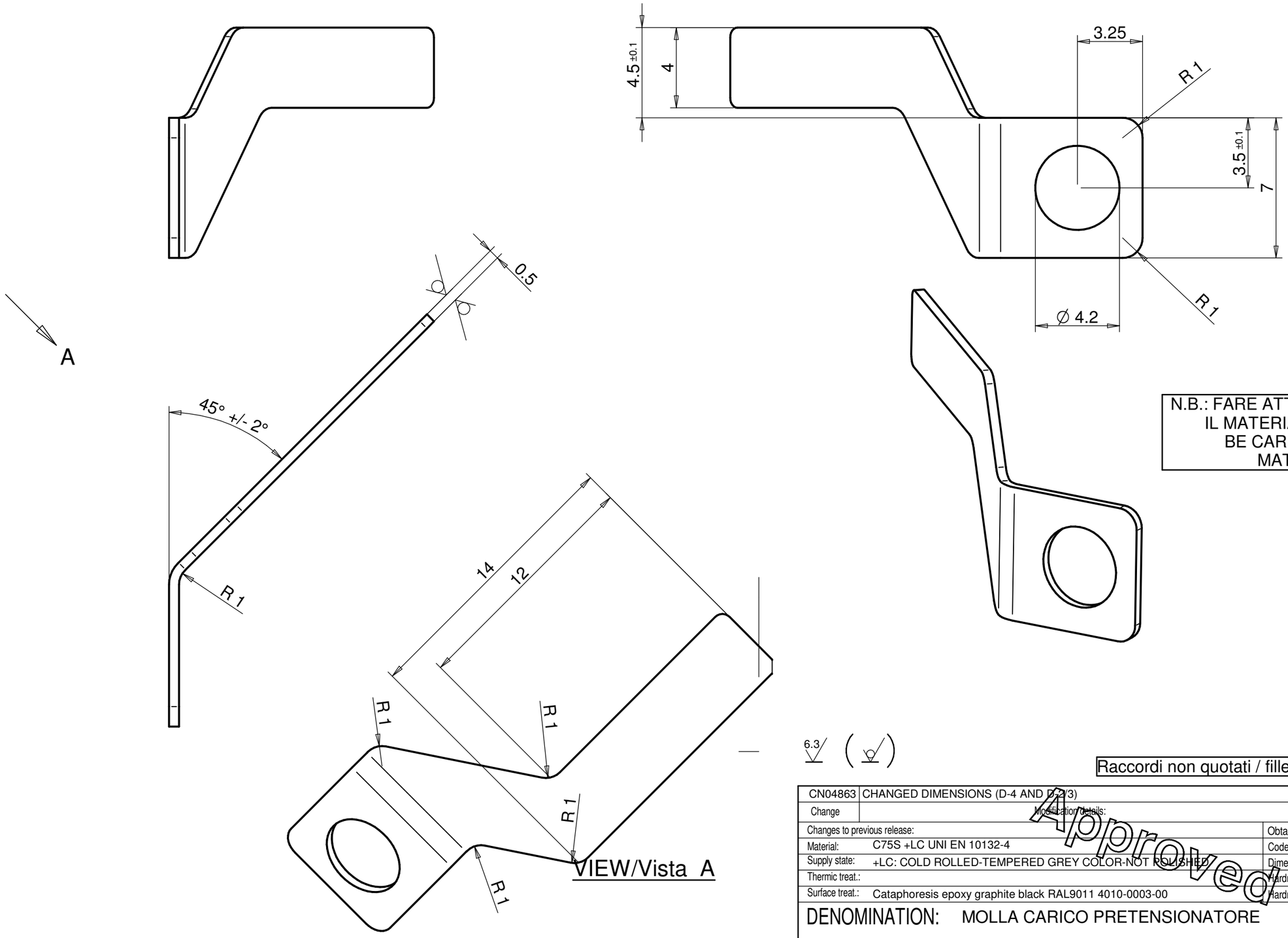


N.B.: FARE ATTENZIONE A NON SNERVARE IL MATERIALE DURANTE LA PIEGATURA
BE CAREFUL DO NOT SNERVE THE MATERIAL WHEN BENDING

6.3 ( )

esente da bave / no burr

Raccordi non quotati / fillets without dimensions : R=0,5 mm

| | | | |
|---|---|---|---|
| CN04863 | CHANGED DIMENSIONS (D-4 AND D-2/3) | 13/07/2021 | 02 |
| Change | Modification details: | Date Mod: | IRP |

| | | | |
|---|---|---|---|
| Changes to previous release: | | Obtain from: | Substitute: |
| Material: | C75S +LC UNI EN 10132-4 | Code: | 4032_6474_99 |
| Supply state: | +LC: COLD ROLLED-TEMPERED GREY COLOR-NOT POLISHED | Dimensions: | |
| Thermic treat.: | | Hardness(T): | |
| Surface treat.: | Cataphoresis epoxy graphite black RAL9011 4010-0003-00 | Hardness(S): | |

Approved

DENOMINATION: MOLLA CARICO PRETENSIONATORE


Ros s.r.l.
Via Crosera, 42 - Zona Industriale
33082 AZZANO DECIMO (PN)
Tel. 0434 633318 r.a. - Fax 0434 640639
C.F. e P. IVA 01278530934


| | | | |
|---|---|---|---|
| Draw.: | Renzo Del Bianco | Date: 11/11/2020 | 036571.3.0 |
| Mod. : | Renzo Del Bianco | Sheet N°: 1/1 | |
| App. : | Stefano Malfante | Scale: 5:1 | BLADE SPRING |


accordance with the law, the contents of this drawing may not be re-produced or communicated to third parties.