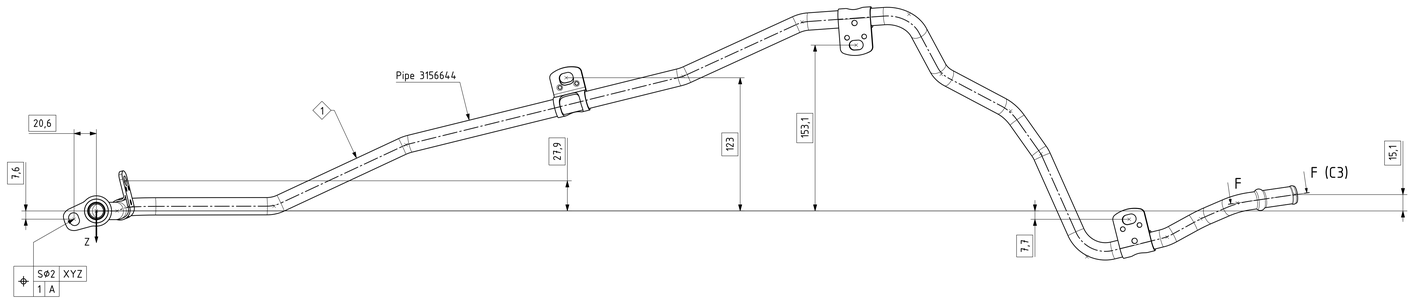

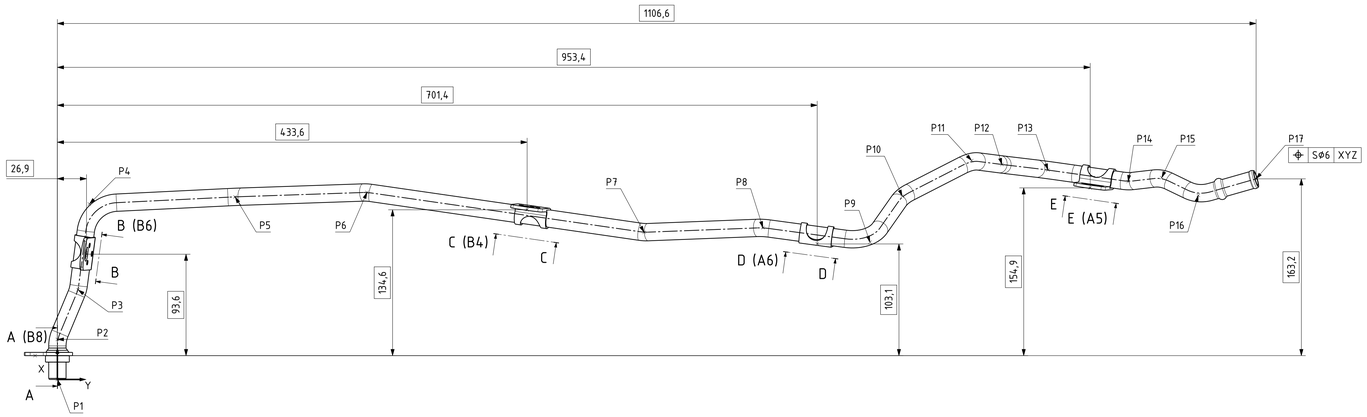

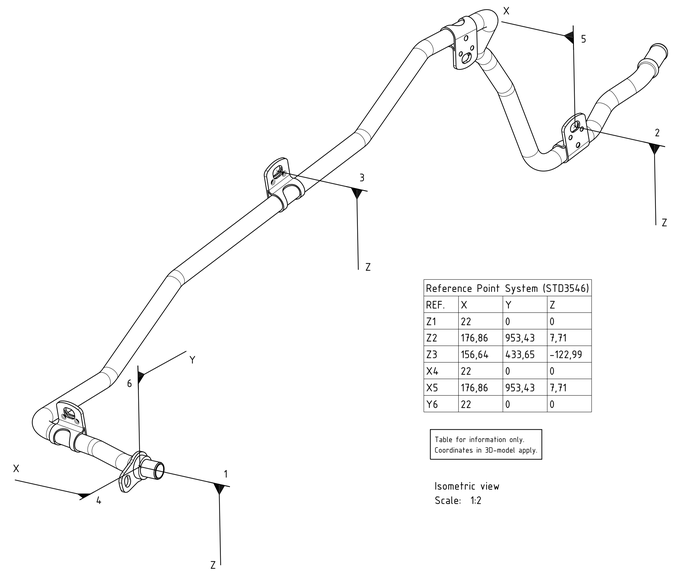

Reference Point System (STD3546)			
REF.	X	Y	Z
Z1	22	0	0
Z2	176,86	953,43	7,71
Z3	156,64	433,65	-122,99
X4	22	0	0
X5	176,86	953,43	7,71
Y6	22	0	0

Table for information only.
Coordinates in 3D-model apply.

Isometric view
Scale: 1:2

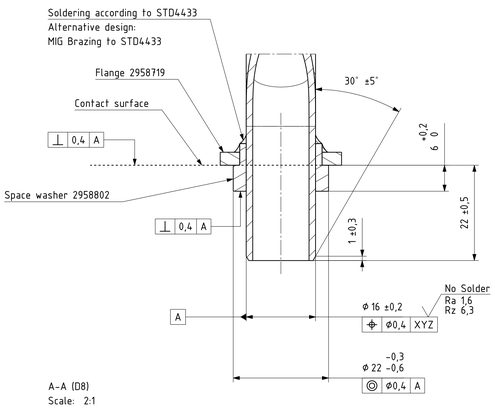

A-A (D8)
Scale: 2:1

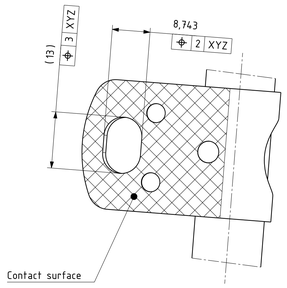

B-B (D8)
Scale: 2:1

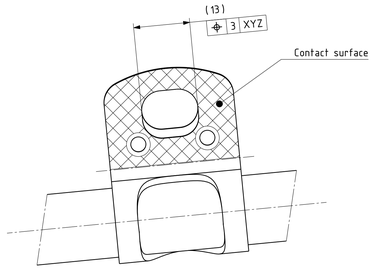

C-C (D7)
Scale: 2:1

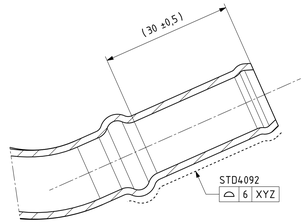

F-F (F4)
Scale: 2:1

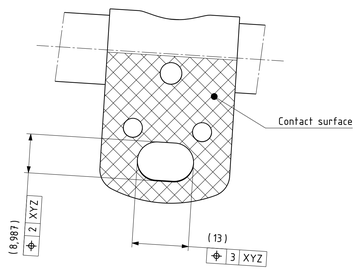

D-D (D6)
Scale: 2:1

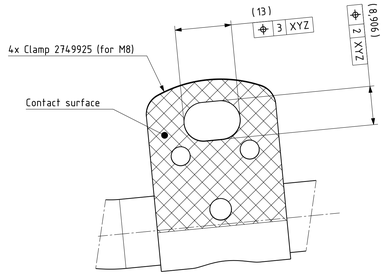

E-E (D5)
Scale: 2:1

Dimensions of bent pipe	STD3875		SV-1268-00
Unless otherwise stated the following applies Profile tolerance of the pipe centre ⌒ Ø6 related to specified basic X, Y, Z and R dimensions			
Bending radius in the center line of the pipe R 30			
Coordinate point	X coordinate	Y coordinate	Z coordinate
P1	0	0	0
P2	37	0	0
P3	82,77	19,13	0
P4	161,98	29,51	-4,21
P5	168,57	164,05	-4,41
P6	172,72	285,85	-61,18
P7	135,85	541,62	-124,25
P8	140,12	651,33	-174,47
P9	126,79	750,18	-181,55
P10	169,25	779,96	-126,16
P11	202,05	844	-92,3
P12	198,46	871,94	-52,81
P13	193,41	914,44	42,35
P14	182,73	988,48	24,1
P15	186,3	1019,44	7,14
P16	170,02	1053,21	-7,38
P17	185,21	1106,56	-15,09

Table for information only.
Coordinates in 3D-model apply.

Position of coordinates STD4463
Geometrical tolerances STD3753

Applies to contact surface ⌓ 3 XYZ

Geometrical tolerances
General filter specification
unless otherwise stated:
STD SS-EN ISO 1101 TF: S2,5-×50-

Surface treatment pipe: STD4111-D2-PS Only Electro Dip Coating
Colour requirement: Black
Pipe blank/dimension: Ø16x1.5
Pipe material: Steel. STD4169-1C2K. SS-EN 10305-4.

Valid for inner surface of the pipe

Cleanliness requirement
Acc. to Scania STD 4540

Unless otherwise stated, functional surface is media wetted area

AREA: [CoA]
[1000µm] / [6,2mg] / [H]
Escalation: [S]

Unless otherwise stated the following applies

ISO metric screw threads ISO 724	Edge Requirement STD4443
Tolerance class ISO-965-1 6H/6h	Welding STD ISO 3834-4
Surface Texture	Size Tolerances
	jsH

Surface Treatment: See note

Material	
Sort: See note	Blank / Dimension: See note
Class / Quality: See note	
Condition / References: See note	

Marking STD19	
Art: 1	Method MA2
Line(s) 1	Height 4-10
Trademark,type: 3156642	
Moreover	

Change	Zone	ECO Number	Change Description	3D	Date	Sign

Drawing methods STD12 | Tolerancing STD3162 | Prohibited and restricted substances CV1555

Projection Method	Scale	Introduced ECO Number	Classification STD3944	Regulated Parts STD4178
	1:2	752991	<C>;0 <M>;0	<L>;0

Designed	Design Checked	STD ch	Approved
Pettersson Marcus	sssttj sssrmj	sssopz	

Description: Coolant pipe dia 16

Status	Document ID	Rev
PR	3156642	1

Lifecycle Status	Date	Sheet
RELEASED	2023-06-09	1 (1)

N.B. The copyright and ownership of this drawing including associated computer data are and still remains ours. They must not be copied and/or brought to the knowledge of any third party without our prior permission. © SCANIA, Sweden.

SCANIA

3156642

A0

SV1106-00