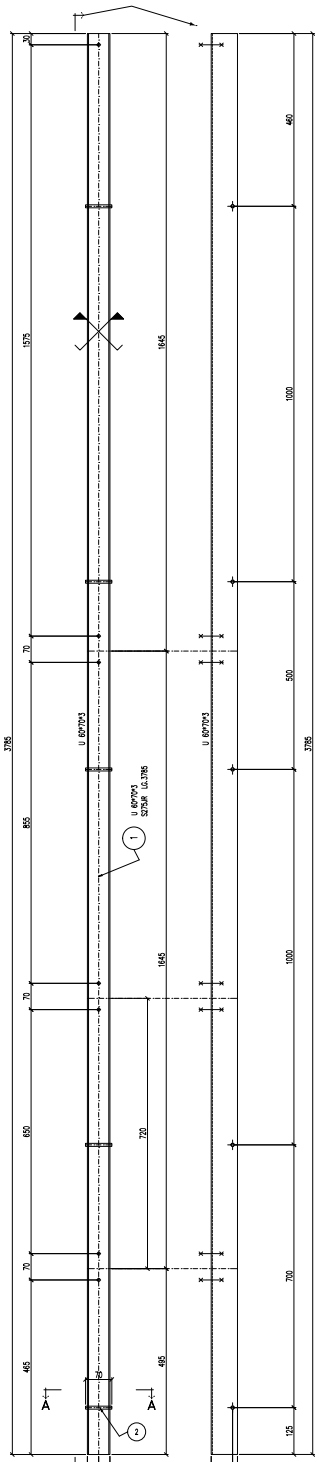

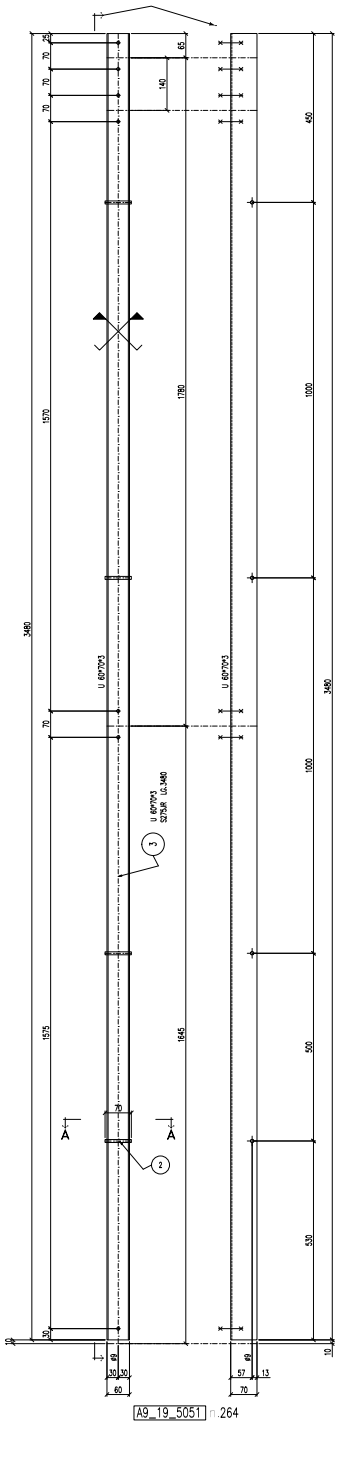

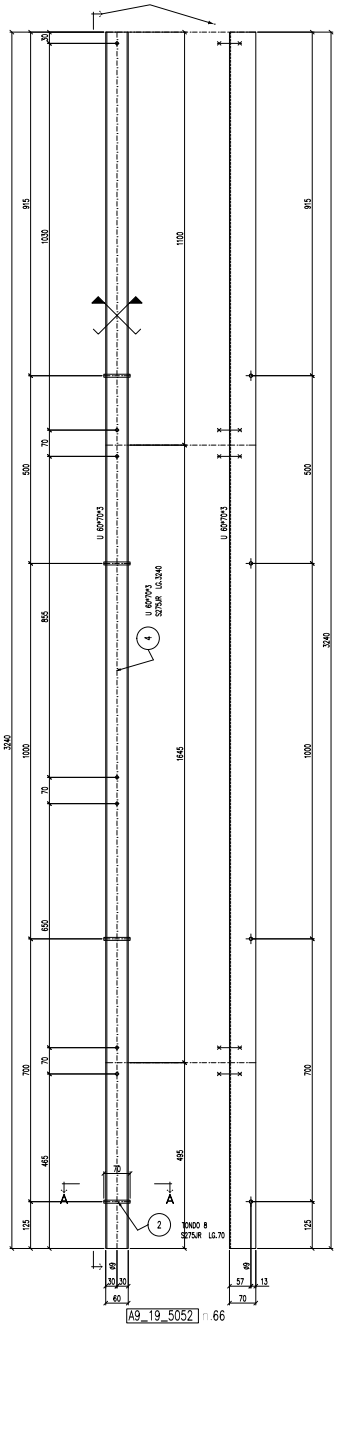

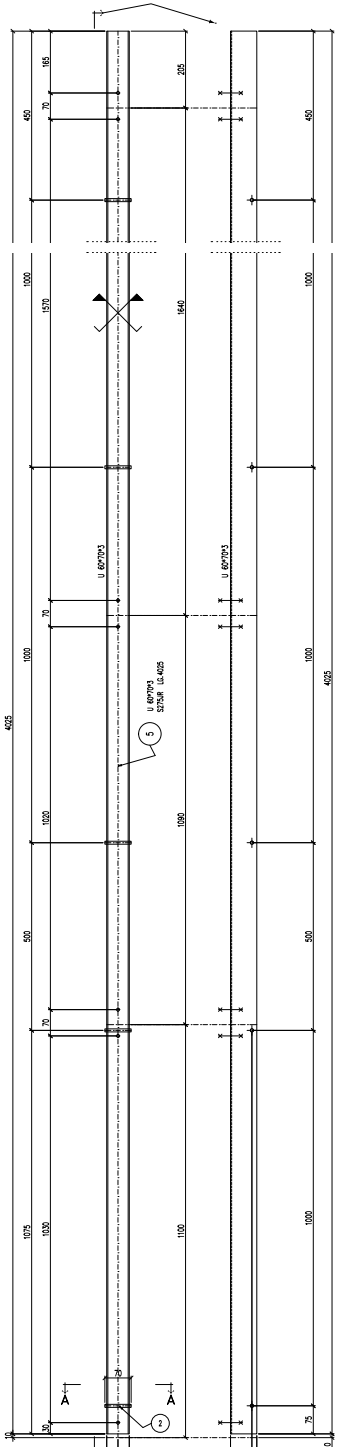

N.OF PC.S	DIMENSION	WIDTH	LENGTH	POS.	SHOP ASSEMBLY	N.POS. FOR MARK						Wt. in Kg. UNIT	Wt. in Kg. TOTAL	SUR.	MAT. GRADE	REFERENCE BILL OF GRADE
264	CANALA VERTICALE				A9_19_5050							17.1	4511.5	388.3		
264	CANALA VERTICALE				A9_19_5051							15.7	4143.5	356.7		
66	CANALA VERTICALE				A9_19_5052							14.6	965.0	83.1		
66	CANALA VERTICALE				A9_19_5053							18.2	1198.8	103.2		
						A9_19_5050	A9_19_5051	A9_19_5052	A9_19_5053							
264	U 60*70*3		3785.0	1		1						16.9	4475.0		S275JR	
2970	TONDO 8		70.0	2		5	4	4	5			0.0	83.0		S275JR	
264	U 60*70*3		3480.0	3			1					15.6	4114.0		S275JR	
66	U 60*70*3		3240.0	4				1				14.5	958.0		S275JR	
66	U 60*70*3		4025.0	5					1			18.0	1190.0		S275JR	
													10818.8	931.3		

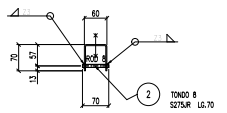

SECTION A-A

	Execution class	N.A.
ISSUED FOR CONSTRUCTION		
	Sign.	Date
UT		
RAs		
RSa		
RTs		
UQ		

REFERENCE FPC5BA-HX21-B920-D100, N.A.B RIVISTA

- MARKING
- EACH ITEM WELDED IN WORKSHOP (SUBMARK) IS IDENTIFIED WITH A CODE.

A9_19_1000 — PROGRESSIVE NUMBER

LOT ID NUMBER — SUB-ITEM'S REFERENCE

ELEVATION ±0.00 = +28.72m A.S.L.

00	26 MAR 2021	ISSUED FOR CONSTRUCTION			

SLAB YARD-HX21-WD-PH, 19

FLASHING ASSEMBLY DRAWING

LOT A9-MK: A9_19_5050 TO A9_19_5053

Scale 1:5

FPC5BA-HX21-B919-XD203

00

Sheet 001

FPC5BA-HX21-B919-XD203_00.dwg