GENERAL TOLERANCES
Angular dimension +-1° - Roundness range of tolerance from IT4 to IT11. Must be contained within half of dimensional tolerance.
MACHINED holes H14 shafts h14 linear values Js14 -- ROUGH holes H16 shafts h16 linear values Js16
SHEETS cutting/laser cutting/punching Js13 holes H13 bending/pressing Js14 -- ALUMINIUM DIE CASTING Savio Norm 4011_1005_00
PLASTIC MATERIALS according to DIN 16901 -- CAST IRON Savio Norm 4011_1003_00
The general tolerances for ROUGH of plastic (DIN 16901) of aluminium (4011_1005_00), of CAST IRON (4011_1003_00), must be intended H for holes, h for shafts, Js for all the other dimensions

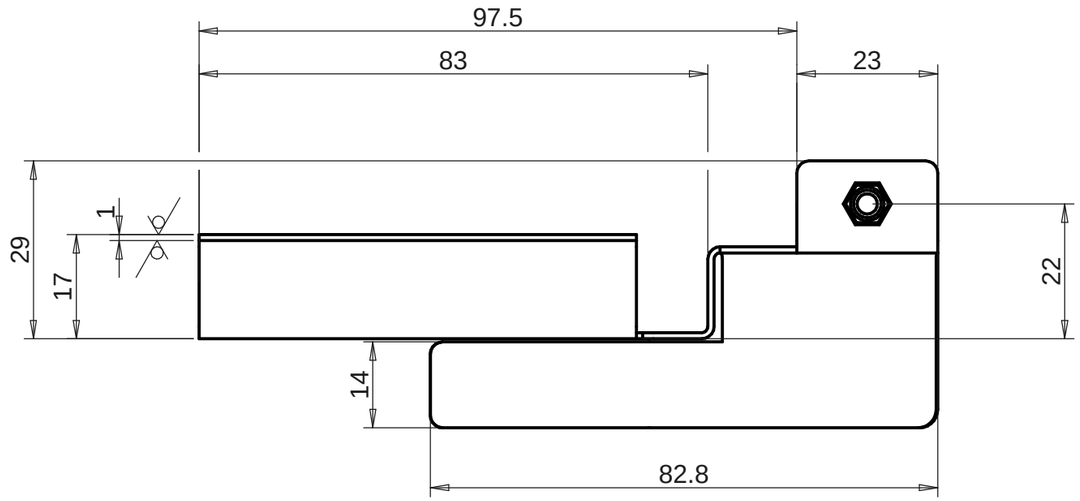

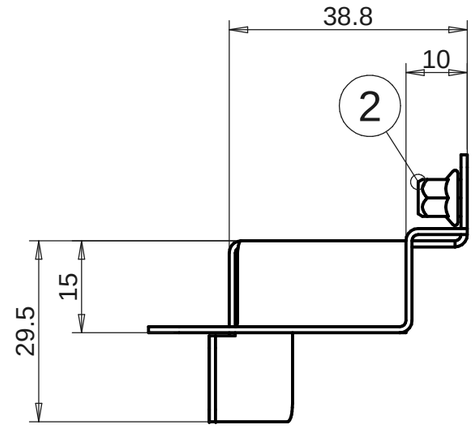

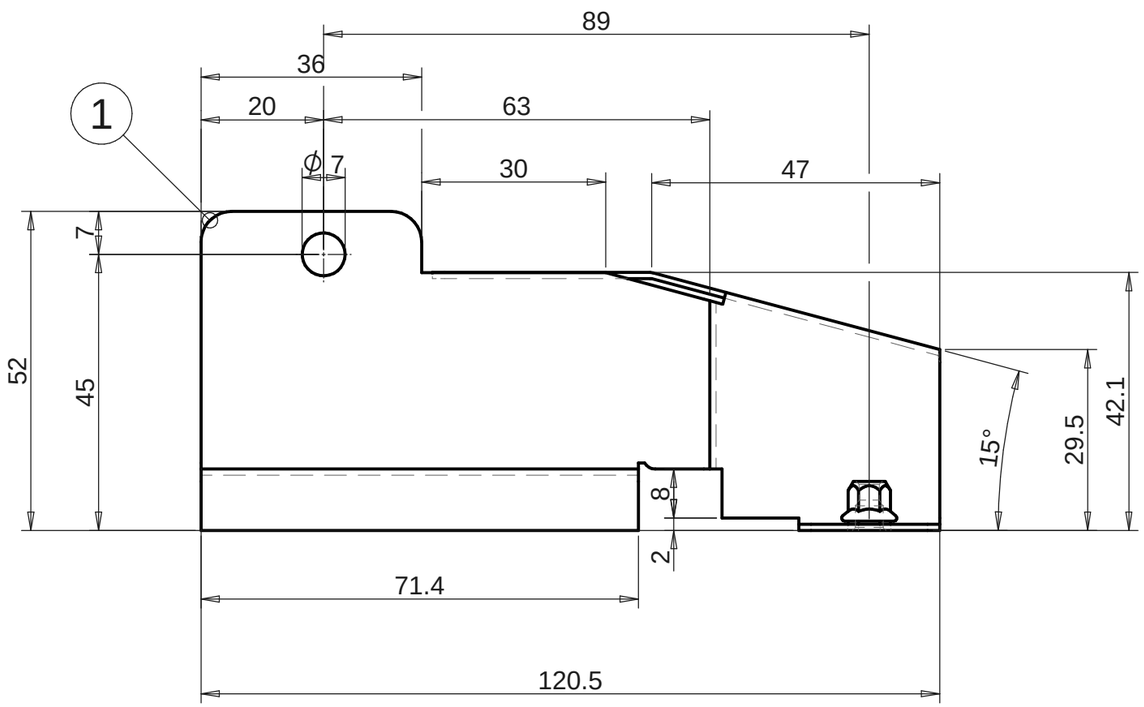

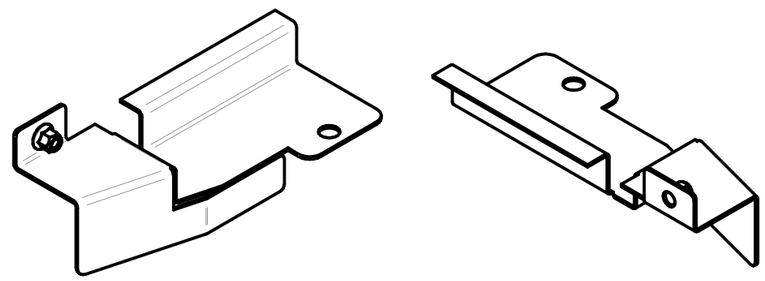

6.3 ESENTE DA BAVE / BUURS FREE

POS.	Code	Q.ty	Raw Material	Material Description	Techical Description
2	4026_6102_52	1		FE/ZN8C1A UNI 10447 A1 M4 8	
1	053675.0.A	1	4032_6002_99	S235J2G3 +N UNI EN 10025	

CN06151		04/10/2022	00
Change	Modification details:	Date Mod:	IRP

Approved

Changes to previous release:		Obtain from:	Substitute:
Material:		Code:	
Supply state:		Dimensions:	
Thermic treat.:		Hardness(T):	
Surface treat.:	Cataphoresis epoxy graphite black RAL9011 4010-0003-00	Hardness(S):	

DENOMINATION: PIASTRINA ECONOMIZZATORE

SAVIO	Draw.: Michele Simonatto	Date: 03/10/2022	053675.0.0
	Mod. : Michele Simonatto	Sheet N°: 1/1	
	App. : Stefano Malfante	Scale: 1:1	PLATE

Reserved property of SAVIO MACCHINE TESSILI S.p.A. In accordance with the law, the contents of this drawing may not be re-produced or communicated to third parties.