GENERAL TOLERANCES
Angular dimension +-1° - Roundness range of tolerance from IT4 to IT11. Must be contained within half of dimensional tolerance.
MACHINED holes H14 shafts h14 linear values Js14 -- ROUGH holes H16 shafts h16 linear values Js16
SHEETS cutting/laser cutting/punching Js13 holes H13 bending/pressing Js14 -- ALUMINIUM DIE CASTING Savio Norm 4011_1005_00
PLASTIC MATERIALS according to DIN 16901 -- CAST IRON Savio Norm 4011_1003_00
The general tolerances for ROUGH of plastic (DIN 16901) of aluminium (4011_1005_00), of CAST IRON (4011_1003_00), must be intended H for holes, h for shafts, Js for all the other dimensions

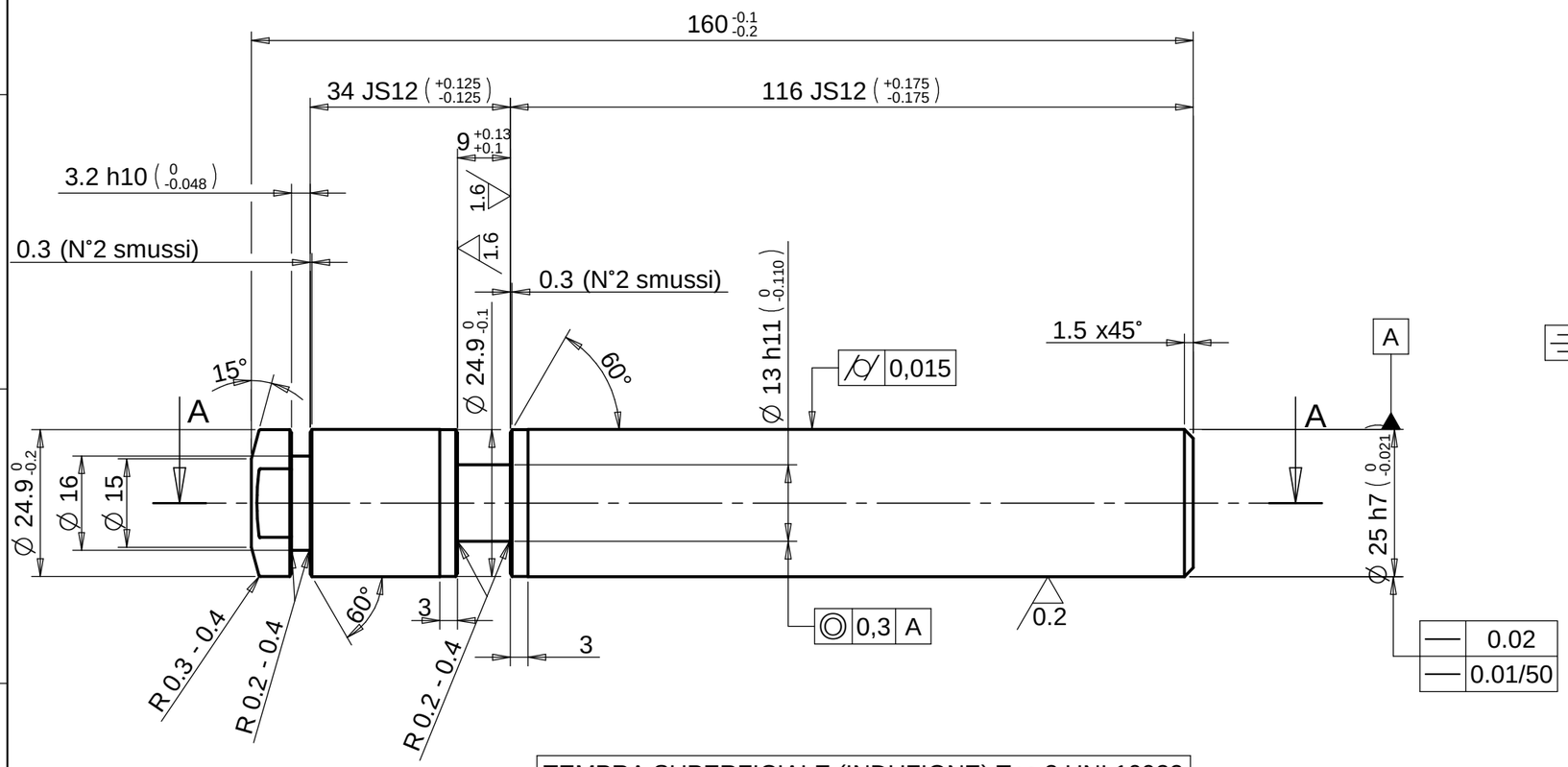

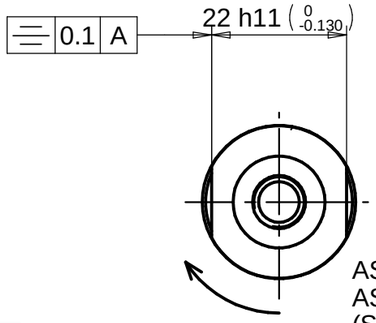

ASSE DI PARTENZA ROTAZIONE
ASSE PER TEMPRA AD INDUZIONE
(SOVRAPPOSIZIONE TEMPRA MAX 4 mm

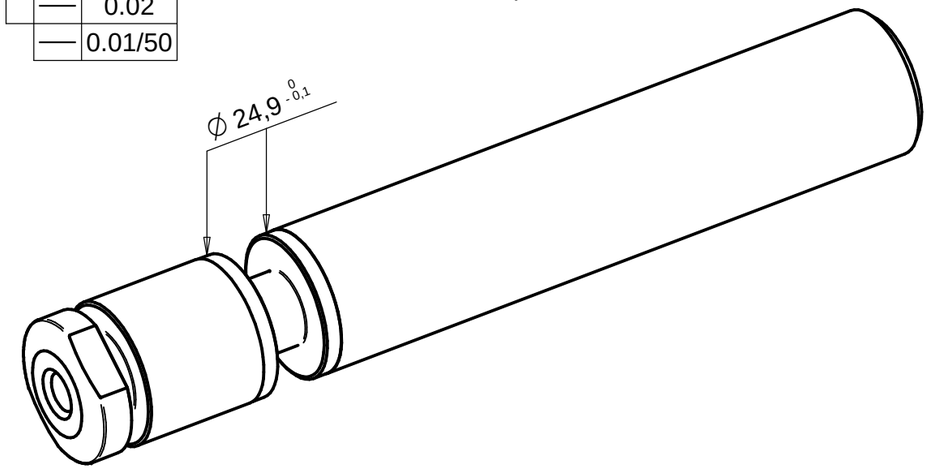

TEMPRA SUPERFICIALE (INDUZIONE) Tps 3 UNI 10932
Durezza HV 5/15 470 - 530 RINVENIMENTO A 180-200°C

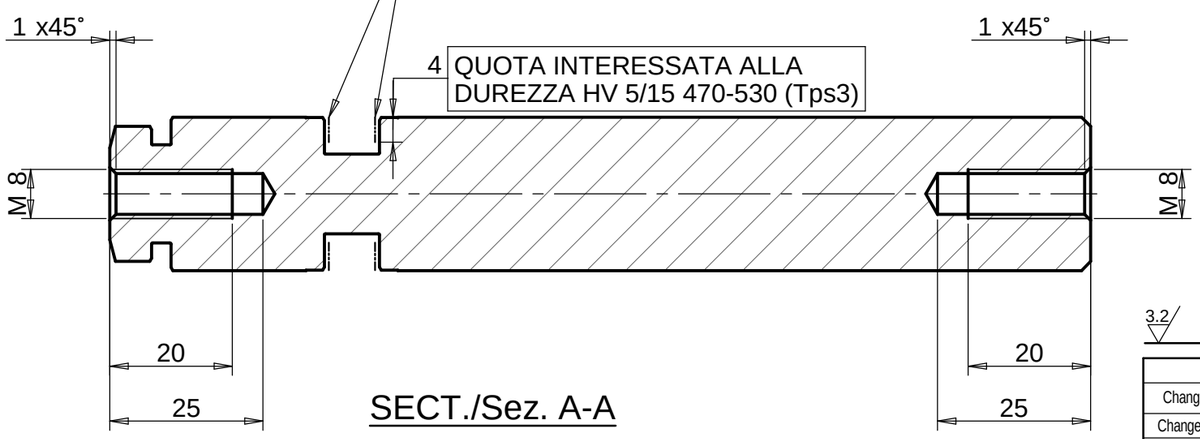

SECT./Sez. A-A

N.B. CROMATURA ESENTE DA CRICCHE DOPO TEMPRA INDUZIONE

3.2 (1.6 0.2)

ESENTE DA BAVE / FREE BURRS

	Mod.toll.circolarità in cilindricità	4
Change	Modification details:	IRP
Changes to previous release:		Substitute:
Material:	C45+SL UNI EN 10277-2 Rectified+Cr25	Code: [redacted]
Supply state:	SL: RECTIFIED +CR 25+/-5 MICRON	Dimensions: d=25 h7
Thermic treat.:		Hardness(T):
Surface treat.:	Mnph r 10 UNI ISO 9717	Hardness(S):

DENOMINATION: ASSE SUPPORTO BRACCIO POLAR CON SPOSTAMENTO ASSIALE

Savio	Draw.: Rodolfo Gobbo	Date: 23/04/2015	003525.0.0
	App. : Stefano Malfante	Sheet N°: 1/1	
		Scale: 1:1	SHAFT

Reserved property of SAVIO MACCHINE TESSILI S.p.A. In accordance with the law, the contents of this drawing may not be re-produced or communicated to third parties.