A	B	C	D

GENERAL TOLERANCES
Angular dimension +-1° - Roundness range of tolerance from IT4 to IT11. Must be contained within half of dimensional tolerance.
MACHINED holes H14 shafts h14 linear values Js14 -- ROUGH holes H16 shafts h16 linear values Js16
SHEETS cutting/laser cutting/punching Js13 holes H13 bending/pressing Js14 -- ALUMINIUM DIE CASTING Savio Norm 4011_1005_00
PLASTIC MATERIALS according to DIN 16901 -- CAST IRON Savio Norm 4011_1003_00
The general tolerances for ROUGH of plastic (DIN 16901) of aluminium (4011_1005_00), of CAST IRON (4011_1003_00), must be intended H for holes, h for shafts, Js for all the other dimensions

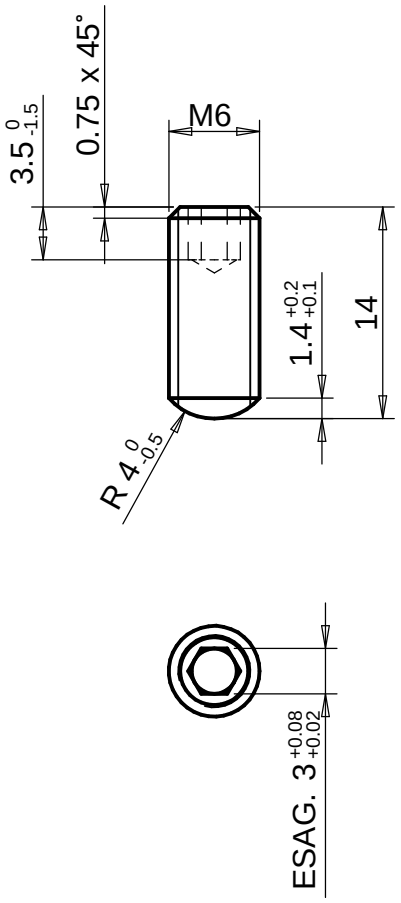

3,2

CN00013	Modificato materiale	5
Change	Modification details:	IRP

Changes to previous release: | Substitute:

Material:	C40E+SH UNI EN 10277-5	Code:	4032_2069_99
Supply state:	+SH: PEELED ROLLED	Dimensions:	D=6 h11
Thermic treat.:		Hardness(T):	
Surface treat.:	Fe/Zn8c1A UNI ISO 2081 free Cr VI	Hardness(S):	

DENOMINATION: GRANO

Savio	Draw.: Stefano Malfante	Date: 29/10/2014	16720_0356_0_0
	App. : Stefano Malfante	Sheet N°: 1/1	
		Scale: 2:1	SPECIAL SCREW

Reserved property of SAVIO MACCHINE TESSILI S.p.A. In accordance with the law, the contents of this drawing may not be re-produced or communicated to third parties.