GENERAL TOLERANCES
Angular dimension +-1° - Roundness range of tolerance from IT4 to IT11. Must be contained within half of dimensional tolerance.
MACHINED holes H14 shafts h14 linear values Js14 -- ROUGH holes H16 shafts h16 linear values Js16
SHEETS cutting/laser cutting/punching Js13 holes H13 bending/pressing Js14 -- ALUMINIUM DIE CASTING Norm 4011_1005_00
PLASTIC MATERIALS according to DIN 16901 -- CAST IRON Norm 4011_1003_00
The general tolerances for ROUGH of plastic (DIN 16901) of aluminium (4011_1005_00), of CAST IRON (4011_1003_00), must be intended H for holes, h for shafts, Js for all the other dimensions

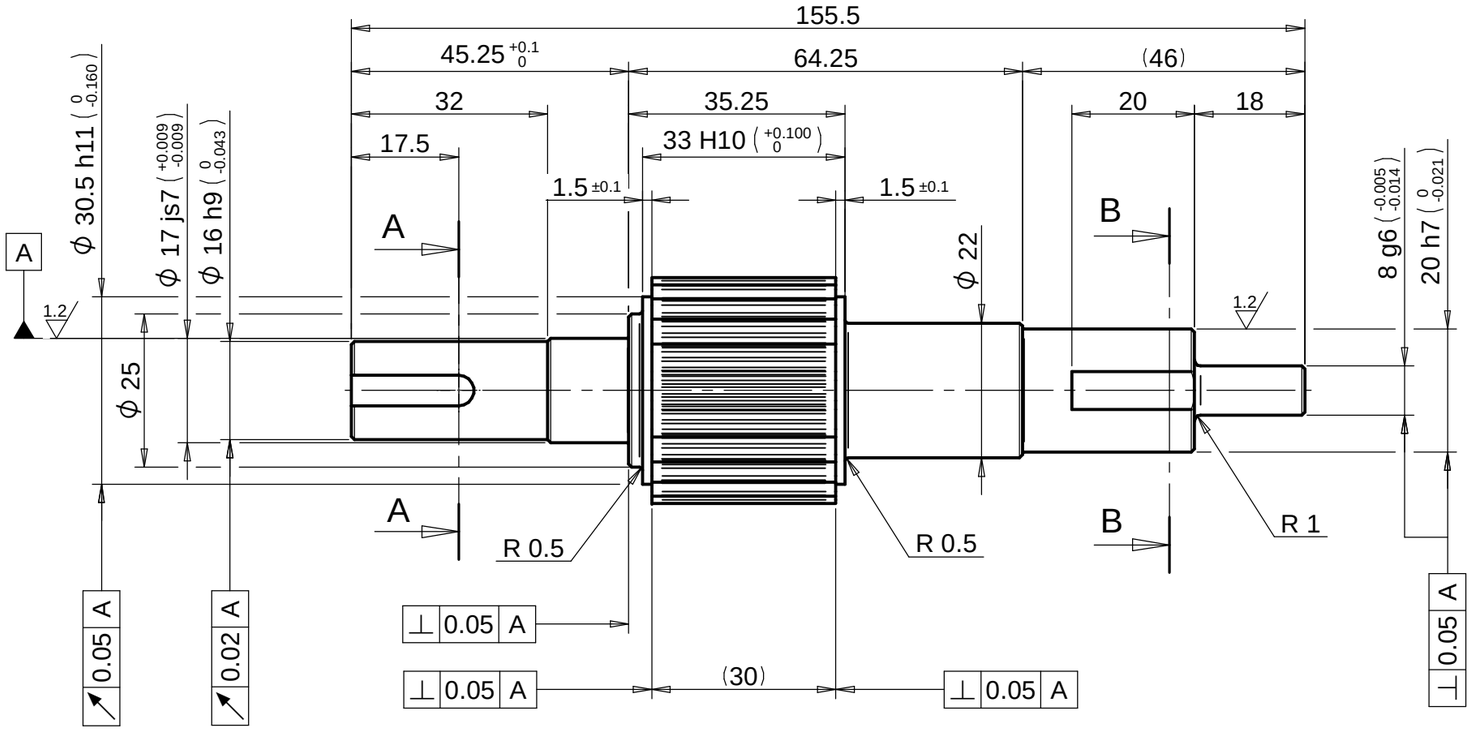

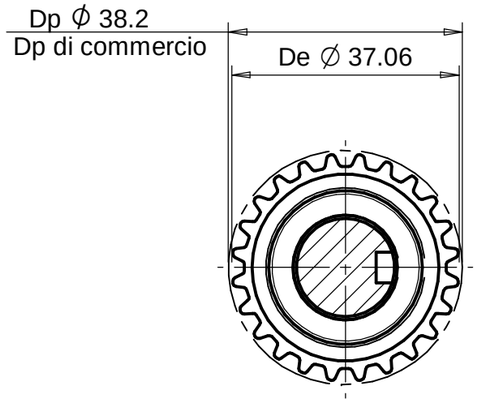

Profilo Dentatura RPP5 Z 24

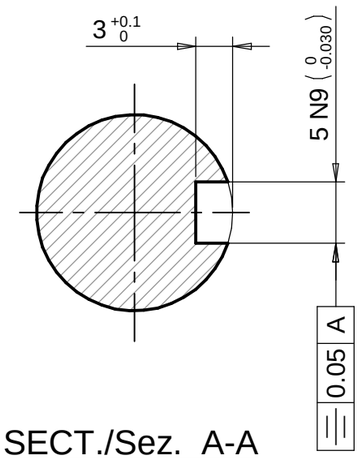

SECT./Sez. A-A
SCALE/Scala: 2:1

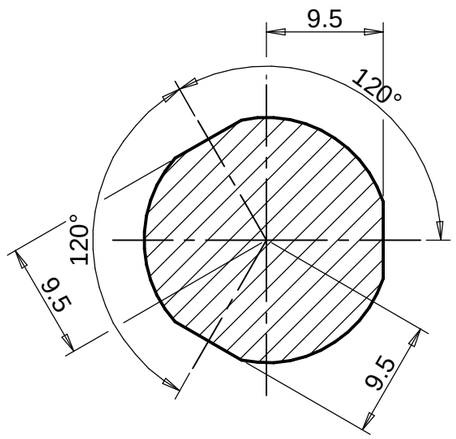

SECT./Sez. B-B
SCALE/Scala: 2:1

1.6 (1.2)

- FREE OF BURRS AND EDGES/Esente da bave e spigoli vivi
- UNDIMENSIONED CHAMFER /Smussi non quotati: 0.5x45°
- UNDIMENSIONED RADIUS /Raggi non quotati: R 0.2

CN06892	GRAPHIC UPDATE	07/09/2023	02
Change	Modification details ☐:	Date Mod:	IRP
Changes to previous release △:		Obtain from:	Substitute:
Material:	34CrNiMo6+QT+C UNI EN 10277-5	Code:	4032_2110_99
Supply state:	+QT+'C': QUENCHED TEMPERED + COLD DRAWN	Dimensions:	
Thermic treat.:		Hardness(T):	
Surface treat.:	Mnph r 10 UNI ISO 9717	Hardness(S):	
Weigth:	0.5 kg	Volume:	0 m^3

Approved

DENOMINATION: FIRST-AXIS DRIVE PULLEY LYBRA

Draw.:	Date: 29/09/2020	039784.0.0	
Mod. :	Sheet N°: 1/1		
App. :	Scale: 1:1	PULLEY	