KLIPPAN	CAD					
REV	DATE	PLAC	DESIGN CHANGE LEGEND: T=ADDED U=DELETED V=WAS	DRAWN	CHECK	APPR
1	210903	A1	General update	JVN	ANA	DRN

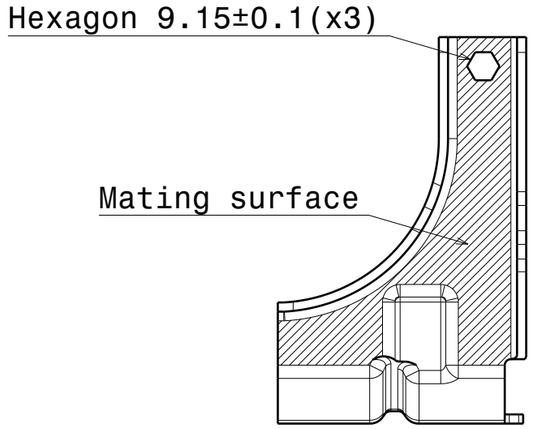

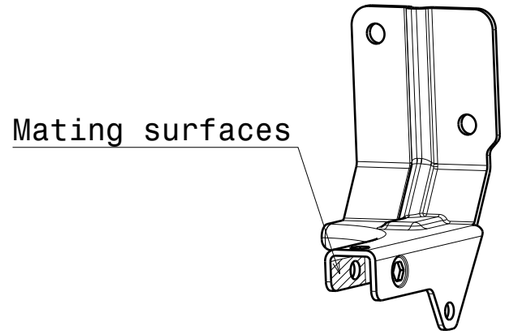

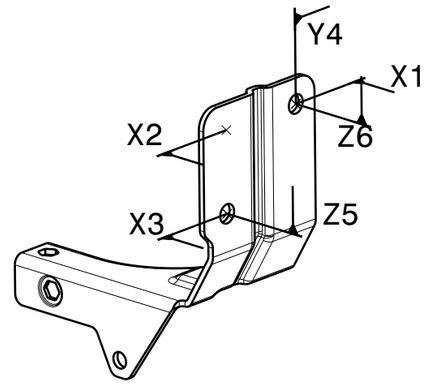

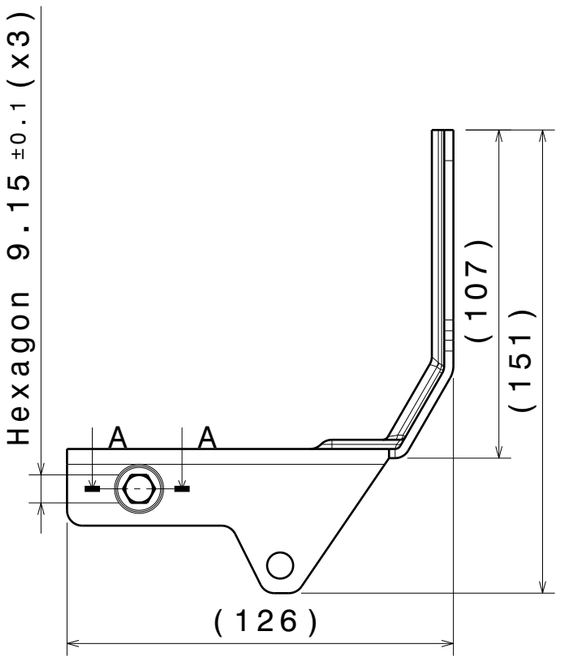

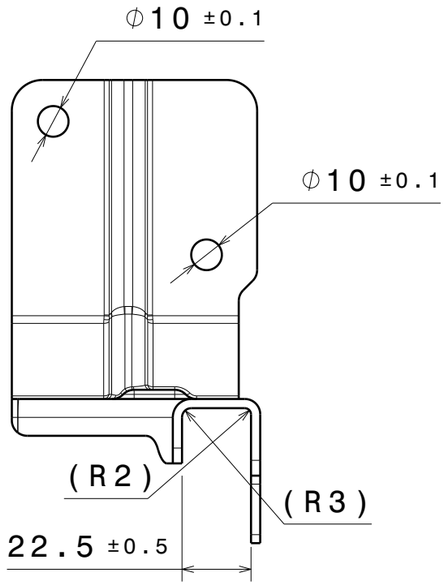

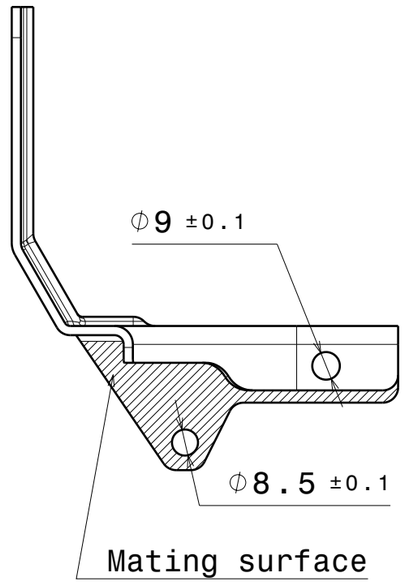

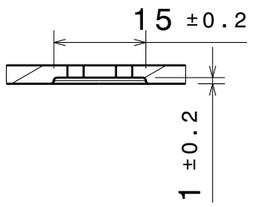

A-A
Scale: 1:1

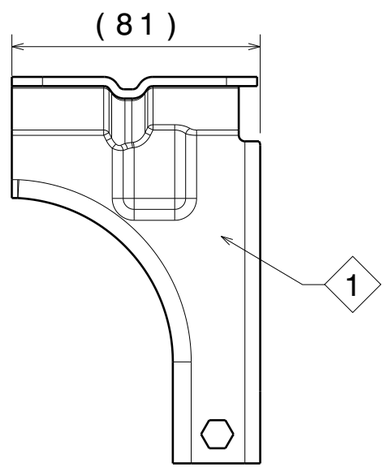

- General geometric tolerances
  - Mating surface ⌓ 1 X Y Z
  - Other surface ⌓ 3 X Y Z
  - Holes ⌖ ⌀1 X Y Z
  - Cut edges ⌒ 1.5 X Y Z
- Tolerances refers to coated part
- Surface treatment: CDP M3078-2
- Corrosion protection acc to: M3018-2-G
- Marking: Font: Arial, Height: 8
  Part nr XXX
- Material thickness: 3 mm
- Max burrs +0.3mm
- Where dimensions are excluded refer to 3D model
- Product Characteristics Classification:
  (CC) Critical Characteristics
  (SC) Significant Characteristics

1

Master Location Points			
REF.	X	Y	Z
X1	2238.5	-341.5	645.5
X2	2238.5	-391.5	645.5
X3	2238.5	-391.5	602
Y4	2238.5	-341.5	645.5
Z5	2238.5	-391.5	602
Z6	2238.5	-341.5	645.5

KLIPPAN SAFETY AB
Due to national law of Copyright this work is protected against any kind of use without permission from KLIPPAN SAFETY AB

KLIPPAN SAFETY AB

MATERIAL	EN 10149-2 S420MC (1.0980)
SURFACE	SEE NOTE
TITLE	Rear_wall_bracket_LHS
WEIGHT	455g
GENERAL TOLERANCE	-
SHEET	1/1
SCALE	1:2
	A3/C
EO	-
DRAWN	JVN
DATE	210818
DRAWING NO.	Rear_wall_bracket_LHS_S_G2
REF.DRW	
PHASE	B
REV	1

FRAME A3

201-08