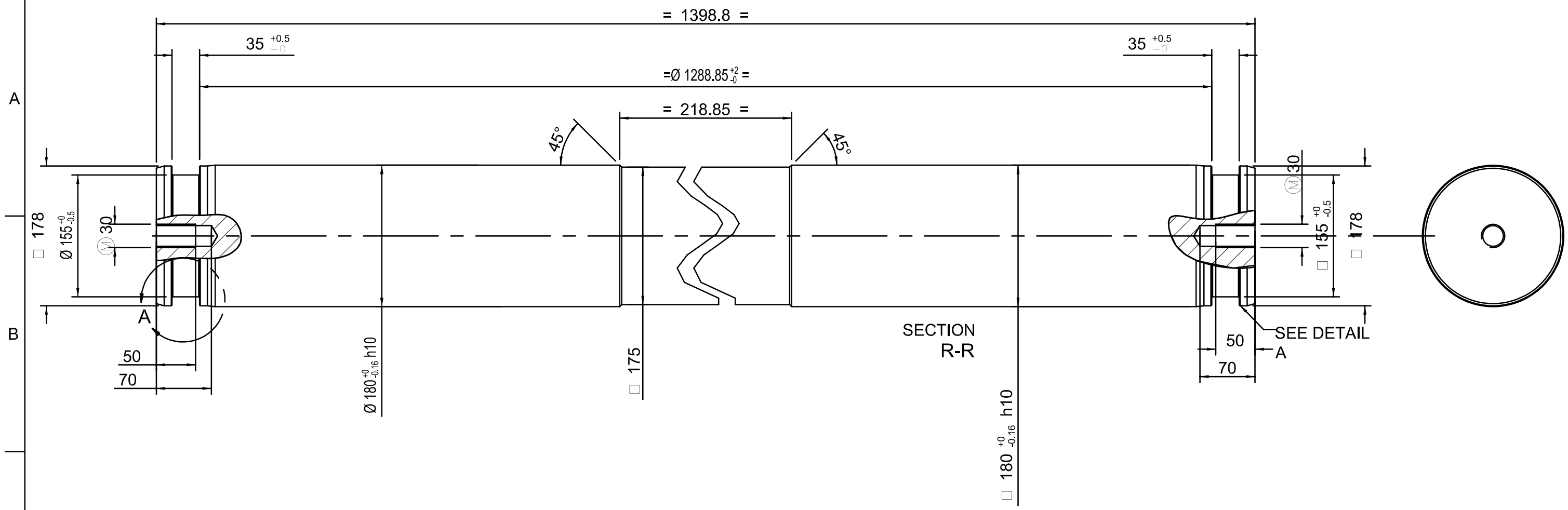

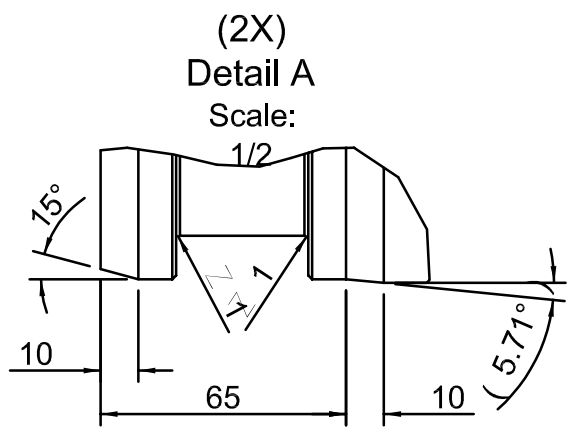

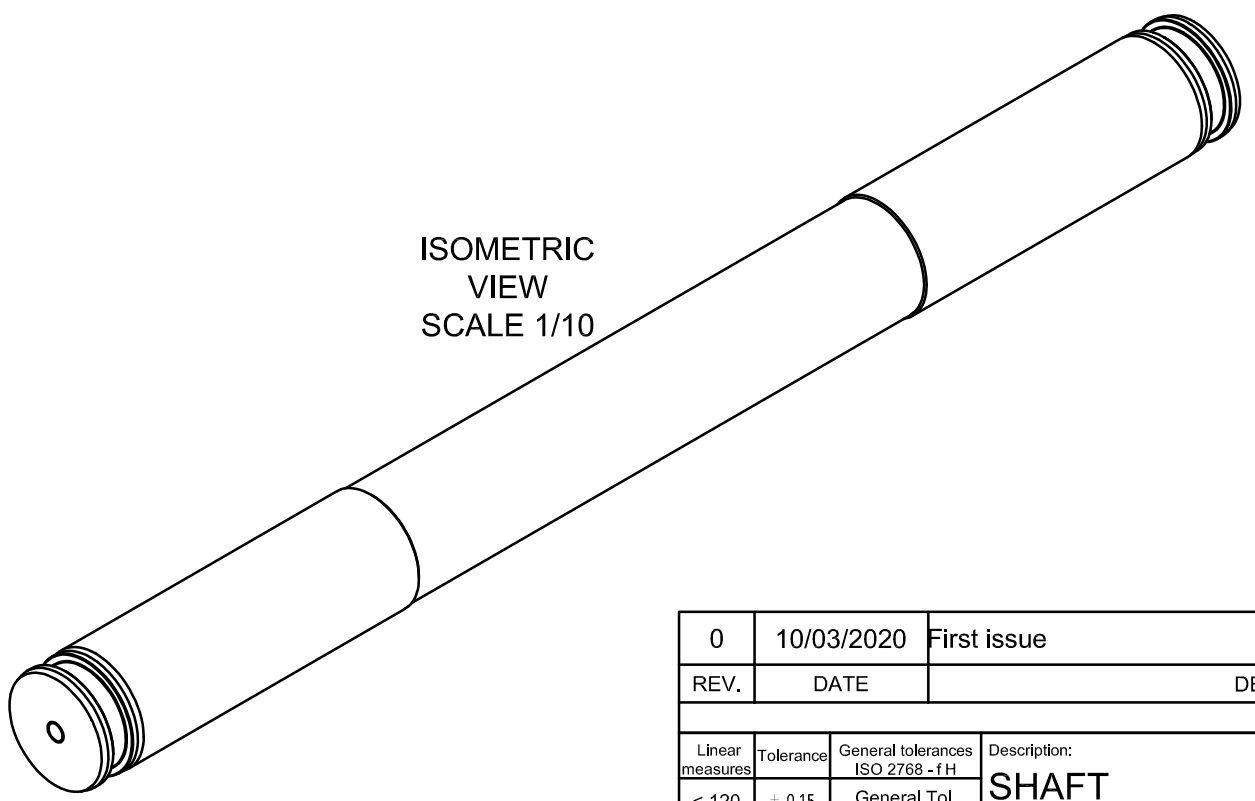

3.2

REV.	DATE	DESCRIPTION	DRAWN BY	CHECKED BY	APPROVED BY
0	10/03/2020	First issue	S.I.D.B.P.	F.F.	N.S.

REVISIONS

Linear measures	Tolerance
< 120	± 0.15
≥ 120 < 400	± 0.2
≥ 400 < 1000	± 0.3
≥ 1000 < 2000	± 0.5
≥ 2000 < 4000	± 1
≥ 4000	± 1.5

General tolerances ISO 2768 - f H

General Tol.
Angles
Rough part ± 1
Mach. part ± 0.5

dim
dim da verif.

Description: SHAFT

Material: 39NiCrMo3

Treat: Fosfataz. allo zinco UNI ISO 9717

Weight: 411.6 kg

Scale: 1/5

Sheet: 1 of 1

Part No: PB36481004
Drw No:

PB36481004

A3