NOTES: UNLESS OTHERWISE SPECIFIED:
1. ALL DIMENSIONS APPLY AFTER FINISH.
2. REMOVE ALL BURRS.
3. CLEAN ALL PARTICULATE AND PACKAGE TO PREVENT CORROSION AND DAMAGE.
4. ALTERNATE MATERIAL: 40CrMo, 40CrMnMo, 20#, 20CrMo, 20CrMnMo. NOTE HARDNESS REQUIREMENT IN TITLE BLOCK.
5. MATERIAL 20#, 20CrMo REQUIRES CARBON NITRIDE TO HRC 58-63, TO A DEPTH OF 0.3 TO 0.8.

6 FINISH: PPG 6000 ELECTROPHORESIS; BLACK

7 ALTERNATE FINISHES:
A) BLACK OXIDE WITH OIL AFTER FINISH.
B) ZINC PLATE PER ASTM B633, SC3, TYPE II, Fe/Zn12, BLACK ZINC. APPLY APPROPRIATE PRE-AND POST-PLATING HEAT TREAT TO PREVENT HYDROGEN EMBRITTLEMENT.
8. CLASS B SURFACE PER FTI_ES02. REQUIRES SALT SPRAY EXPOSURE PER ASTM B117-73, 96 HOURS COATED COMPONENTS ARE EVALUATED IN ACCORDANCE WITH ASTM D610, FERROUS (RED) CORROSION, GRADE 8.
9. BAG AND TAG WITH PART NUMBER AND REVISION; N3XX-0162-00 RE.

10 ROTATIONAL TIMING BETWEEN SPLINE TEETH (SECTION B-B) AND PAWL POCKETS (DETAIL A) NOT REQUIRED.

11 DIMENSION TO THEORETICAL INTERSECTION.

12 LARGER HOLES INDICATE PAWL POSITION.

13 SMALLER HOLES INDICATE SPRING POSITION.

TABLE OF REVISIONS

DISPOSITION CODES: S = SCRAP, DU = USE UNTIL, R= RE-WORK NA= NOT APPLICABLE

DISP	CCR#	ITEM	ZONE	DESCRIPTION	BY	DATE	CHECKED	DATE
	0717			RELEASE FOR QUOTING PURPOSES ONLY	WJE	07/28/16	DG	07/28/16
	0759			INITIAL PRODUCTION RELEASE	EPS	12/7/16	WJE	11/10/16
	0785			ADDED NOTE "NO FINISH..." TO SECTION A-A	EPS	01/12/17	CJR	01/11/17
	0888	C.1 C.2	S1-F8 ALL	REVISED NOTE 4, ADDED 20CrMnMo MATERIAL REMOVED DATUM B FROM MOST GTOL CALLOUTS	JLS	06/15/17	CJR	06/12/17
	1013	D.1	ALL	REMOVED NOTE 14 AND NOTE 14 TAGS	JLS	02/28/18	FW	02/21/18
UU	1117	E1	IC5	REVISED ANGLE, WAS: 7°	BBS	20191211	KLK	20191211

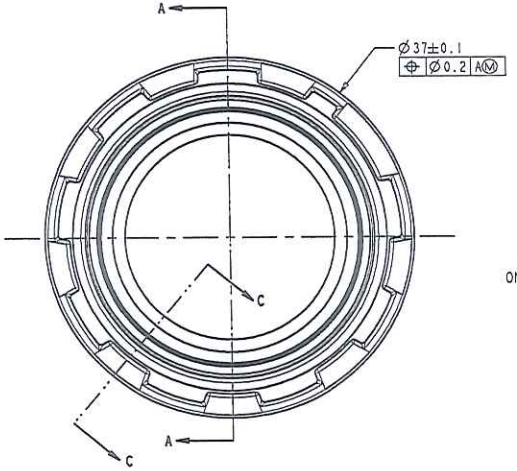

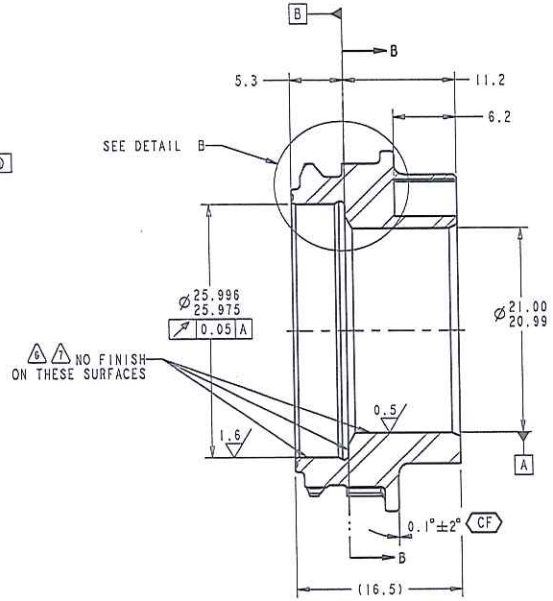

SECTION A-A

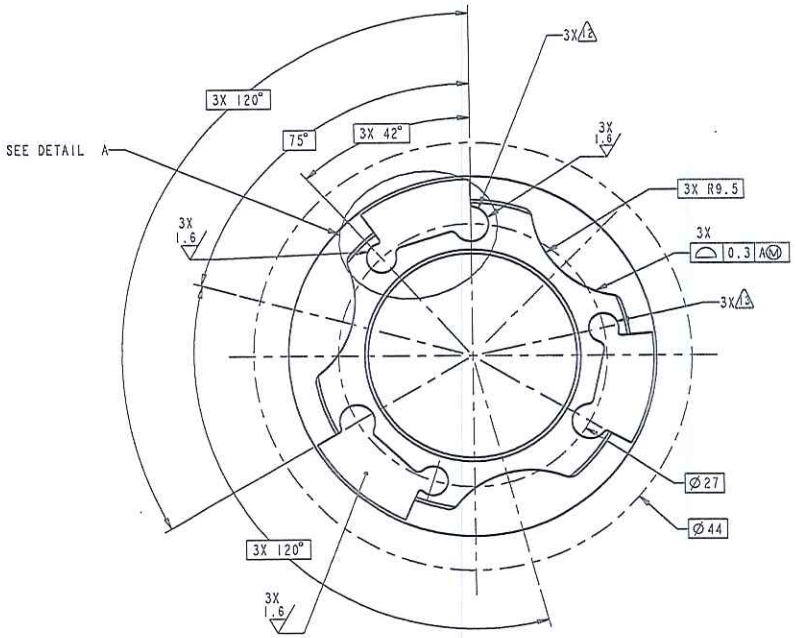

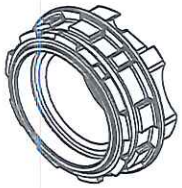

SCALE 2

SCALE 2

PROPRIETARY AND CONFIDENTIAL

THIRD ANGLE PROJECTION

DO NOT SCALE DRAWING

	NAME	DATE
DRAWN	W ELLIOTT	07/18/16
CHECKED	D GALVIN	07/28/16
ENG APPR.	W ELLIOTT	07/29/16
MFG APPR.	H HOUSE	07/28/16
Q.A.	S PRICE	07/29/16

UNLESS OTHERWISE SPECIFIED

INTERPRET GEOMETRIC TOLERANCING PER: ASME Y14.5-2009

INTERPRET ABBREVIATIONS AND ACRONYMS PER: ASME Y14.38-2007

DIMENSIONS ARE IN MM
DIMENSIONS IN [ ] ARE IN INCHES

BREAK ALL SHARP EDGES 0.13-0.41
RADIUS INSIDE CORNERS R 0.41 MAX

SURFACE TEXTURE - 3.2 µm MAX

TOLERANCES:
LINEAR ±0.15 ANGLES ±1.0

REL/VER STATUS: Released - 2

MATERIAL:
SAE-4140
HRC 32-60

FINISH: 6 7

WEIGHT: 0.046 KG

MODEL NAME: N3XX-0162-00

DESCRIPTION:
FREEWHEEL, INPUT

SIZE	DRAWING NUMBER	REV
D	N3XX-0162-00	E

SCALE: 4.000 SHEET 1 OF 2