Version	No. Änz.	C.-K.-No. Antrags-Nr.	Change Aenderung	Generated Erstellt	Release date Freigabedatum	Released Freigegeben
A	-	-	drawing created;	KLP	2021-12-01	LAN

Section view B-B

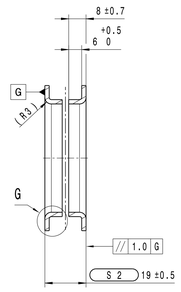

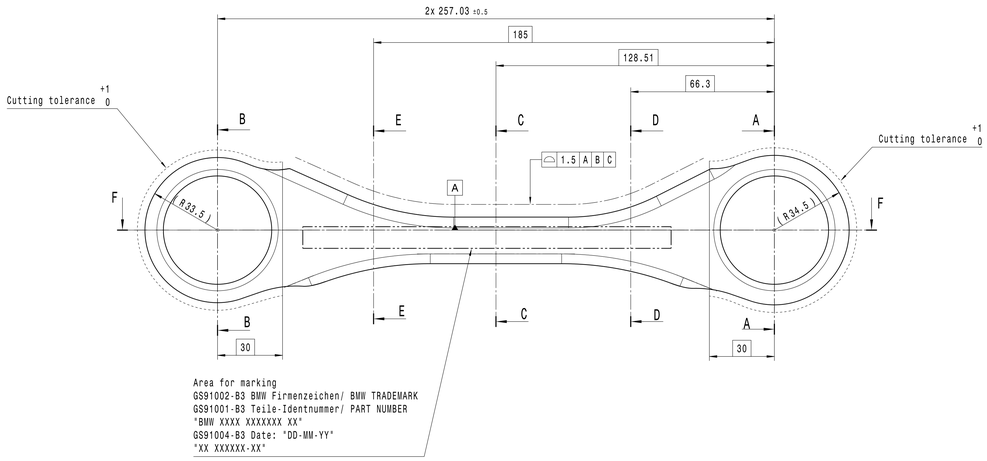

Section view A-A

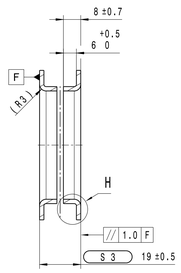

Detail G
5:1

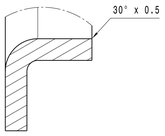

Section cut E-E

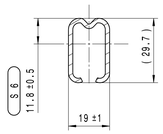

Section cut C-C

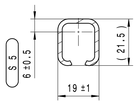

Section cut D-D

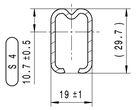

Detail H
5:1

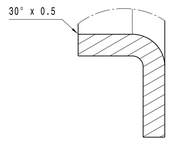

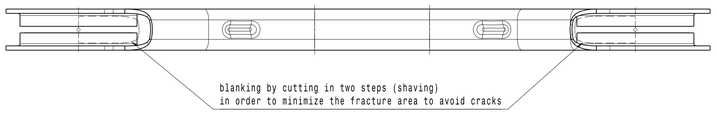

rolling direction tbd.

measuring instruction:
clamping on lock dimension
dimension are valid in clamped and painted condition

any change of manufacturing process or location is subject to prior approval by department of release

testing of quality characteristic is done at room temperature, if not otherwise specified

DKTL as per GS 90011 LA SW3

Layer thickness 35µ to 50 µm

contact points from painting rack in bearing holes are permissible

edge optimized painting must be provided

alignment A|B|C

tolerances unless otherwise stated

surfaces ⌓ 2 A B C

line tolerance ⌒ 2 A B C

position tolerance ⌖ ⌀2 A B C

minimum thickness 80% from initial wall thickness

permissible burr acc to ISO 13715

general tolerances acc to nach BMW GS 90013

local neckings or cracks not allowed

crack test acc to LMN 738, LMN 791 and LMN 791-7

Section view F-F

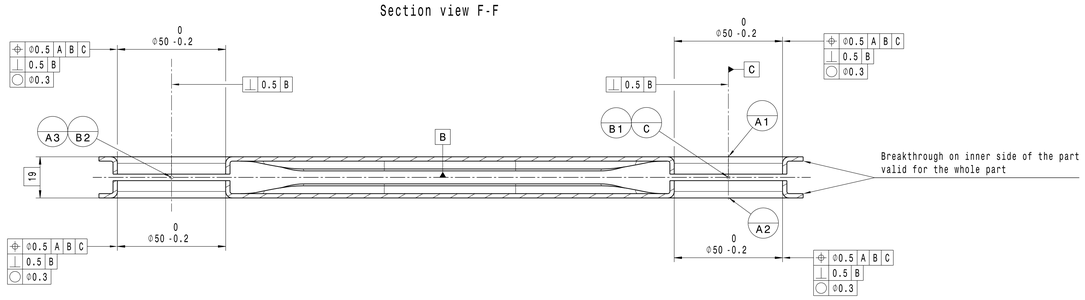

Isometric view
Scale: 1:2

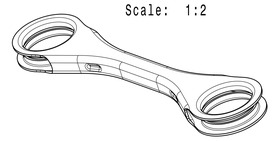

C1 material/Werkstoff:
CR570Y780T-CP + GI110/110 U VDA239-100
t=2.0 ± 0.07

S1 Rp0.2 570 To/bis 720 MPa
Rm 780 to/bis 920 MPa

Correlation of 2D- and 3D-documents Zuordnung von 2D- und 3D-Dokumenten	2D 3D	Version A A
Material no. / Material Nr.		Version
000 760 849 006		01

Material / Werkstoff: see drawing	Surface treatment / Oberflächenbehandlung: see drawing; Coated area / beschicht. Oberfl. A = - mm²	Calculated mass Berechnete Masse 401.7 g
Toleranzangaben / Tolerances data: ISO 2768-mK, ISO 1101, ISO 8015	Fremddokumenten-Nr. / External document-no.	Massstab Scale 1:1
Erstellt Generated	Entstanden aus Dokument Developed from document: 000 760 443 006	Format Size A0
Technical conditions for delivery Technische Lieferbedingung: LMN 726, LMN 738, LMN 791, LMN 791-7	Verantwortlich Responsible	
Maße in mm Dimensions in mm	Benennung / Designation: CONTROL ARM HOUSING LENKERGEHAEUSE	Blatt Sheet 1 von of 1
Schutzvermerk ISO 16016 beachten Refer to protection notice ISO 16016	Dokumenten-Nr. / Document-no.: 000 760 849 006	Version A
Special Characteristics acc. LMN 002 Besondere Merkmale nach LMN 002: C 1 S 6	Business Unit Chassis Components	

The english text is legally binding.
Der englische Text ist rechtsverbindlich.

For missing information refer to 3D data set.
Fehlende Angaben sind den 3D Modell zu entnehmen.