GENERAL TOLERANCES
Angular dimension +-1° - Roundness range of tolerance from IT4 to IT11. Must be contained within half of dimensional tolerance.
MACHINED holes H14 shafts h14 linear values Js14 -- ROUGH holes H16 shafts h16 linear values Js16
SHEETS cutting/laser cutting/punching Js13 holes H13 bending/pressing Js14 -- ALUMINIUM DIE CASTING Savio Norm 4011_1005_00
PLASTIC MATERIALS according to DIN 16901 -- CAST IRON Savio Norm 4011_1003_00
The general tolerances for ROUGH of plastic (DIN 16901) of aluminium (4011_1005_00), of CAST IRON (4011_1003_00), must be intended H for holes, h for shafts, Js for all the other dimensions

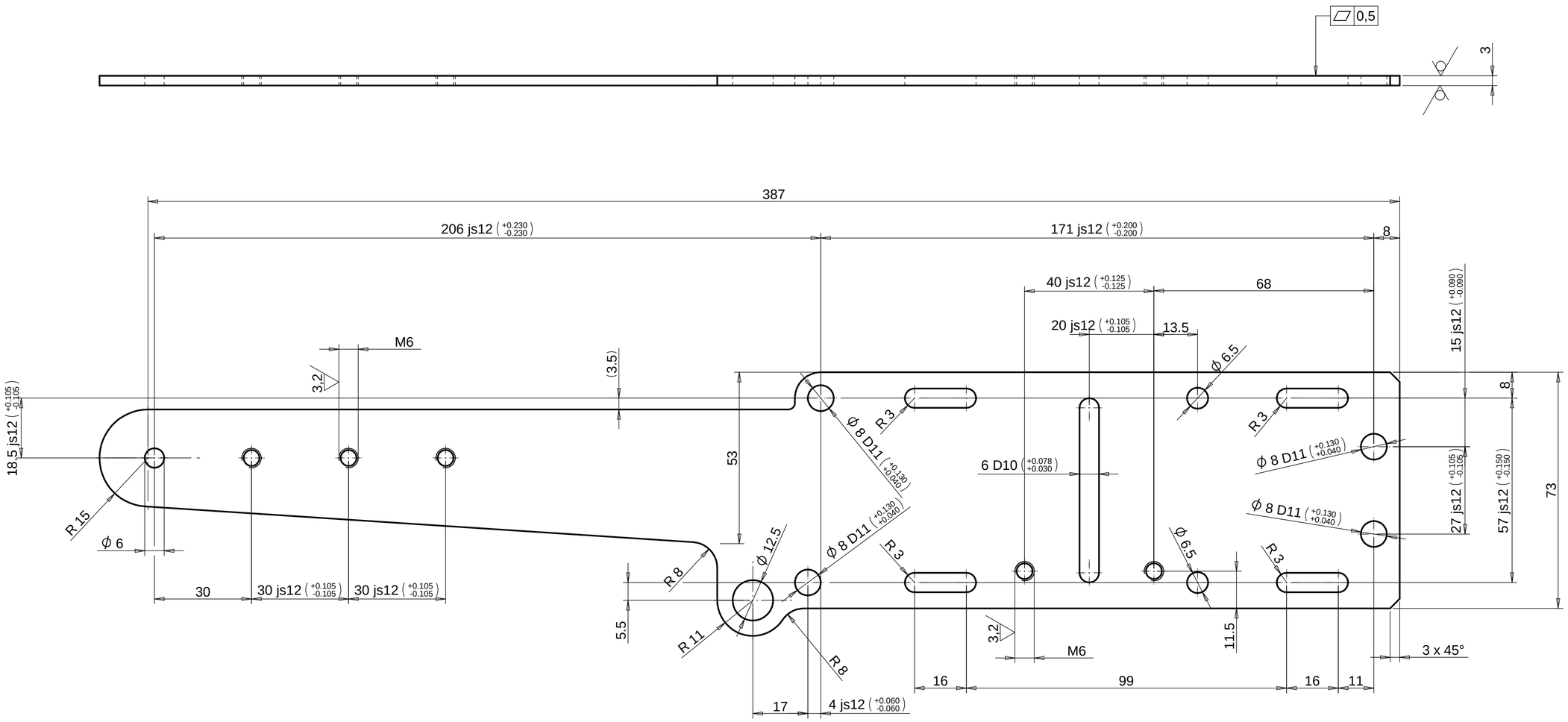

6,3 (3,2)

MAXIMUM BURR 0,04 / BAVA MAX 0,04
PROTEGGERE I FORI FILETTATI DALLA VERNICIATURA

CN00744			0
Change	Modification details:		IRP
Changes to previous release: AGG.FILETTO M6 ZONA C-4		Substitute: 16140_5142_1_0	
Material: Fe P01 MA RM UNI 5866		Code:	
Supply state:		Dimensions: 3.0x1250x2500	
Thermic treat.:		Hardness(T):	
Surface treat.: Fe/Zn 8÷12 A UNI ISO 2081 free Cr VI		Hardness(S):	

DENOMINATION: SUPPORTO

Savio	Draw.: Luca Guarda	Date: 05/02/2016	009331.0.0
	App. : Giuseppe Morini	Sheet N°: 1/1	
		Scale: 1:1	BRACKET

Reserved property of SAVIO MACCHINE TESSILI S.p.A. In accordance with the law, the contents of this drawing may not be re-produced or communicated to third parties.