GENERAL TOLERANCES	
Angular dimension +-1° - Roundness range of tolerance from IT4 to IT11. Must be contained within half of dimensional tolerance.	
MACHINED holes H14 shafts h14 linear values Js14 -- ROUGH holes H16 shafts h16 linear values Js16	
SHEETS cutting/laser cutting/punching Js13 holes H13 bending/pressing Js14 -- ALUMINIUM DIE CASTING Savio Norm 4011_1005_00	
PLASTIC MATERIALS according to DIN 16901 -- CAST IRON Savio Norm 4011_1003_00	
The general tolerances for ROUGH of plastic (DIN 16901) of aluminium (4011_1005_00), of CAST IRON (4011_1003_00), must be intended H for holes, h for shafts, Js for all the other dimensions	

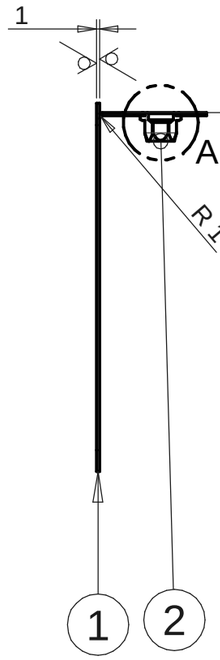

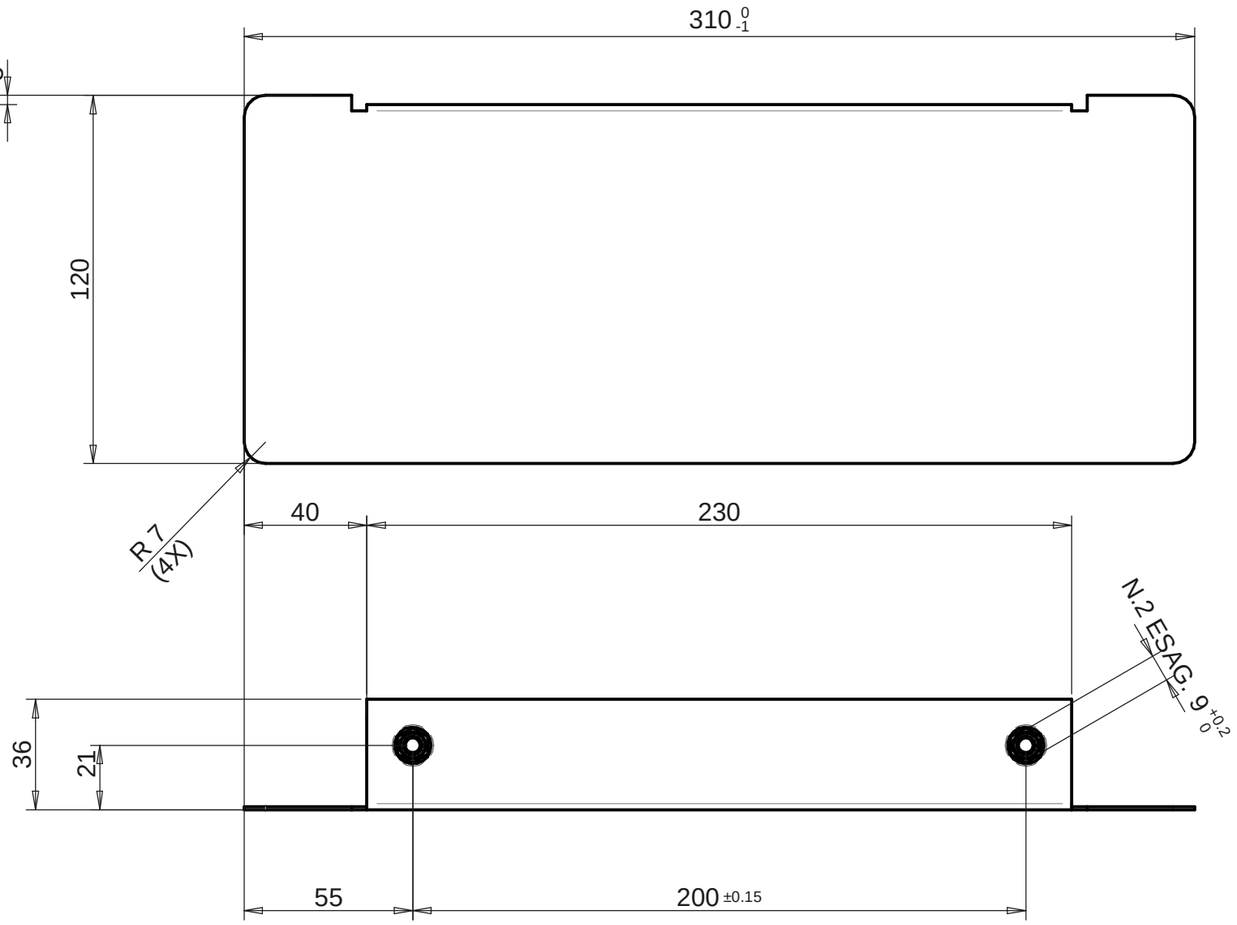

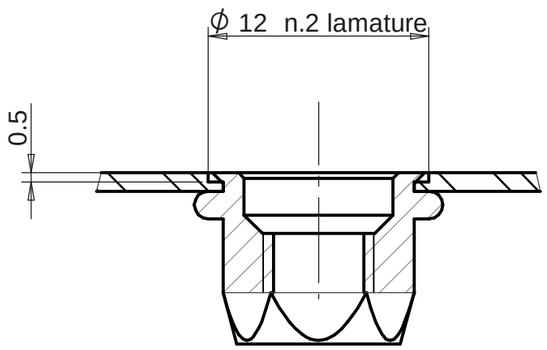

DET./Part. A

6.3 ( )

POS.	Code	Q.ty	Raw Material	Material Description	Techical Description
2	4026_6102_54	2		INSERTO UNI 10447A1 M6 8 Fe/Zn8c1A M6	T.ETFMM06 SPECIALINSERT M6
1	055847.0.A	1	4032_6152_99	DC01+A-G UNI EN 10130	

CN06527		17/02/2023	00
Change	Modification details:	Date Mod:	IRP

Changes to previous release:	Obtain from:	Substitute:
Material:	Code:	
Supply state:	Dimensions:	
Thermic treat.:	Hardness(T):	
Surface treat.: Fe/Zn 8÷12 A HP UNI ISO 2081 free Cr VI	Hardness(S):	
Weigth: 0.4 kg	Volume: 45089.94 mm^3	

DENOMINATION: COPERCHIO PEDANA LYBRA

SAVIO	Draw.: Ruggero Nicodemo	Date: 17/02/2023	055847.0.0
	Mod. : Ruggero Nicodemo	Sheet N°: 1/1	
	App. : Ruggero Nicodemo	Scale: 1:2	COVER

Reserved property of SAVIO MACCHINE TESSILI S.p.A. In accordance with the law, the contents of this drawing may not be re-produced or communicated to third parties.