GENERAL TOLERANCES
Angular dimension +-1° - Roundness range of tolerance from IT4 to IT11. Must be contained within half of dimensional tolerance.
MACHINED holes H14 shafts h14 linear values Js14 -- ROUGH holes H16 shafts h16 linear values Js16
SHEETS cutting/laser cutting/punching Js13 holes H13 bending/pressing Js14 -- ALUMINIUM DIE CASTING Savio Norm 4011_1005_00
PLASTIC MATERIALS according to DIN 16901 -- CAST IRON Savio Norm 4011_1003_00
The general tolerances for ROUGH of plastic (DIN 16901) of aluminium (4011_1005_00), of CAST IRON (4011_1003_00), must be intended H for holes, h for shafts, Js for all the other dimensions

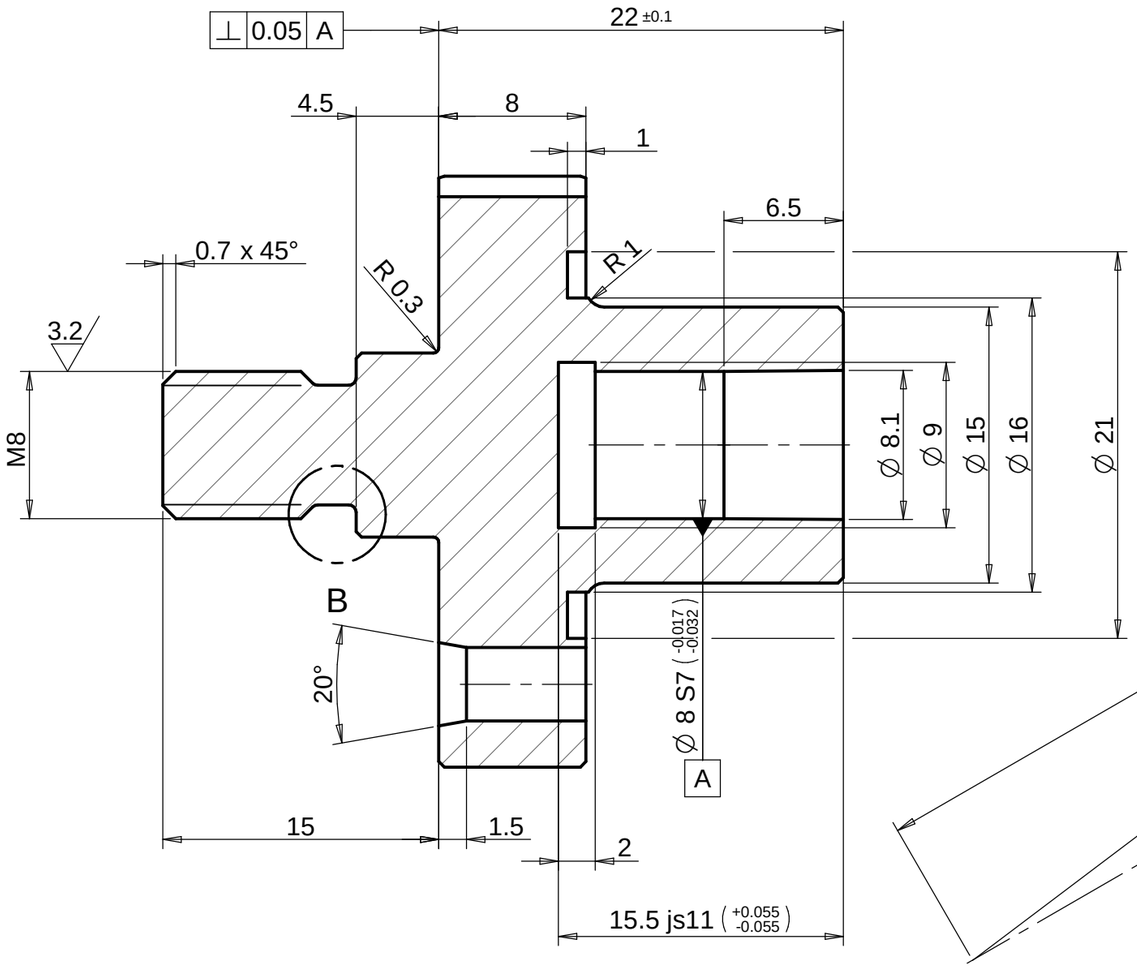

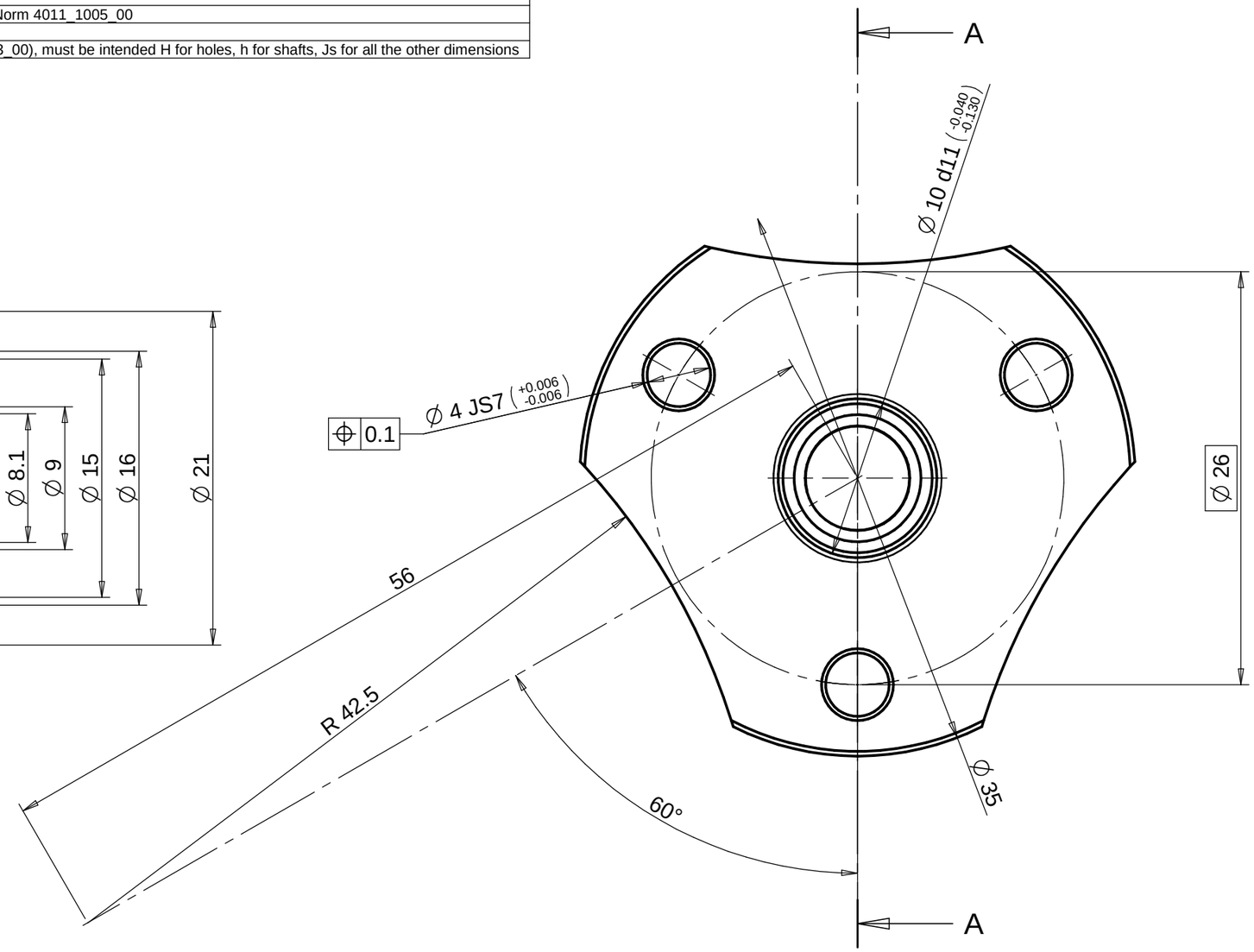

SECT./Sez. A-A

MATERIALE ALTERNATIVO : 36SMnPb14 + FOSFATAZIONE AL MANGANESE

VOLUME : 8.5 Cm^3

BAVA MAX 0.04
ANGOLO DI SFORMO NON INDICATO MAX 30'
* QUOTE MANCANTI FARE RIFERIMENTO AL 3D
SMUSSI NON QUOTATI 0.3x45°

1.6 (3.2)

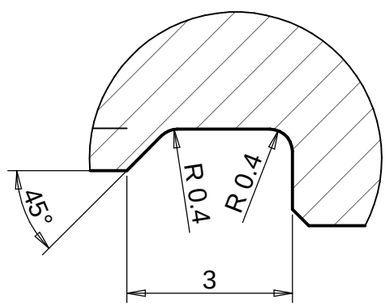

DET./Part. B
SCALE/Scala: 9:1

CN05431	Inserito materiale alternativo	25/02/2022	02
Change	Modification details:	Date Mod:	IRP

Changes to previous release:		Obtain from:	Substitute:
Material:	SINTERED STEEL D39 DIN 30910-4	Code:	4032_7336_60
Supply state:		Dimensions:	6,8-7,2 g/cm3
Thermic treat.:	Steam oxidation 4010_3055_05	Hardness(T):	
Surface treat.:		Hardness(S):	

DENOMINATION: MOZZO CAMBIOSPOLA PROXIMA

Savio	Draw.: Gianni D'Andrea	Date: 10/11/2020	040344.2.0
	Mod. : Dante Zancai	Sheet N°: 1/1	
	App. : Stefano Malfante	Scale: 3:1	HUB

Reserved property of SAVIO MACCHINE TESSILI S.p.A. In accordance with the law, the contents of this drawing may not be re-produced or communicated to third parties.