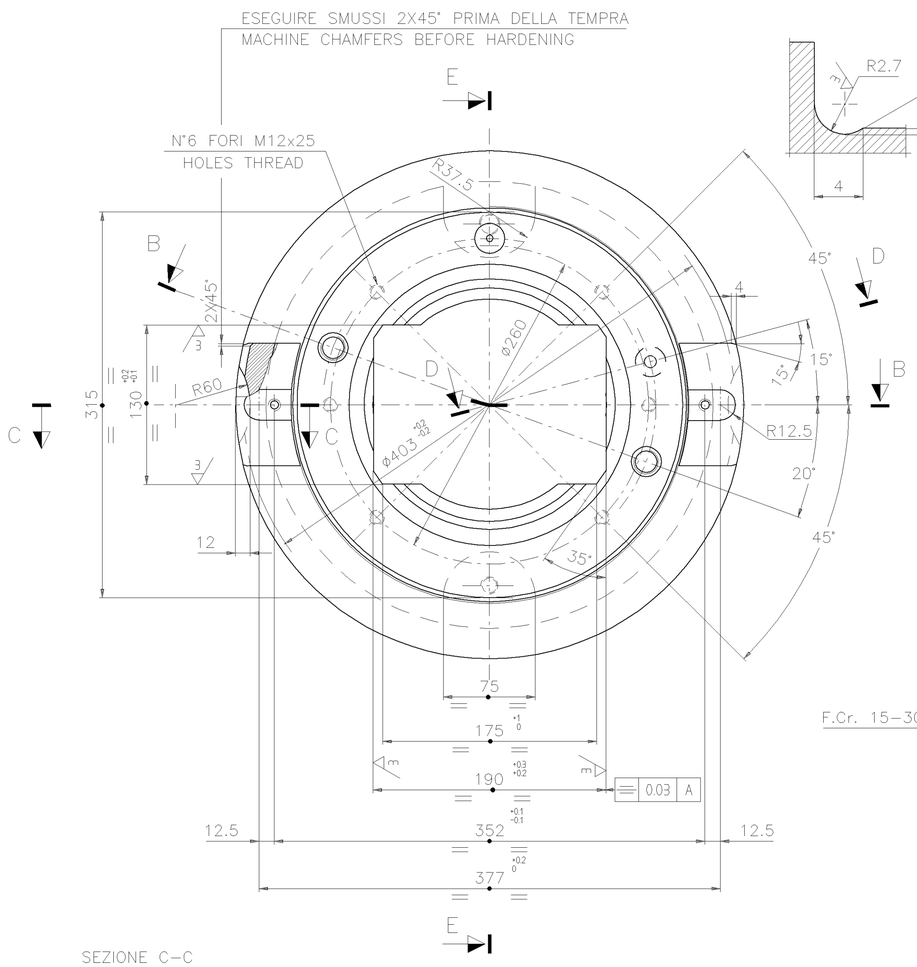

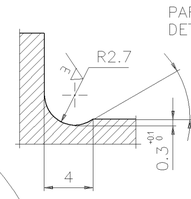

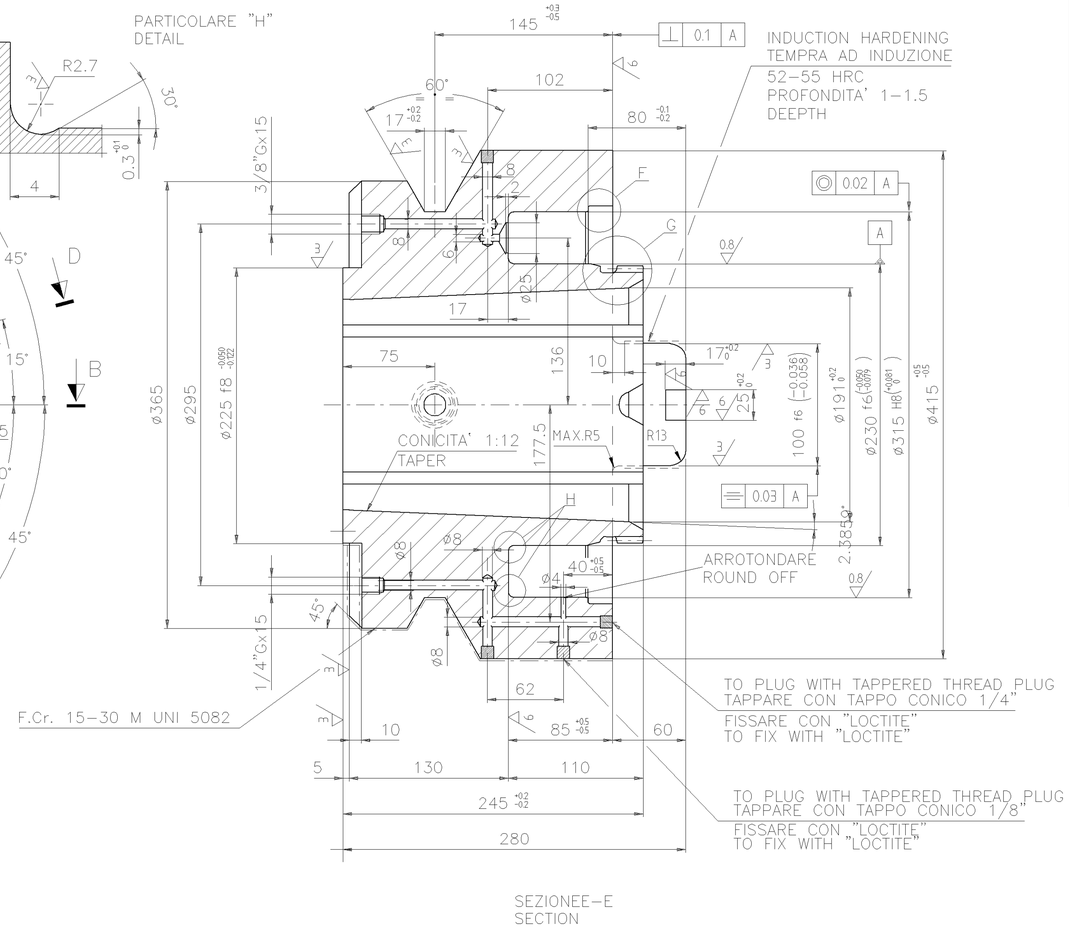

SEZIONEE–E
SECTION

DENTATURA CILINDRICA DIRITTA RIBASSATA INT.
DEPRESSED STREIGHT GEAR

MODULO NORMALE–NORMAL MODULE	Mn =	3
NUMERO DI DENTI–NUMBER OF TEETH	Z =	74
ANGOLO DI PRESSIONE–PRESSURE ANGLE	α =	20°
DIAMETRO PRIMITIVO–PITCH DIAMETER	øp =	222
DIAMETRO ESTERNO–OUTSIDE DIAMETER	øe =	226.8
DIAMETRO INTERNO–INTERNAL DIAMETER	øi =	216
ADDENDUM = 0.8 x M	a =	2.4
DEDENDUM = 1.25 x a	b =	3
MISURA WILDHABER NOMINALE SU N° DENTI / WILDHABER NOMINAL MEASURE ON N° TEETHS	W =	78.389
INGRANA CON PARTICOLARE / MESHES WHIT DETAIL	DIS. N° / DWG. N°	4.363838.C
INTERASSE–CENTER DISTANCE	I =	0
GIOCO SUI FIANCHI–SIDE CLEARANCE	j =	0.5

N.B.: ARROTONDARE GLI SPIGOLI INTERESSATI AL TRATTAMENTO DI TEMPRA.
ALL HARDENED EDGES MUST BE RADIATED.

SEZIONE C–C
SECTION

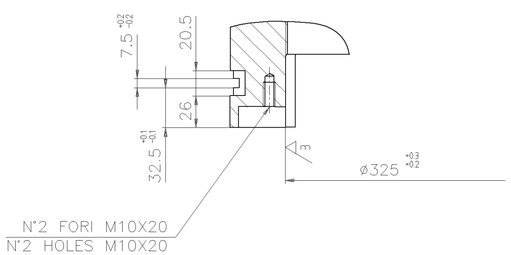

PARTICOLARE "G"
DETAIL

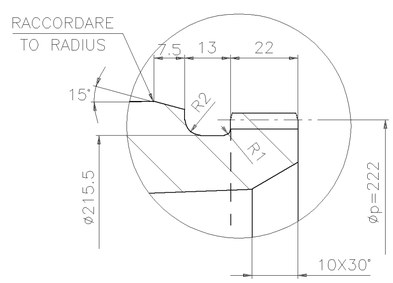

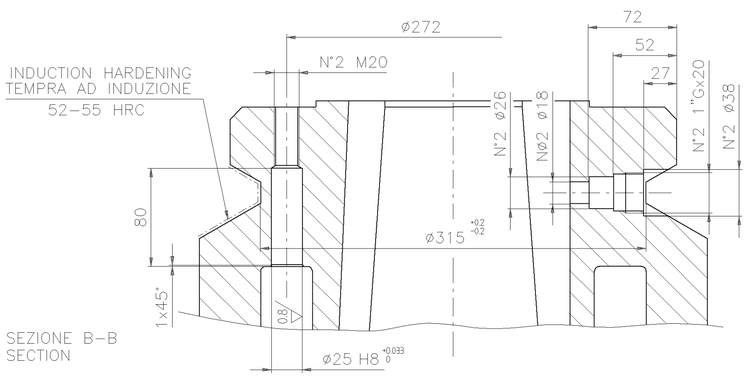

SEZIONE B–B
SECTION

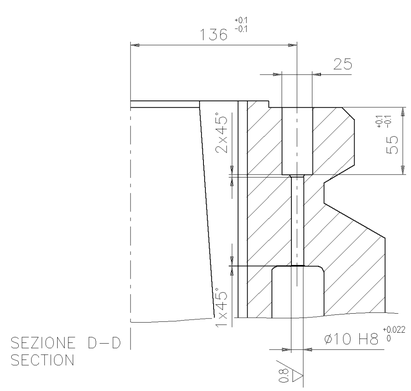

SEZIONE D–D
SECTION

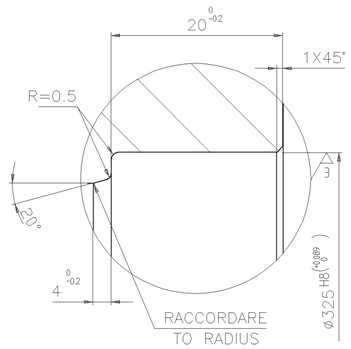

PARTICOLARE "F"
DETAIL

Rev.	Date	Revisions description	Drawn by	Checked by	Approved by
00	21 Dec 2004	EMISSIONE / ISSUED	Zampa L	Cattelan	

Material 1: C40E EN 10083–1	State of supply Mat.1: 5.900.004	Danieli Supply Std.: 2.8.001	Supply Class: B	Pattern DB
Material 2	State of supply Mat.2	Danieli Supply Std.	Supply Class	Casting Code
Material 3	State of supply Mat.3	Danieli Supply Std.	Supply Class	

Heat Treatment: BONIFICA
BONIFICA 210–230 HB
On Drawing Symbol, if required, ——: QUENCING & TEMPERING
HARD.&TEMP 210–230 HB

Coating: VEDI DISEGNO
On Drawing Symbol, if required, ——: SEE DRAWING

Unquoted radius (mm)	Unquoted bevels (mm)	Dimensions without tolerance as per	Machining	Max. Welding Class
	1X45°	DANIELI STD 2.4.103	12.5 / 6.3 / 3.2 / 0.8	

Project Name

DANIELI SERVICE

Job nr: Obtained from 4.491998.N
Replaces

Family code/Machine code: 40742
Weight (Kg): 130
J (Kgm²)

Title: CAPPELLO PER ANELLO DI LAMINAZIONE
CAP FOR ROLLING RING

Scale: 1:2.5
Format: A1
Nr. of sheets: 001
Sheet: 001
Follow

DANIELI Shop number: 5.050273.L
Revision: 00
DANIELI dwg number
Revision

According to law DANIELI & C. SpA considers this document to be a company secret and therefore prohibits any person to reproduce or disclose it or make it known in whole or in part to other parties or to competitors without specific written authorization of DANIELI's Management

File nr 5050273L_001

COMPUTER AIDED DESIGN –A