GENERAL TOLERANCES
Angular dimension +-1° - Roundness range of tolerance from IT4 to IT11. Must be contained within half of dimensional tolerance.
MACHINED holes H14 shafts h14 linear values Js14 -- ROUGH holes H16 shafts h16 linear values Js16
SHEETS cutting/laser cutting/punching Js13 holes H13 bending/pressing Js14 -- ALUMINIUM DIE CASTING Savio Norm 4011_1005_00
PLASTIC MATERIALS according to DIN 16901 -- CAST IRON Savio Norm 4011_1003_00
The general tolerances for ROUGH of plastic (DIN 16901) of aluminium (4011_1005_00), of CAST IRON (4011_1003_00), must be intended H for holes, h for shafts, Js for all the other dimensions

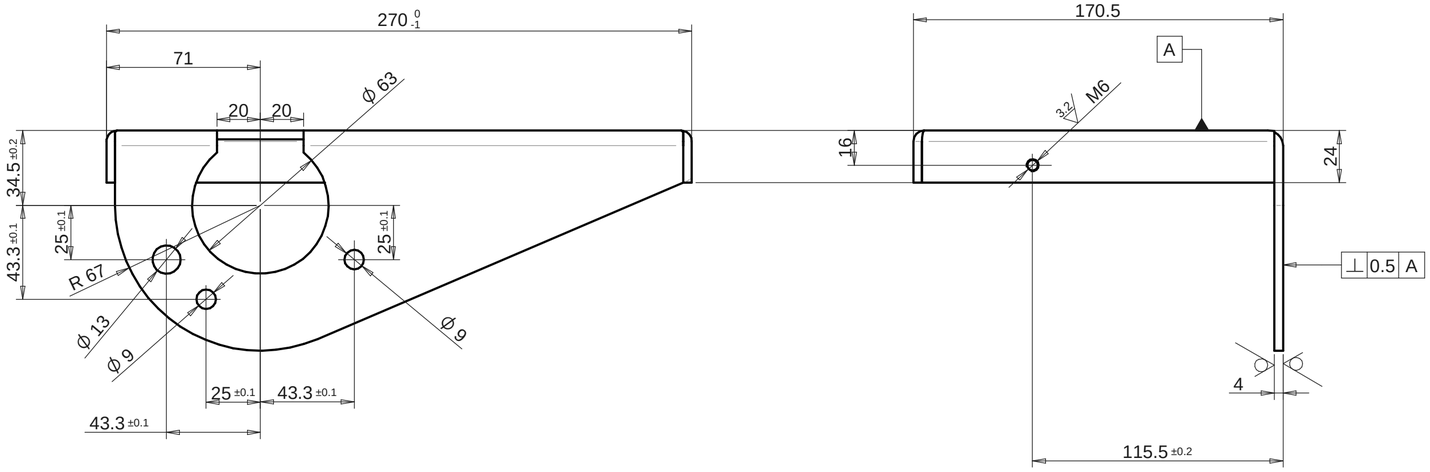

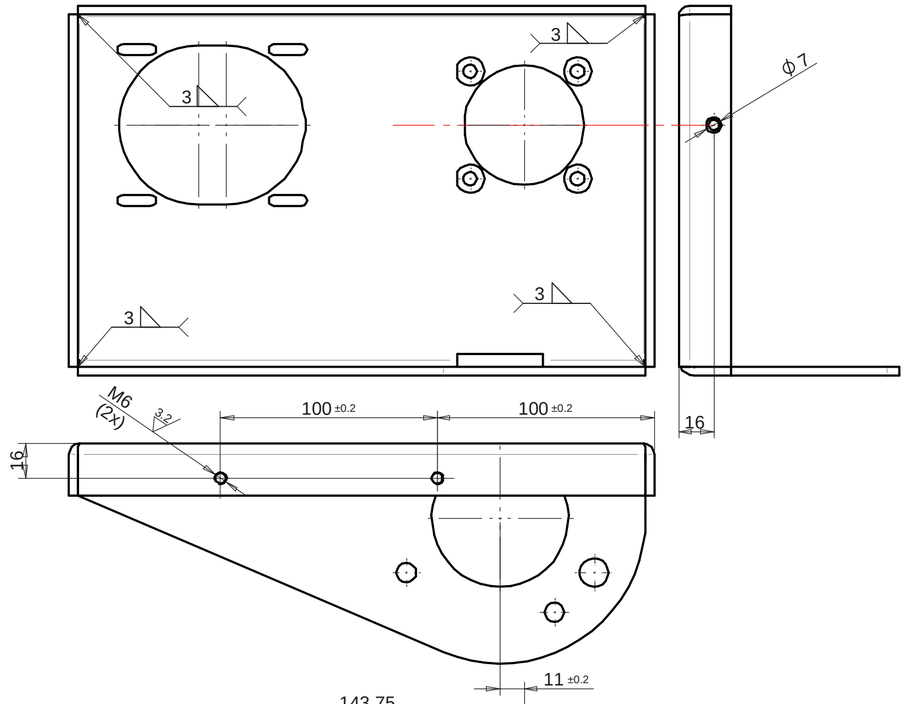

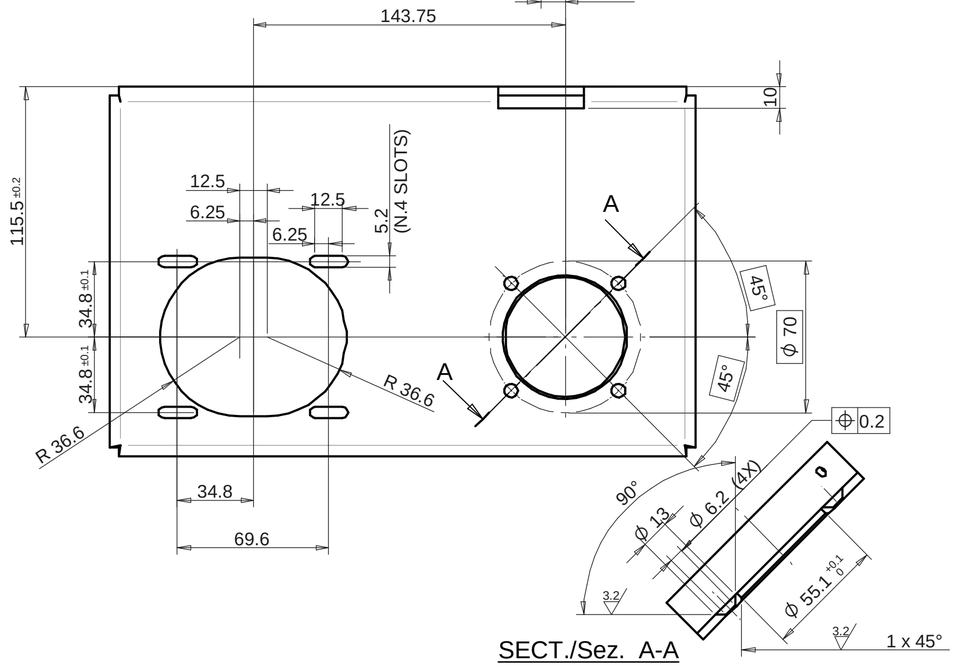

6.3 (3.2)

- FREE OF BURRS AND EDGES/Esente da bave e spigoli vivi
- BENDING INTERNAL RADIUS/Raggi interni di piega: R 4
- UNDIMENSIONED RADIUS /Raggi non quotati: R 1

CN06538		22/02/2023	00
Change	Modification details:	Date Mod:	IRP

Changes to previous release:		Obtain from:	Substitute:
Material:	S235J2G3 +N UNI EN 10025	Code:	4032_6002_99
Supply state:	+N: NORMALIZING ROLLING	Dimensions:	
Thermic treat.:		Hardness(T):	
Surface treat.:	Fe/Zn 8÷12 A HP UNI ISO 2081 free Cr VI	Hardness(S):	
Weigth: 1.9 kg	Volume: 247764.96 mm^3		

DENOMINATION: PIASTRA TRASMISSIONE SPOSTA TRAMA LYBRA DX

Draw.:	Date: 02/02/2023	055601.0.0	
Mod. :	Sheet N°: 1/1		
App. :	Scale: 1:2	PLATE	

ced or communicated to third parties.