GENERAL TOLERANCES
Angular dimension +-1° - Roundness range of tolerance from IT4 to IT11. Must be contained within half of dimensional tolerance.
MACHINED holes H14 shafts h14 linear values Js14 -- ROUGH holes H16 shafts h16 linear values Js16
SHEETS cutting/laser cutting/punching Js13 holes H13 bending/pressing Js14 -- ALUMINIUM DIE CASTING Savio Norm 4011_1005_00
PLASTIC MATERIALS according to DIN 16901 -- CAST IRON Savio Norm 4011_1003_00
The general tolerances for ROUGH of plastic (DIN 16901) of aluminium (4011_1005_00), of CAST IRON (4011_1003_00), must be intended H for holes, h for shafts, Js for all the other dimensions

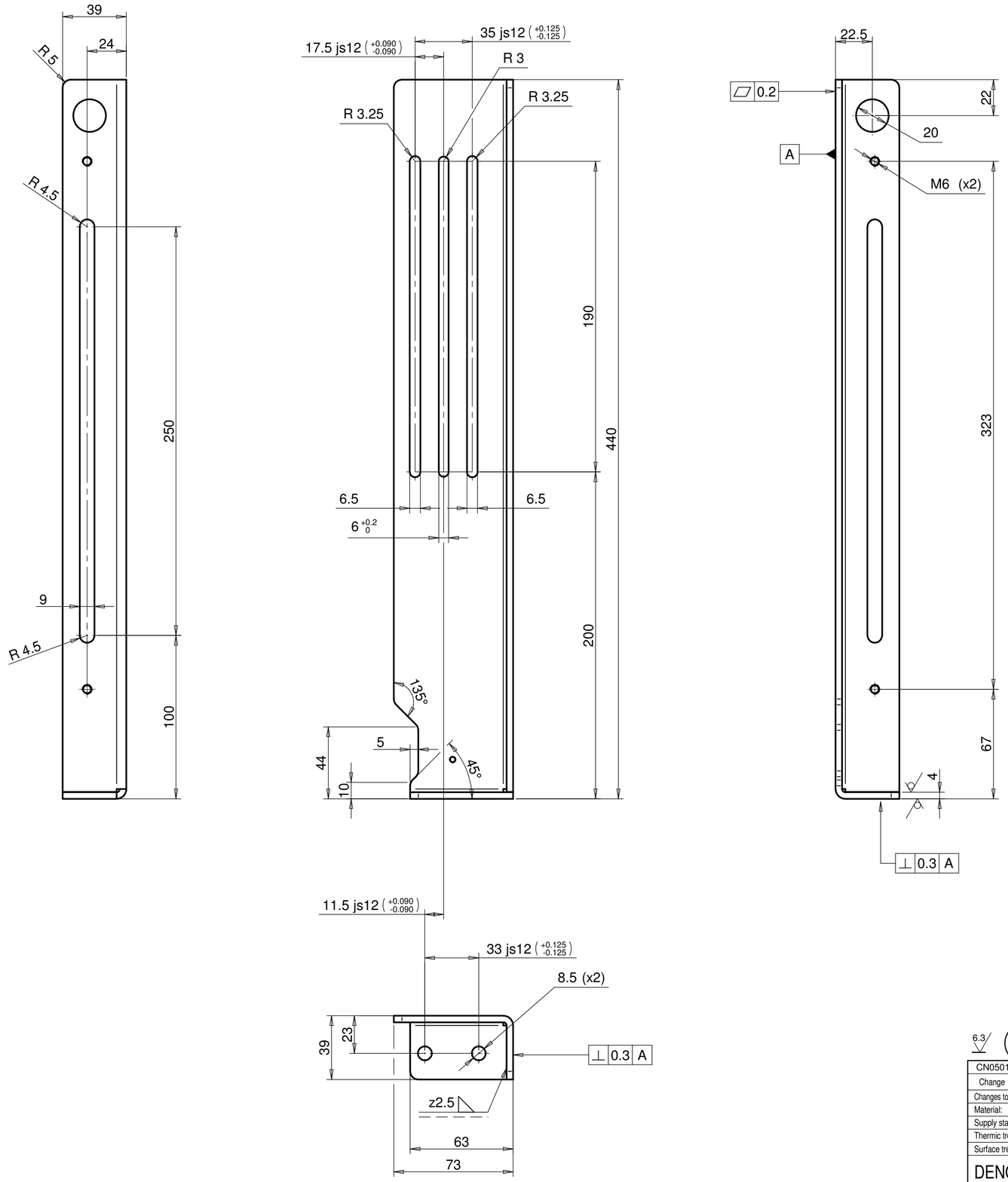

- BAVA MAX 0,04
- MAXIMUM BURR

- FORI FILETTATI RUGOSITÀ : 3.2
- THREADED HOLES ROUGHNESS

- RAGGI INTERNI DI PIEGA R=2.5
- INTERNAL BENDING RADIUSES

6.3 (3.2)

CN05014	MODIFICATA ZONA E4	08/07/2021	01
Change	Modification details:	Date Mod:	IRP

Approved

Changes to previous release:		Obtain from:	Substitute:
Material:	S235J2G3 +N UNI EN 10025	Code:	4032_6002_99
Supply state:	+N: NORMALIZING ROLLING	Dimensions:	
Thermic treat.:		Hardness(T):	
Surface treat.:	Fe/Zn 8÷12 A HP UNI ISO 2081 free Cr VI	Hardness(S):	

DENOMINATION: SUPPORTO CONTROPUNTA E PIEDINO

Savio	Draw.: Enrico Gaiotto	Date: 09/09/2020	038593.1.0
	Mod. : Enrico Gaiotto	Sheet N°: 1/1	
	App. : Giuseppe Morini	Scale: 1:2	BRACKET

Reserved property of SAVIO MACCHINE TESSILI S.p.A. In accordance with the law, the contents of this drawing may not be re-produced or communicated to third parties.