GENERAL TOLERANCES
Angular dimension +-1° - Roundness range of tolerance from IT4 to IT11. Must be contained within half of dimensional tolerance.
MACHINED holes H14 shafts h14 linear values Js14 -- ROUGH holes H16 shafts h16 linear values Js16
SHEETS cutting/laser cutting/punching Js13 holes H13 bending/pressing Js14 -- ALUMINIUM DIE CASTING Savio Norm 4011_1005_00
PLASTIC MATERIALS according to DIN 16901 -- CAST IRON Savio Norm 4011_1003_00
The general tolerances for ROUGH of plastic (DIN 16901) of aluminium (4011_1005_00), of CAST IRON (4011_1003_00), must be intended H for holes, h for shafts, Js for all the other dimensions

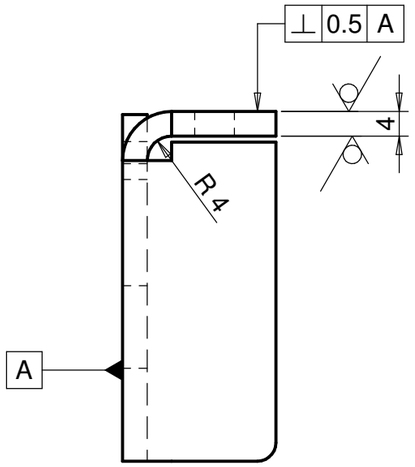

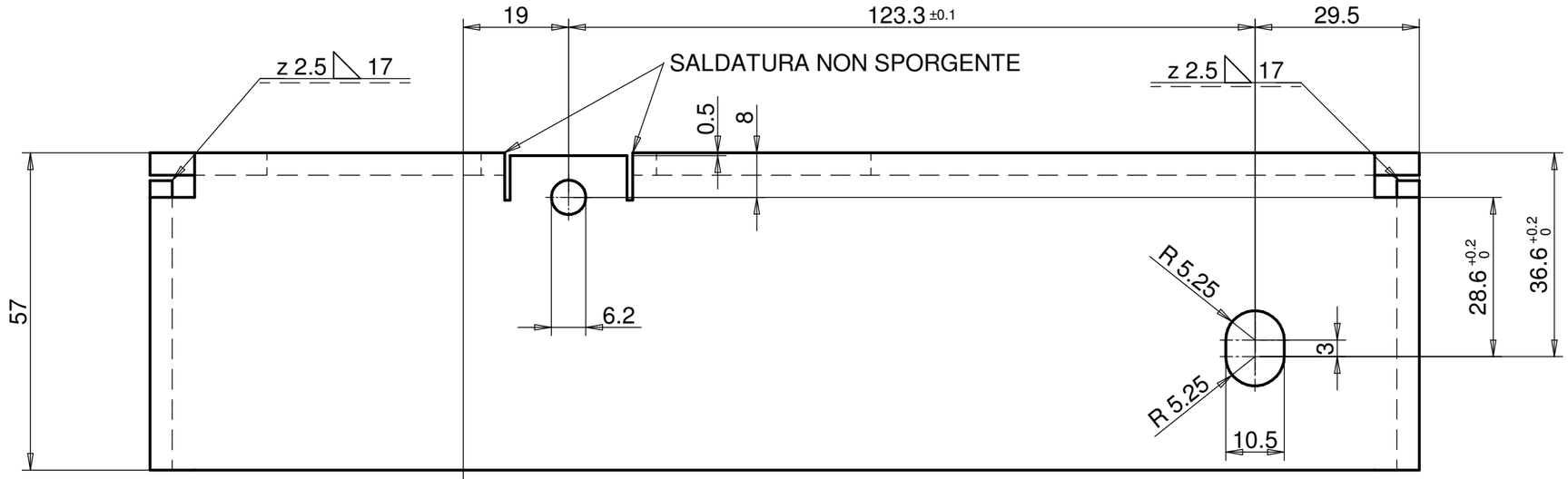

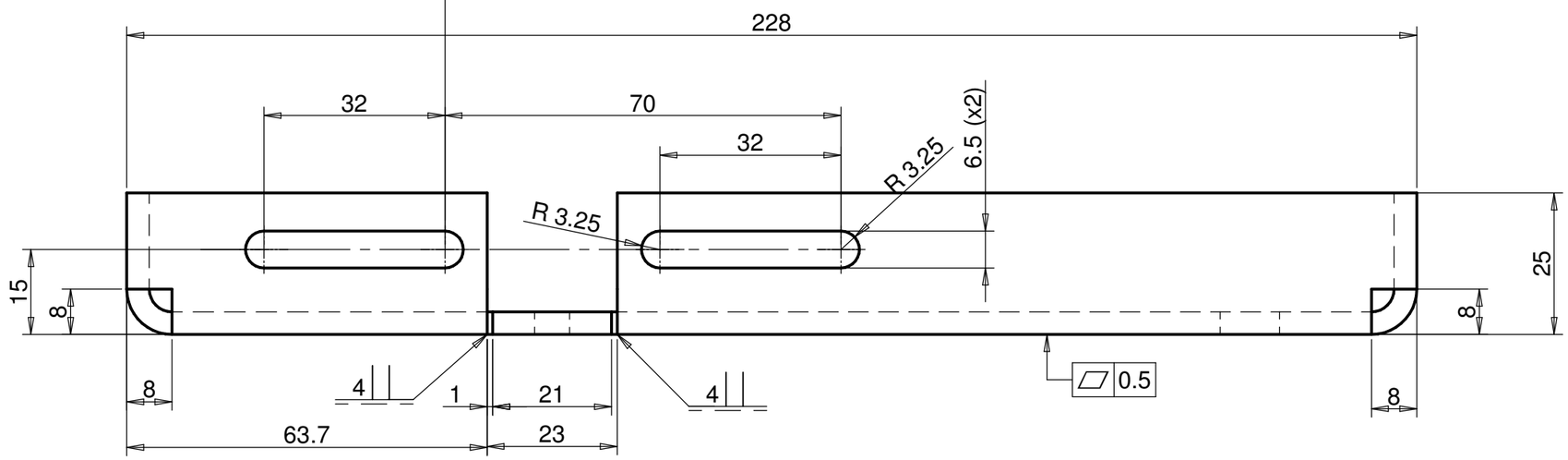

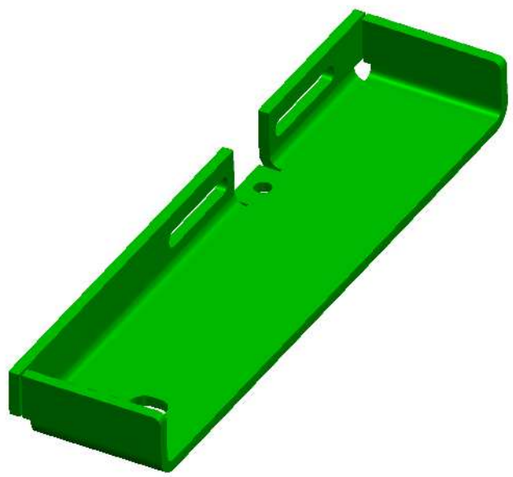

6.3 ( ) BAVA MAX. 0.04 / MAXIMUM BURR 0.04
RAGGI NON QUOTATI R=3 / UNDIMENSION RADIUS R=3

CN03155		22/03/2019	00
Change	Modification details:	Date Mod:	IRP

Changes to previous release:		Obtain from:	Substitute:
Material:	Fe 360 D UNI 7070	Code:	4032_6036_62
Supply state:	LAMINATA A CALDO-DECAPATA	Dimensions:	4x1250x2500
Thermic treat.:		Hardness(T):	
Surface treat.:	Fe/Zn8c2c UNI ISO 2081 free Cr VI	Hardness(S):	

DENOMINATION: PIASTRA SUPP. FERMO PIATTELLI TESTATA MC SX

Savio	Draw.: Enrico Gaiotto	Date: 21/03/2019	026036.1.0
	Mod. : Enrico Gaiotto	Sheet N°: 1/1	
	App. : Giuseppe Morini	Scale: 1:1	PLATE

Reserved property of SAVIO MACCHINE TESSILI S.p.A. In accordance with the law, the contents of this drawing may not be re-produced or communicated to third parties.