NOTES: UNLESS OTHERWISE SPECIFIED:
1. NO BURRS OR SHARP EDGES.
2. ALL DIMENSIONS APPLY AFTER FINISH.
3. CLEAN ALL PARTICULATE AND PACKAGE TO PREVENT CORROSION.
4. HEAT TREAT: HRC 27-33.
5. FINISH EXCEPT IN AREA INDICATED:
   OPTION A - ZINC PLATE PER, ASTM B633, SC3, TYPE II Fe/Zn12, BLACK,
   PER MATERIAL HARDNESS, APPLY APPROPRIATE PRE AND
   POST PLATING HEAT TREAT TO PREVENT HYDROGEN EMBRITTLEMENT.
   OPTION B - PPG 6000 ELECTROPHORESIS.
6. BAG AND TAG WITH PART NUMBER AND REVISION.
7. OPTIONAL IDENTIFICATION: PERMANENTLY ENGRAVE WITH HUB SERIAL NUMBER AT LOCATION SHOWN ON ONE FACE OF THE AXLE FLATS FEATURE. USE 3.0±1.0 MM LETTER HEIGHT.

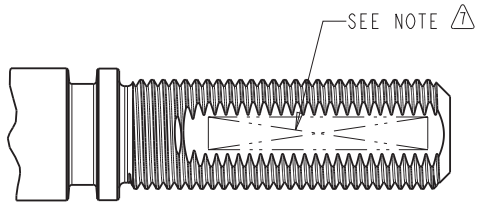

VIEW B-B

TABLE OF REVISIONS

DISPOSITION CODES: S = SCRAP, UU = USE UNTIL, R= RE-WORK NA= NOT APPLICABLE

DISP	ECR#	ITEM	ZONE	DESCRIPTION	BY	DATE	CHECKED	DATE
UU	ECR0162	E1	1C6	ADD Ø9.25 DIM AND ↗ FOR THREAD RELIEF	JCL	02/07/14	FW	02/07/14
		E2	2D8	ADD Ø14.9 DIM				
		E3	1D7, 1D1	ADD SECTION A-A ARROWS				
		E4	2D7, 2D6, 2D2, 2B4	ADD ↗ TOL TO Ø11, Ø14, Ø8.75, AND Ø11.65				
		E5	1D6	R0.5 WAS R0.4				
UU	1117	F1	1D3	REVISED RUNOUT FOR DIA 11.96/11.90, WAS: 0.025	BBS	20191211	KLK	20191211

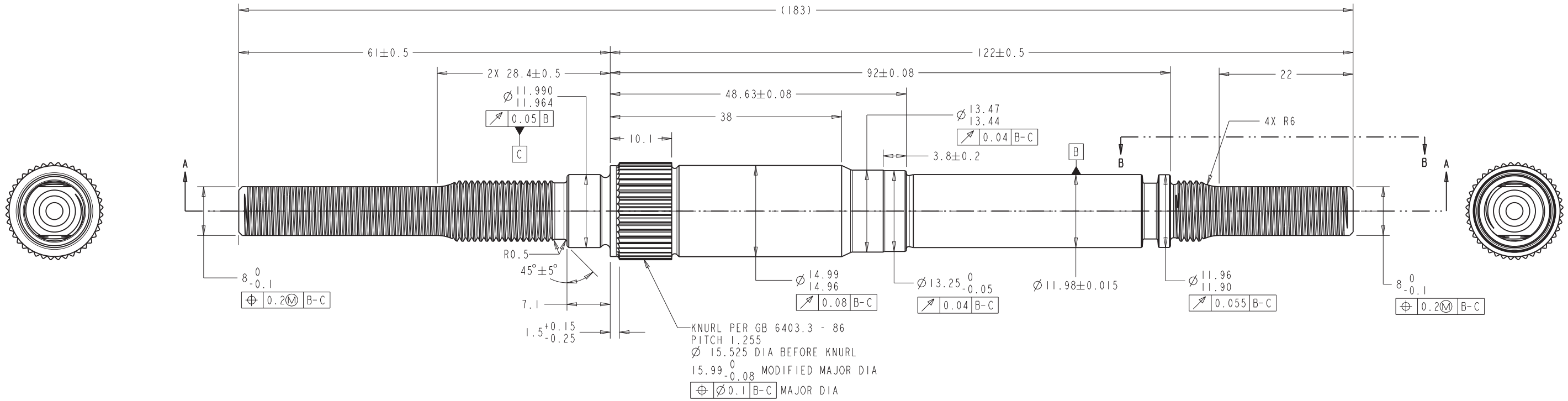

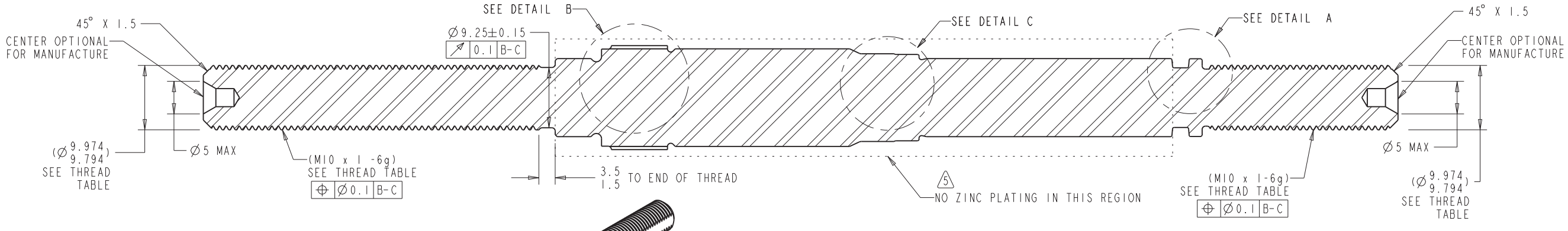

SECTION A-A

EXTERNAL THREAD TABLE		
M 10 x 1 - 6g		
METRIC M PROFILE ANSI/ASME B1.13M-1983 (R1995)		
	MAX	MIN
MAJOR DIAMETER	9.974	9.794
PITCH DIAMETER	9.324	9.212
ROUNDED ROOT MINOR DIAMETER	8.907	8.596
ROOT RADIUS	---	0.125
FLAT ROOT MINOR DIAMETER	8.891	---

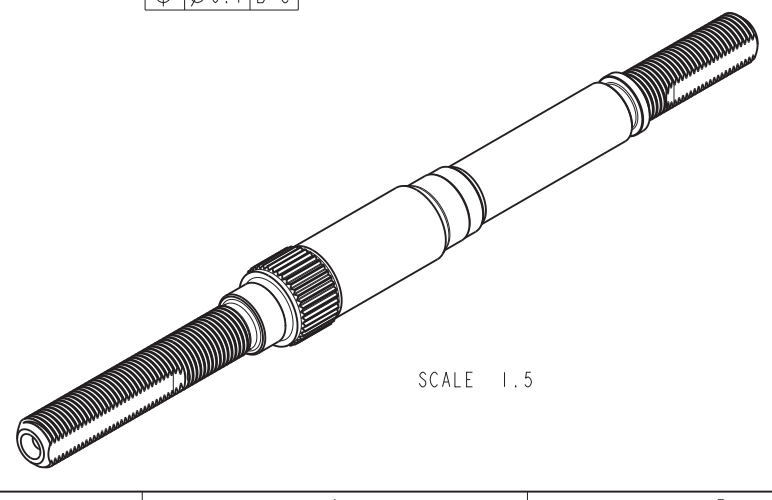

SCALE 1.5

PROPRIETARY AND CONFIDENTIAL

THIRD ANGLE PROJECTION

UNLESS OTHERWISE SPECIFIED
INTERPRET GEOMETRIC TOLERANCING PER: ASME Y14.5M-1994
INTERPRET ABBREVIATIONS AND ACRONYMS PER: ASME Y14.38-1999
DIMENSIONS ARE IN MM
DIMENSIONS IN [ ] ARE IN INCHES
BREAK ALL SHARP EDGES 0.13-0.41
RADIUS INSIDE CORNERS R 0.41 MAX
SURFACE TEXTURE - 1.6 µm MAX
TOLERANCES:
LINEAR ±0.15 ANGLES ±1.0

DO NOT SCALE DRAWING

	NAME	DATE
DRAWN	J.NICHOLS	10/15/09
CHECKED	B.SWEET	10/15/09
ENG APPR.	J.NICHOLS	10/15/09
MFG APPR.	M.HOUSE	10/16/09
Q.A.	M.HOUSE	10/16/09

MATERIAL:
ALLOY STEEL
SAE 4140 (SEE NOTES)

FINISH:
SEE NOTES

WEIGHT: 0.151 KG

DESCRIPTION:
SHAFT,
MAIN, KNURLED

SIZE	DRAWING NUMBER	REV
D	B35-0225-00	F

REL/VER STATUS: Released : 2
MODEL NAME: B35-0225-00
SCALE: 3.000
SHEET 1 OF 2

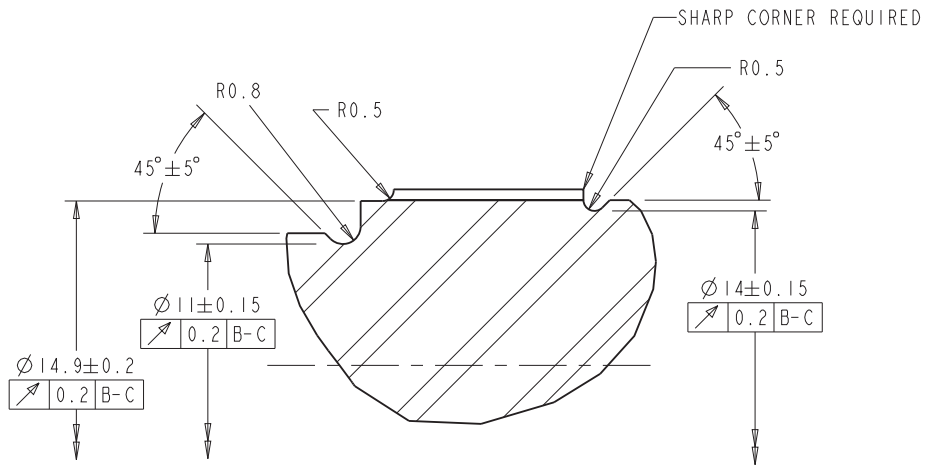

DETAIL B
SCALE 6.0

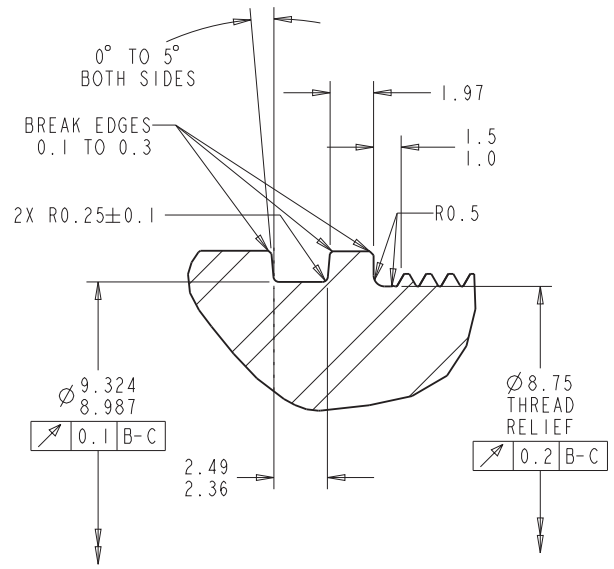

DETAIL A
SCALE 6.0

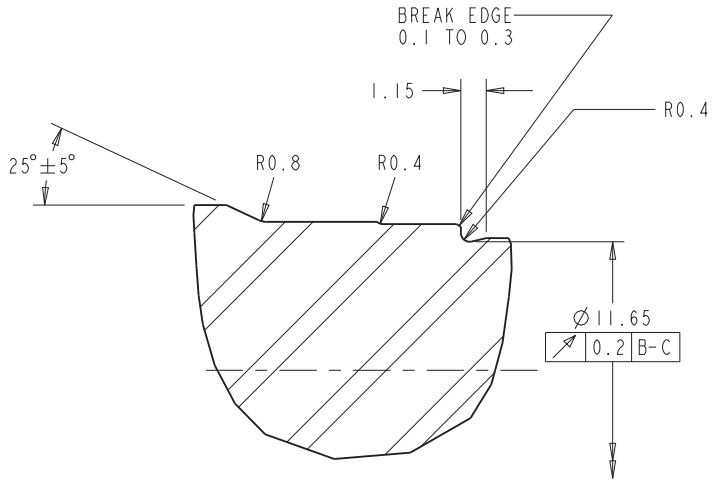

DETAIL C
SCALE 6.0

PROPRIETARY AND CONFIDENTIAL

THIRD ANGLE PROJECTION	DO NOT SCALE DRAWING		
		NAME	DATE
UNLESS OTHERWISE SPECIFIED	DRAWN	J.NICHOLS	10/15/09
INTERPRET GEOMETRIC TOLERANCING PER: ASME Y14.5M-1994	CHECKED	B.SWEET	10/15/09
	ENG APPR.	J.NICHOLS	10/15/09
INTERPRET ABBREVIATIONS AND ACRONYMS PER: ASME Y14.38-1999	MFG APPR.	M.HOUSE	10/16/09
	Q.A.	M.HOUSE	10/16/09
DIMENSIONS ARE IN MM DIMENSIONS IN [ ] ARE IN INCHES	MATERIAL:		DESCRIPTION:
BREAK ALL SHARP EDGES 0.13-0.41 RADIUS INSIDE CORNERS R 0.41 MAX	ALLOY STEEL SAE 4140 (SEE NOTES)		SHAFT, MAIN, KNURLED
SURFACE TEXTURE - 1.6 μm MAX	FINISH:	SIZE	DRAWING NUMBER / REV
TOLERANCES: LINEAR ±0.15 ANGLES ±1.0	SEE NOTES	D	B35-0225-00 / F
	WEIGHT: 0.151 KG		
REL/VER STATUS: Released : 2	MODEL NAME: B35-0225-00	SCALE: 3.000	SHEET 2 OF 2