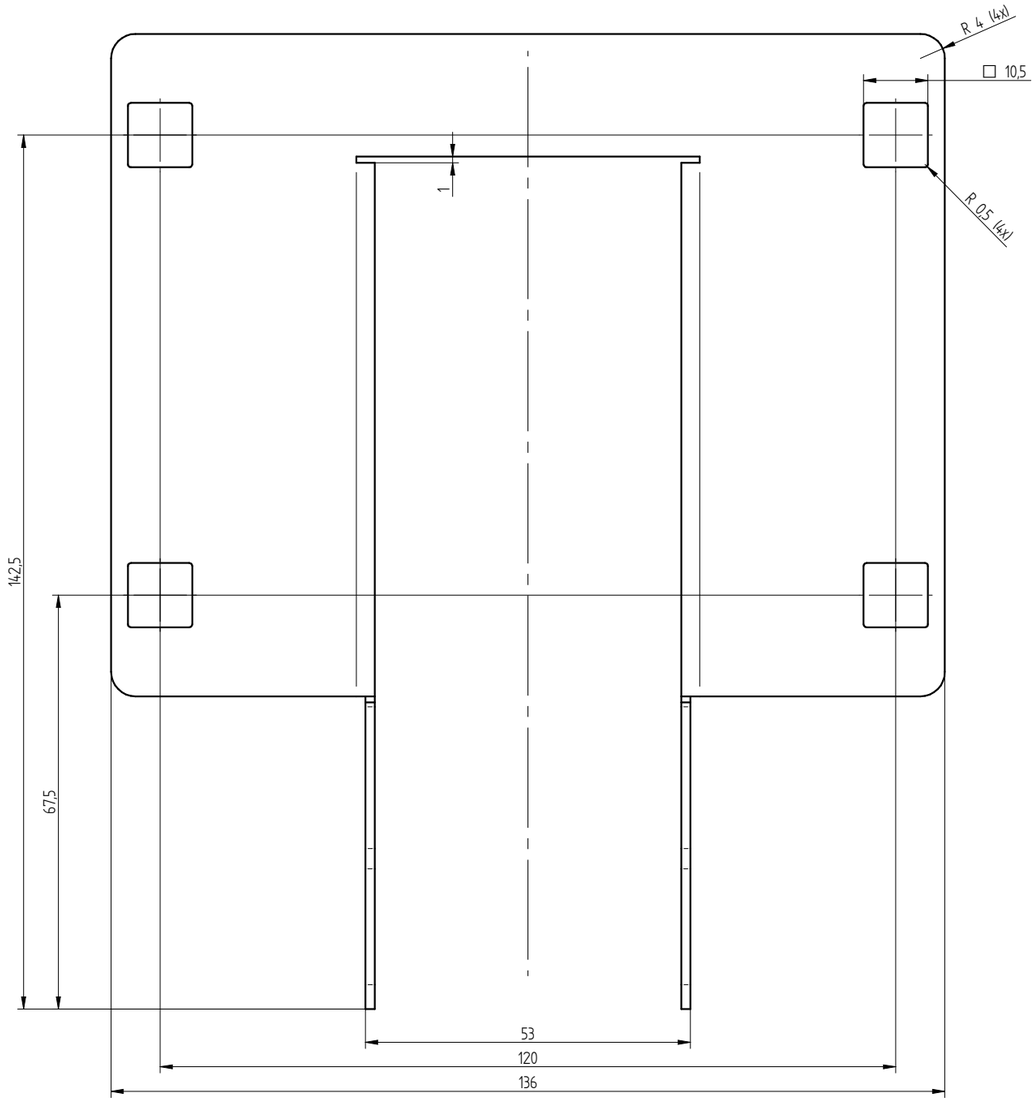

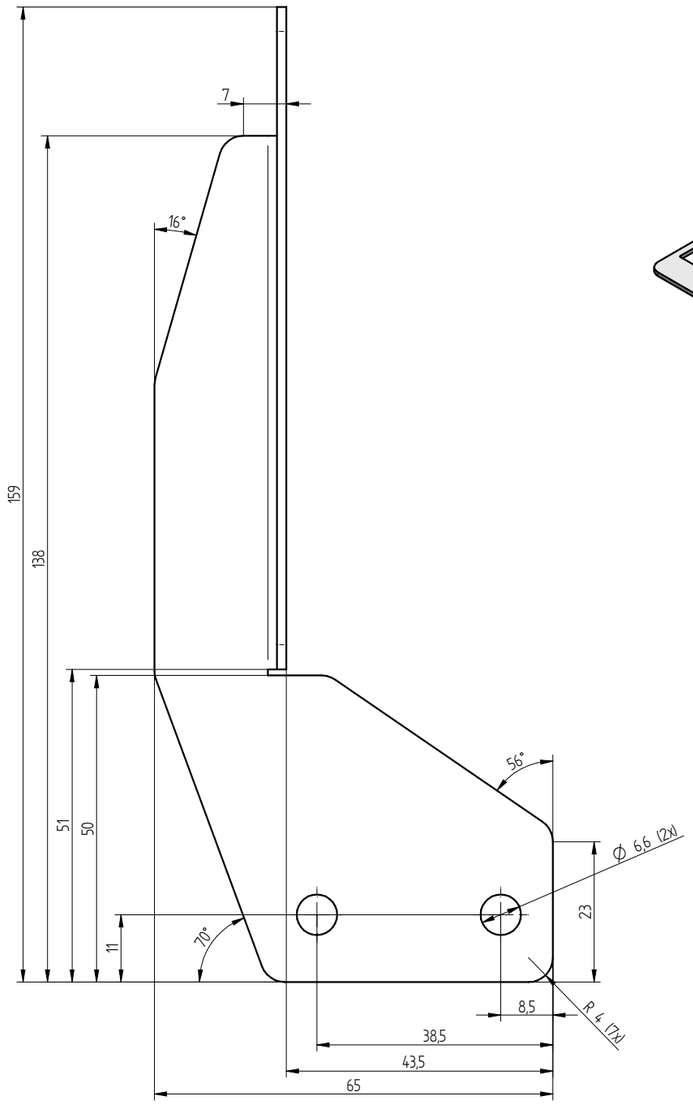

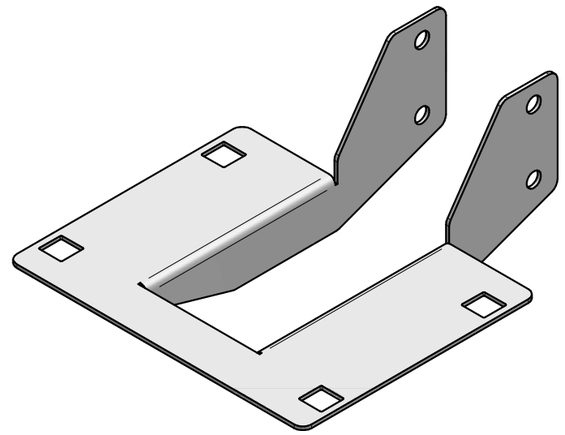

1:2

Tulle le misure / tolleranze valgono dopo il trattamento superficiale!
Alle Maße / Toleranzen gelten nach der Oberflächenbehandlung!

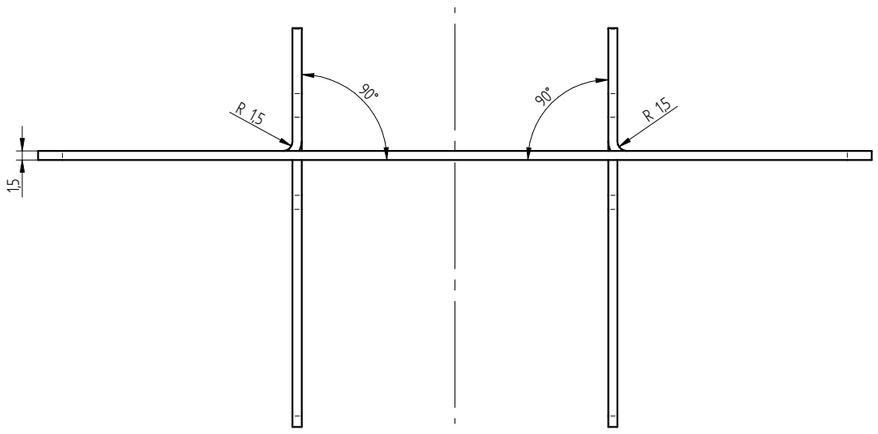

Blech / lamiera s=1,50 mm
Biegeradius / raggio di piega R=1,50 mm

Ra3,2 superfice taglio laser / Laserschnittfläche

DIN 6784 −0,1 −0,5

General tolerances for manufacturing processes	Mechanical production turning, milling and bending	ISO 2768-mk	Thermal cutting	ISO 9013	Welding construction	ISO 13920	Metal moulded parts	ISO 8062	Plastic moulded parts	ISO 20457
Geometrix product specification According to GPS rules	Fundamentals, concepts principles and rules	ISO 8015	Tolerances of form, orientation, location and run-out	ISO 1101	Welding joint	ISO 2553	Work piece esge	ISO 13715	Surface condition	ISO 1302

Revision	Version	Description of the change	Date	Creator	Approver

Scale 1 : 1	Material S235JR		Surface treatment electroplating EN ISO 2081 Fe/Zn12A		Weight 0.20 kg
Page size A3	Status of drawing Released		Item number SBUF0718	Revision 00 / Version A	Page 1/1
Dimensioning unit mm	Creator Sonnert J.	Approver Sonnert J.			IDOOK "dft" 444742
Projection method	Create date 18.02.2022	Approve date 18.02.2022	Description Mounting bracket heating box nozzle ring V22 ORCA		

ISO 16016

The reproduction, distribution and utilization of this document as well as the communication of its contents to others without express authorization is prohibited. Offenders will be held liable for the payment of damages. All rights reserved in the event of the grant of a patent, utility model or design.