GENERAL TOLERANCES
Angular dimension +-1° - Roundness range of tolerance from IT4 to IT11. Must be contained within half of dimensional tolerance.
MACHINED holes H14 shafts h14 linear values Js14 -- ROUGH holes H16 shafts h16 linear values Js16
SHEETS cutting/laser cutting/punching Js13 holes H13 bending/pressing Js14 -- ALUMINIUM DIE CASTING Savio Norm 4011_1005_00
PLASTIC MATERIALS according to DIN 16901 -- CAST IRON Savio Norm 4011_1003_00
The general tolerances for ROUGH of plastic (DIN 16901) of aluminium (4011_1005_00), of CAST IRON (4011_1003_00), must be intended H for holes, h for shafts, Js for all the other dimensions

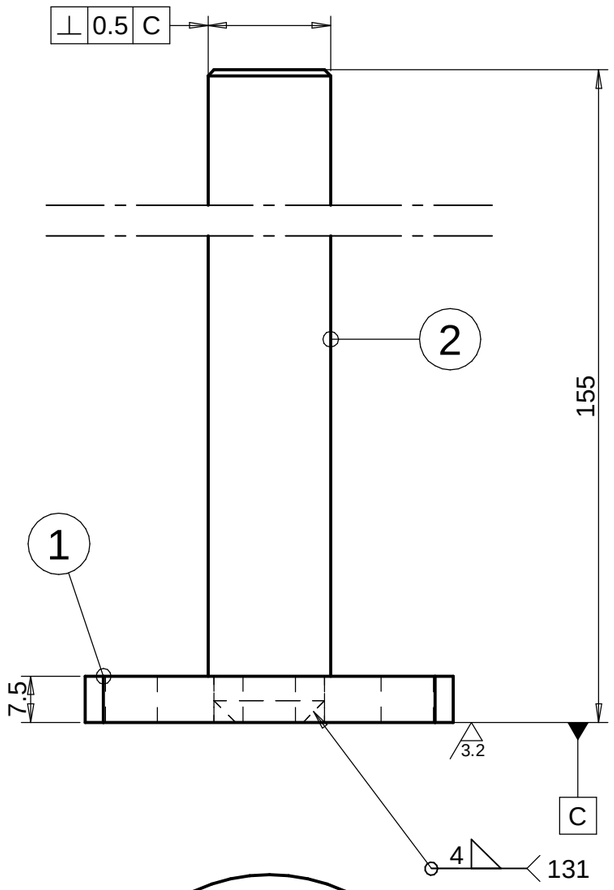

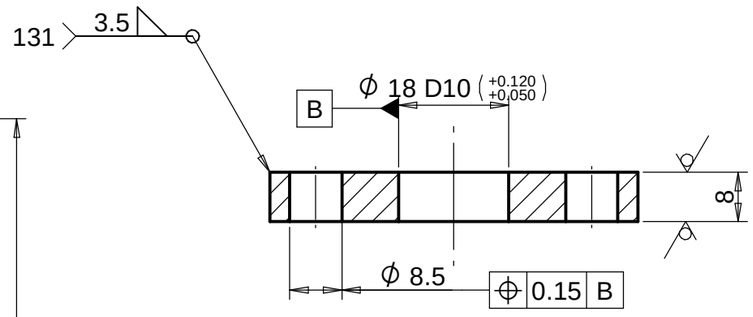

SECT./Sez. B-B

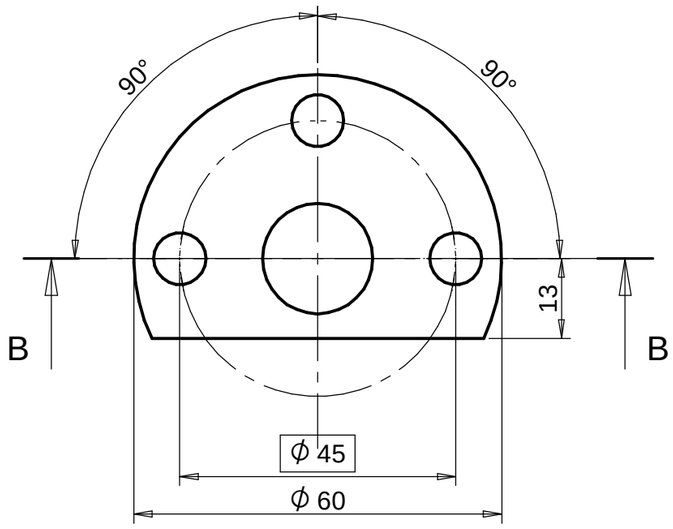

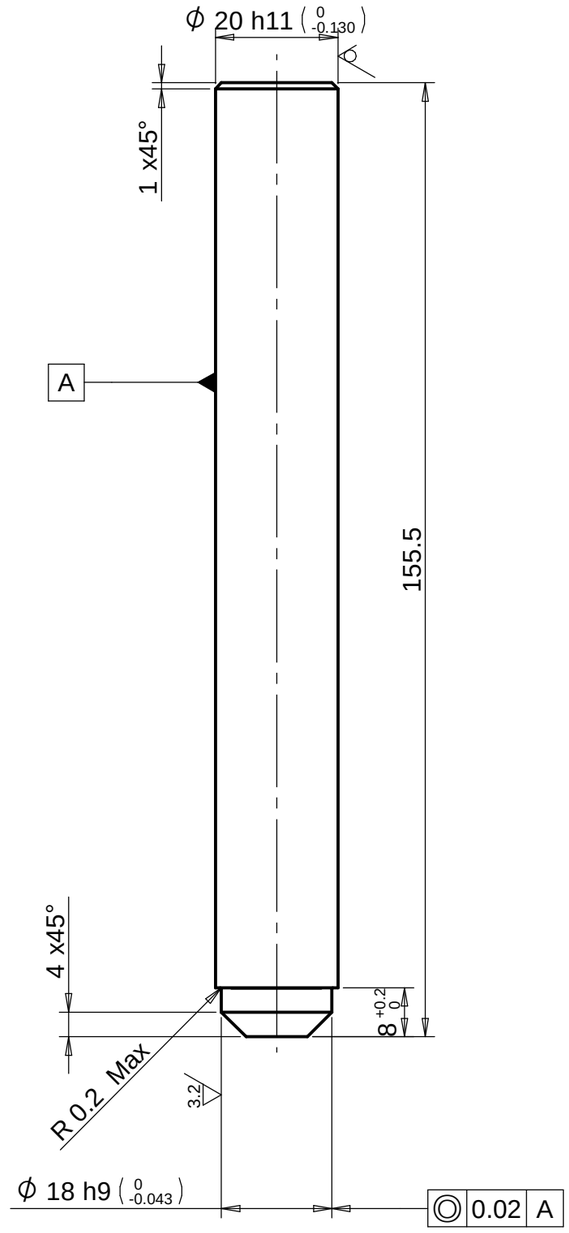

6.3 (3.2)

FREE OF BURRS

CN06378	Modified surface treatment	17/10/2023	02
Change	Modification details ☐:	Date Mod:	IRP

Changes to previous release △:		Obtain from:	Substitute: 16220_3457_0_0
Material:		Code:	
Supply state:		Dimensions:	
Thermic treat.:		Hardness(T):	
Surface treat.:	Mnph r 10 UNI ISO 9717	Hardness(S):	
Weigth: 481.2 g	Volume: 61296.10 mm^3		

DENOMINATION: PERNO SUPP.INFILAGGIO X SPOLA 280-250

Draw.: Gianni D'Andrea	Date: 22/11/2019	035657.0.0	
Mod. : Rodolfo Gobbo	Sheet N°: 1/1		
App. : Stefano Malfante	Scale: 1:1	STUD	

POS.	Code	Q.ty	Raw Material	Material Description	Techical Description
2	035657.0.B	1	006451.0.0	S355J2G3 (11523) Round Bar 20	
1	035657.0.A	1	4032_6002_99	S235J2G3 +N UNI EN 10025	

Reserved property of SAVIO MACCHINE TESSILI S.p.A. In accordance with the law, the contents of this drawing may not be re-produced or communicated to third parties.