GENERAL TOLERANCES	
Angular dimension +-1° - Roundness range of tolerance from IT4 to IT11. Must be contained within half of dimensional tolerance.	
MACHINED holes H14 shafts h14 linear values Js14 -- ROUGH holes H16 shafts h16 linear values Js16	
SHEETS cutting/laser cutting/punching Js13 holes H13 bending/pressing Js14 -- ALUMINIUM DIE CASTING Savio Norm 4011_1005_00	
PLASTIC MATERIALS according to DIN 16901 -- CAST IRON Savio Norm 4011_1003_00	
The general tolerances for ROUGH of plastic (DIN 16901) of aluminium (4011_1005_00), of CAST IRON (4011_1003_00), must be intended H for holes, h for shafts, Js for all the other dimensions	

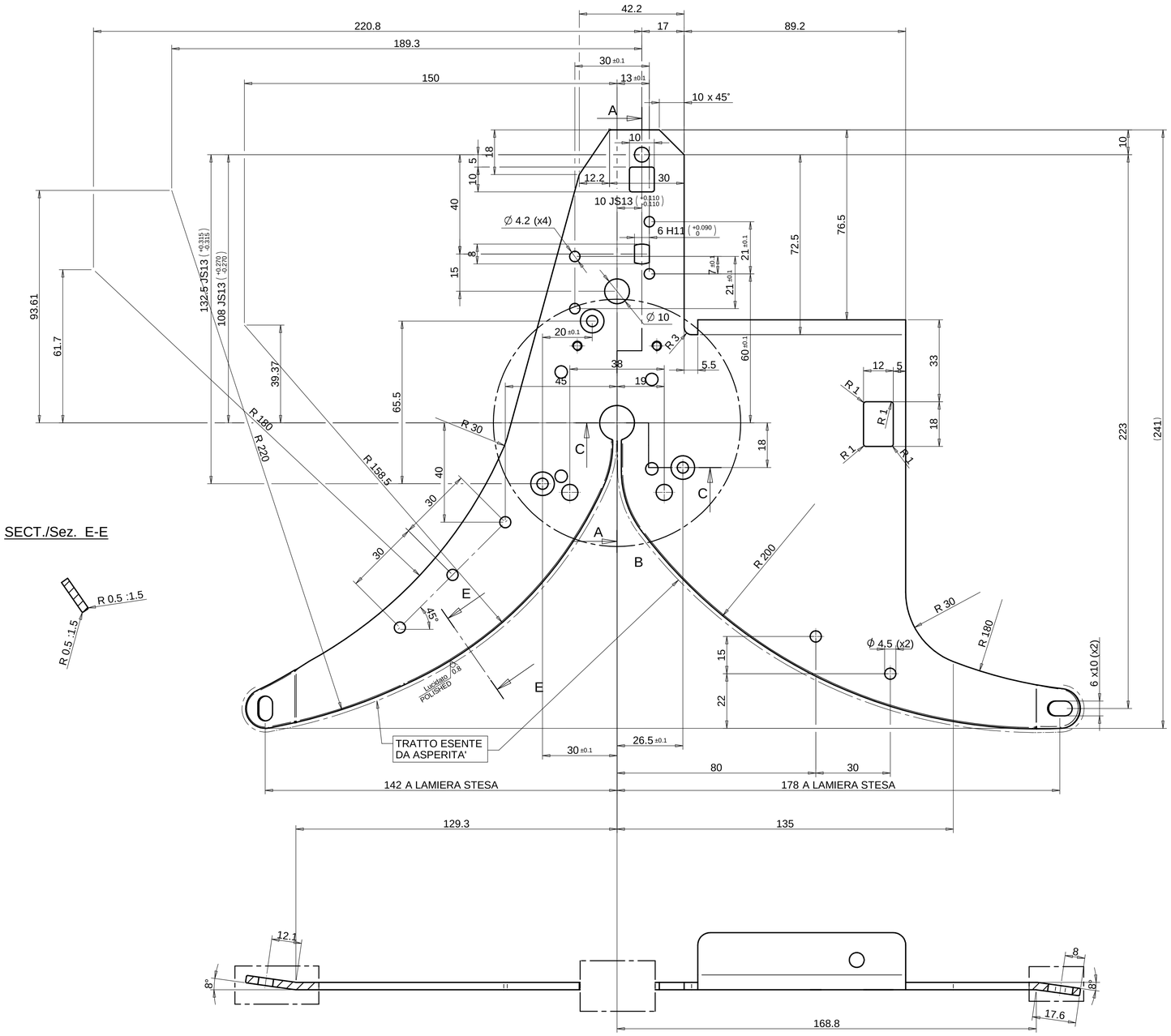

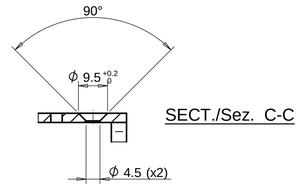

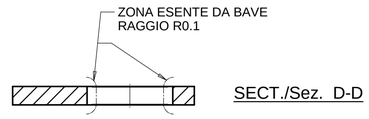

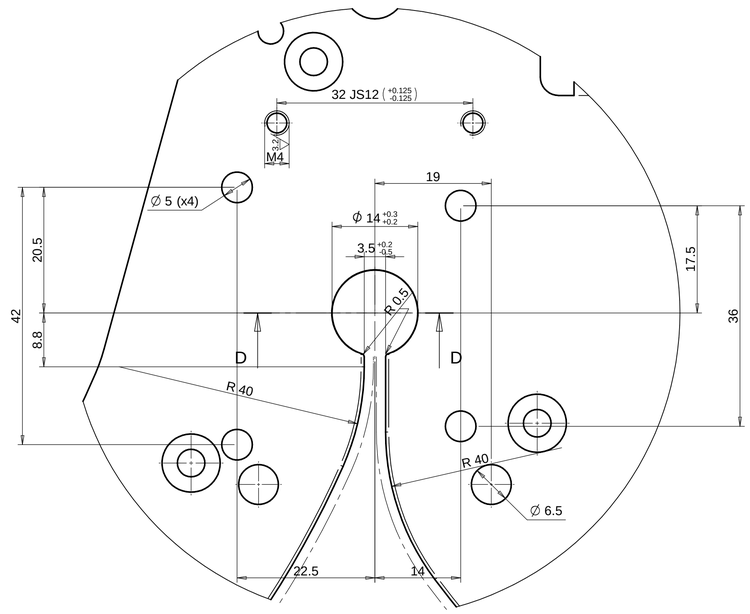

DET./Part. B

6.3 (3.2 0.8) POLISHED Lucidato

SPIGOLI ESENTI DA BAVE / Edges without burrs

CN06288	CUT IN E-F / 10	21/11/2022	5
Change	Modification details:	Date Mod:	IRP
Changes to previous release:	ELIMINATO RICCIO ZONA E5 E MODIFICATO ESTREMITA' ASOLE	Obtain from:	Substitute: 018985.0.0
Material:	DD11 A1 UNI EN 10111	Code: 4032_6153_99	
Supply state:	A1: SEE EN 10163-2:2004	Dimensions:	
Thermic treat.:		Hardness(T):	
Surface treat.:	Fe/Ni10b UNI ISO 1458	Hardness(S):	
Weigth:	Volume:		

DENOMINATION: INTRODUTTORE FILO INFERIORE ECOPOLAR R

SAVIO	Draw.: Gianni D'Andrea	Date: 25/10/2017	018985.1.0
	Mod.: Kevin Gnan	Sheet N°: 1/1	
	App.: Stefano Malfante	Scale: 1:1	INTRODUCER

Reserved property of SAVIO MACCHINE TESSILI S.p.A. In accordance with the law, the contents of this drawing may not be re-produced or communicated to third parties.