CODE		MANUFACTURING NO FOR EXPORT PART		DRAWING NO	1732377A

Z (2:1)

Ausschnittgeometrie nach Wahl des Herstellers.
Durch SRK Entwicklungs freigegeben.
Cut-out geoemtry at suppliers choice.
Approved by SRK development department.

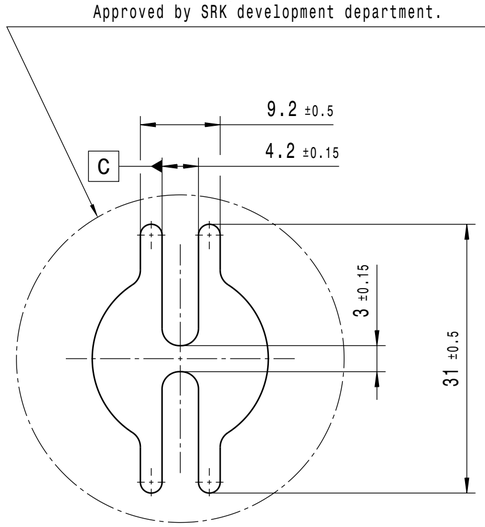

A-A

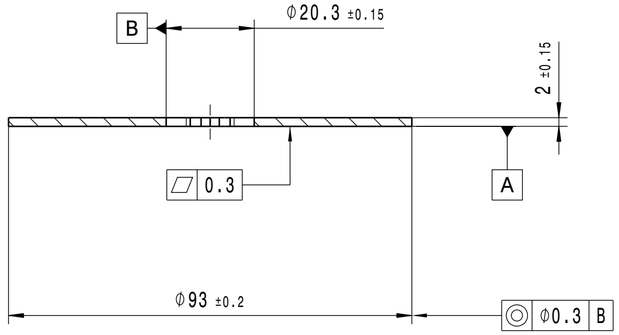

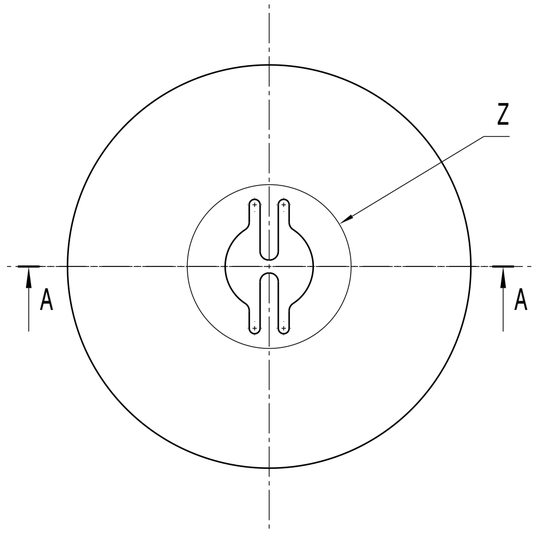

STANDARDS / REFERENCES

DIN 6930-2
DIN EN 10149-2
DIN EN 10204
VW 01133
VW 13750
VW 52000
VW 91101
VW 91102

DRAWING INDEX	REVISION TEXT	CREATED/REVISED DATE	CREATED/REVISED NAME	STANDARDS CHECKED	DRAWING RELEASE DATE	DRAWING RELEASE NAME DEV	DRAWING RELEASE NAME PM
a.00	Zeichnung erstellt / Drawing created	01.09.22	BSC				

Nur fuer Anfrage!
Only for request!

Anlieferungszustand:
frei von Bearbeitungsoelen, trocken
Delivery conditions:
free of machining fluids, dry

Kanten gratfrei.
All edges to be free of burrs.

Oberflaechen fehlerfrei VW 01133
free from surface flaws VW 01133

Werkstoffliche Bemusterung nach VW 52000
Material sample inspection as per VW 52000

Schadstoffvermeidung nach VW 91101
Avoidance of hazardous substances acc. VW 91101

Recyclinganforderung nach VW 91102
recycling requirements acc. to VW 91102

Nicht bemaszte Kontur nach 3D - DATENSATZ. | 0.8 | CAD-model
For undimensioned geometry please see 3D data.

NOTES

Kriterien fuer maszbezogene Bewertung / Criteria for Evaluation of Measurements	
Requalifizierungsmerkmale sind mit SumiRiko AVS abzustimmen, der Nachweis ist einmal jaehrlich unaufgefordert vorzulegen. Characteristics of requalification has to be agreed by SumiRiko AVS and to be presented once a year.	
	Serienbegleitende Pruefung mit Dokumentation Has to be checked and recorded during serial production
Warenbegleitende Dokumentation / Documentation accompanying the Goods	
../A	Vor der ersten Anlieferung, d. h. zur Erstbemusterung. Prior to first delivery, i. e. at first inspection.
../B	Bei jeder Anlieferung. With each delivery.
../C	Nur auf Anforderung. Only upon request.
Grundlage nichtspezifischer Pruefung / Basis of unspecific Audit	
WB1	Werksbescheinigung "2.1" nach DIN EN 10204 Certificate of compliance with the order "2.1" as per DIN EN 10204
WB2	Werkszeugnis "2.2" nach DIN EN 10204 Factory certification "2.2" as per DIN EN 10204
Grundlage spezifischer Pruefung / Basis of specific Audit	
AP1	Abnahmepruefzeugnis "3.1" nach DIN EN 10204 Certificate of acceptance test "3.1" as per DIN EN 10204
AP2	Abnahmepruefzeugnis "3.2" nach DIN EN 10204 Certificate of acceptance test "3.2" as per DIN EN 10204

	FINISHED	RAW
> 500 ≤ 1000		
> 260 ≤ 500		
> 120 ≤ 260		
> 50 ≤ 120		
> 18 ≤ 50		
> 6 ≤ 18		
≤ 6		
Angle		

TABLE FOR GENERAL TOLERANCES THAT APPLY TO NOMINAL DIMENSIONS W/O SPECIFIED TOLERANCES ABOVE.

ARTICLE NO	ARTICLE INDEX	MATURITY LEVEL	CUSTOMER ARTICLE NO	CUST ART INDEX	MATERIAL COLOUR	WEIGHT (g) CALCULATED	WEIGHT (g) ACTUAL	VOLUME (cm³)
1732377A	a	Development				101.9	0	12.96

CAD SYSTEM	CATIA V5R30SP3	UNTOLERANCED DIMENSION	DIN 6930-2 - m
ALL DIMENSIONS, EXCEPT DIMENSIONS OF SEMI-FINISHED PRODUCTS, ARE FINISHED DIMENSIONS INCLUDING ALL HEAT AND SURFACE TREATMENTS!		SURFACE	
		TEST SPECIFICATION	see drawing / siehe Zeichnung
CONTROL GRADE	III		

UNLESS OTHERWISE SPECIFIED DIMENSIONS ARE IN MILLIMETERS	FINAL PROTO DRAWING NO.	NAME	STOP WASHER
FIRST ANGLE PROJECTION	REF.SPEC.	DRAWING NO.	1732377A
		DRAWING INDEX	a.00
GENERAL TOLRANCE: MACHINING / STAMPING	SCALE 1:1	MANUFACTURING NO.	
QUANTITY	CAD NO. 1732377A.003	CUSTOMER	VW
		PDM PROJECT NO.	P001588

APPROVED	CHECKED	ENGINEER	DRAWN
			Schupp, Benjamin
			01.09.2022

SumiRiko AVS Germany GmbH

SHEET 1 OF 1 | CATEGORY | A2

Information only
2022-09-01 15:17:56

The reproduction, distribution and utilization of this document as well as the communication of its contents to others without explicit authorization is prohibited. Offenders will be held liable for the payment of damages. All rights reserved in the event of the grant of a patent, utility model or design.

( ) REF. DIM. [ ] CONTROL DIM. < > FIXTURE DIM. BASIC DIM. TEST DIM. TEMPORARY DIM. > < MATERIAL CODE DIM. TO BE INSPECTED