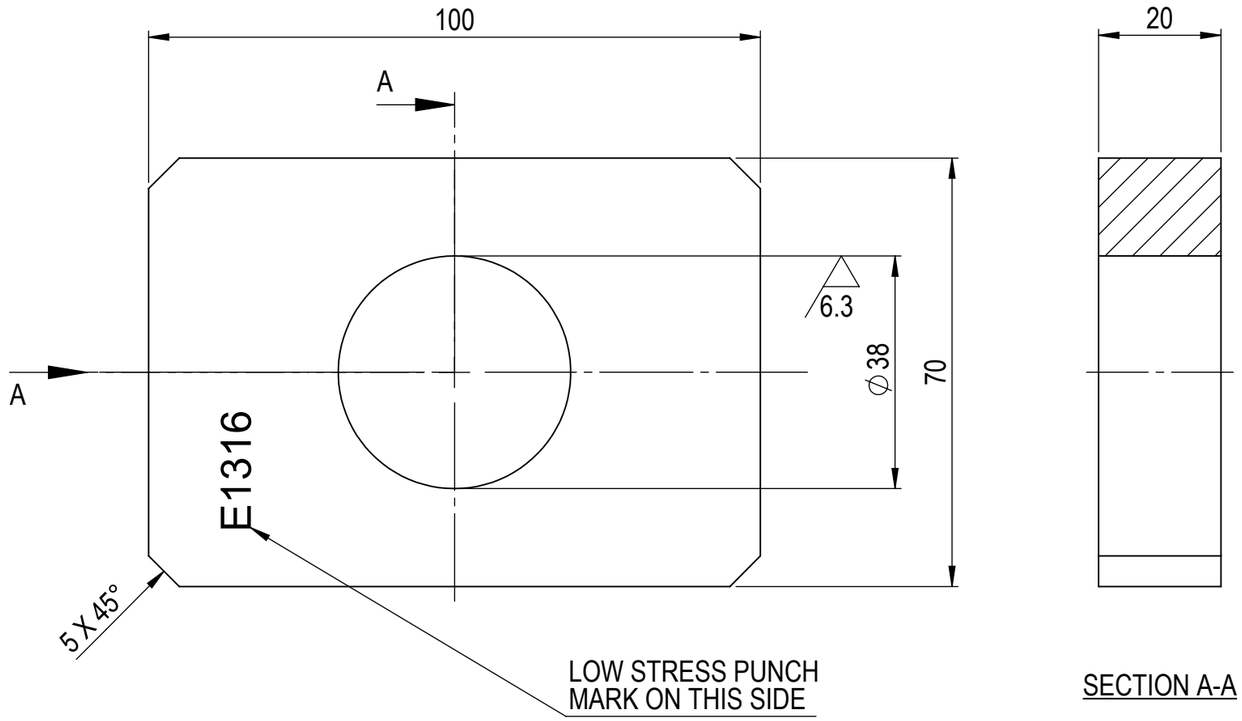





SECTION A-A

| THERMIC TREATMENT | SURFACE TREATMENT | MATERIAL | TOTAL WEIGHT (kg) |
|---|---|---|---|
| | ELECTROLYTIC ZINC PLATING | S355J2+N | 0.91 |

CJP ☐

| Rev. | Date | Description | Drawn by | Checked by | Approved by |
|---|---|---|---|---|---|
| | | | | | |
| | | | | | |
| | | | | | |
| 0 | 07/07/2021 | FIRST ISSUE | UT (Ros M.) | Ing. Buran C. | Ing. Picco E. |

6.3 [ ]

HOLES FOR SCREWES 6.3

UNQUOTED BEVELS = 0.5x45°

UNQUOTED RADIUS = 0.5

GENERAL MACHINING TOLERANCES – ISO 2768–1 Class mH

| LINEAR DIMENSION | | | | | | | | |
|---|---|---|---|---|---|---|---|---|
| GRADE | OVER 0.5 TO 3 | OVER 3 TO 6 | OVER 6 TO 30 | OVER 30 TO 120 | OVER 120 TO 400 | OVER 400 TO 1000 | OVER 1000 TO 2000 | OVER 1000 TO 2000 |
| m | ±0.1 | ±0.1 | ±0.2 | ±0.3 | ±0.5 | ±0.8 | ±1.2 | ±2 |

| CHAMFER AND RADIUS | | | | |
|---|---|---|---|---|
| GRADE | DESCRIPTION | OVER 0.5 TO 3 | OVER 3 TO 6 | OVER 6 |
| m | medium | ±0.2 | ±0.5 | ±1 |

| ANGULAR DIMENSIONS | | | | | | |
|---|---|---|---|---|---|---|
| GRADE | DESCRIPTION | UP TO 10 | OVER 10 TO 50 | OVER 50 TO 120 | OVER 120 TO 400 | OVER 400 |
| m | medium | ±1° | ±0°30' | ±0°20' | ±0°10' | ±0°5' |

CIMOLAI
Viale Pasteur, 49 - 00144 Roma (RM) - Italy
Tel. +39 0434 5581 - Fax +39 0434 361401
www.cimolai.com info@cimolai.com

Client: ESO

Object: TELESCOPE AND DOME IN CHILE

Descr.
SPACER
ALTITUDE RADIAL TRACKS
RADIAL TRACK - TRACK JOINT SPACER

MARK: E1316; PHASE: E110

QUANTITY 88

Scale: 1:1

| Job number | doc. type | doc. number | Rev. |
|---|---|---|---|
| 2016008 | DCD | E1316 | A0 |

FILE NAME: 2016008DCDE1316A0.dwg

ISO A3

This drawing is exclusive property of Cimolai S.p.A. and constitutes a confidential document. It is forbidden to exploit, divulge, disclose, use this drawing to the benefit of any third party and copy it in any manner whatsoever. All rights reserved.