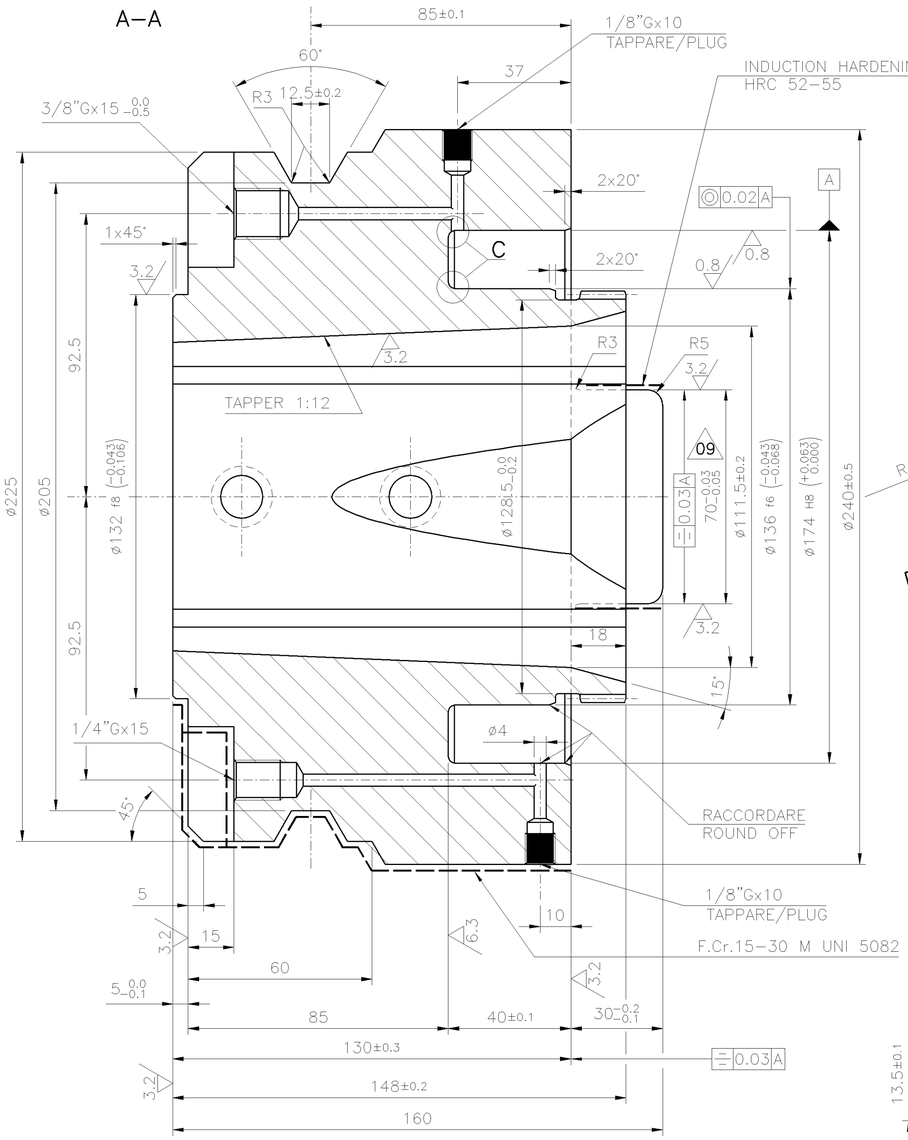

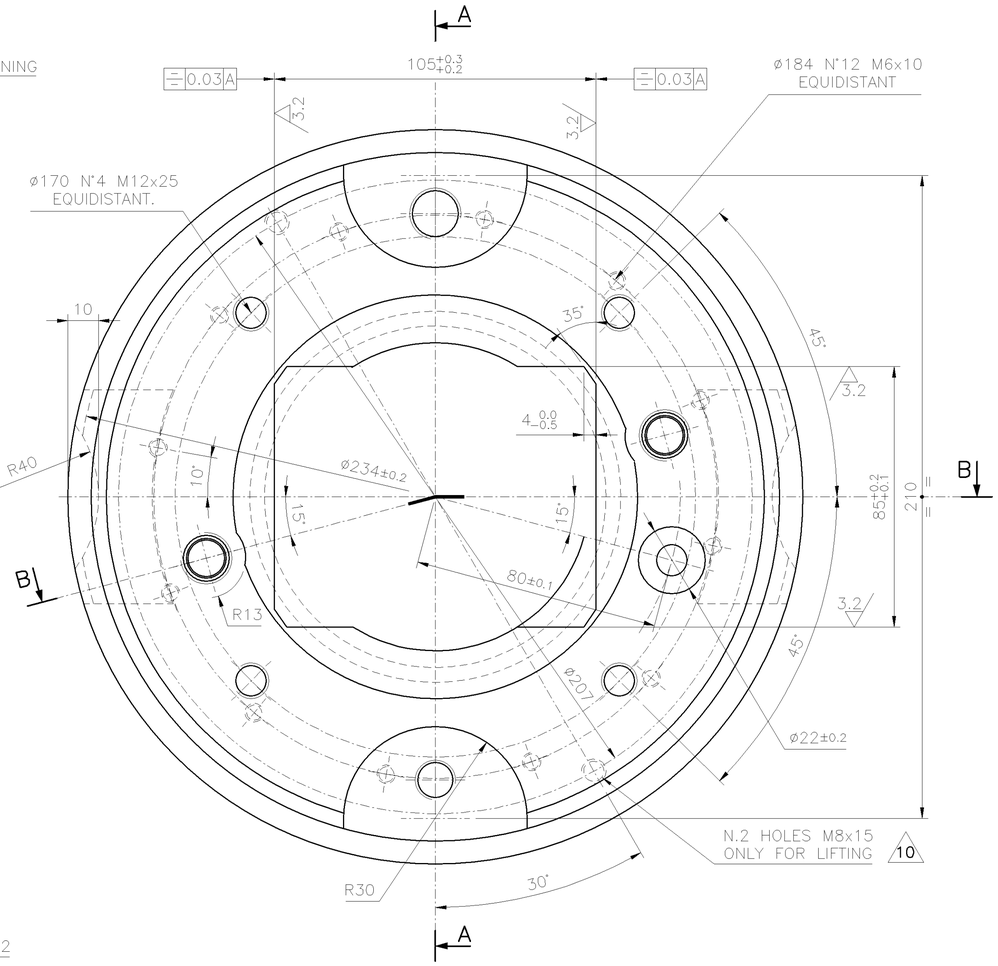

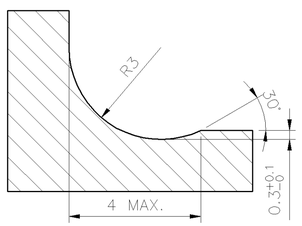

C (10:1)

B–B

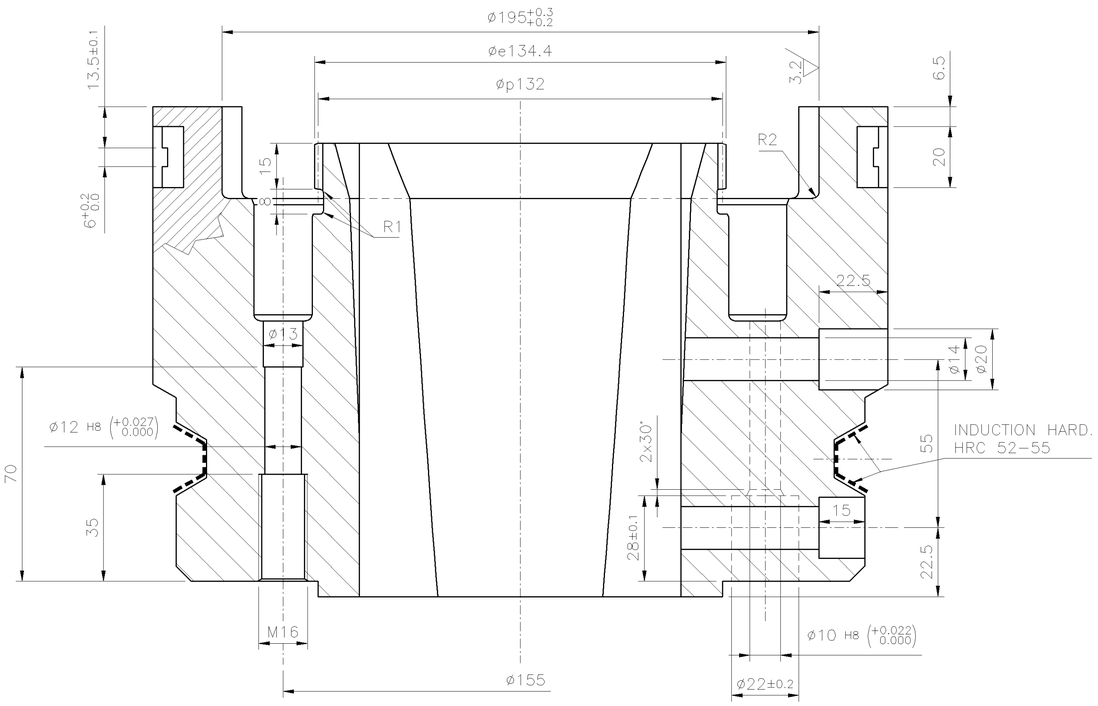

ARROTONDARE GLI SPIGOLI INTERESSATI AL TRATTAMENTO DI TEMPRA
ALL HARDENED EDGES MUST TO BE RADIATED

DENTATURA CILINDRICA DIRITTA RIBASSATA PER ALBERO
SHAFT STUB STRAIGHT SPUR GEARS

m	MODULO NORMALE	1.5	NORMAL MODULE
Z	NUMERO DI DENTI	88	NUMBER OF TEETH
α	ANGOLO DI PRESSIONE NORMALE	20°	NORMAL PRESS. ANGLE
d	DIAMETRO PRIMITIVO DI RIFERIMENTO	132	REFERENCE PITCH DIAMETER
da	DIAMETRO DI TESTA	134.4	TIP DIAMETER
dB1	DIAMETRO DI BASE	129	BASE DIAMETER
A	ADDENDUM	1.2	ADDENDUM
B	DEDENDUM	1.5	DEDENDUM
d	GIOCO SUI FIANCHI	0.3–0.5	SIDE CLEARANCE
Wn	MISURA WILDHABER	43.917	WILDHABER MEASURE
NR	SU NUMERO DENTI	10	ON NUMBER OF TEETH
NR	INGRANA CON PARTICOLARE NR	4.363808.N	MESHES WITH DETAIL NR.
a'	INTERASSE DI FUNZIONAMENTO	0	OPERATING CENTER DISTANCE

SPESSORE CORDALE TRA	10	DENTI	W	43.917
CHORDAL TICKNESS BETWEEN	...	TEETH	Gw	43.767
			Kw	43.667

Rev.	Date	Revisions description	Drawn by	Checked by	Approved by
10	20 May 2019	ADDED LIFTING HOLES	Coseano L	Martinel P	
09	16 Sep 2015	MODIFICATO TOLLERANZA DOVE INDICATO MODIFIED TOLERANCE WHERE INDICATED	Systec_k	Zampa L	
08A	26 Sep 2014	RIDISEGNATO A CAD. MOD QUOTA 92.5 ERA 95 REDRAWEN BY CAD MODIFIED DIMENSION 92.5 WAS 95	Zampa L	Carletti	
07	16 Nov 2013	AGGIORNATO MATERIALE	Zampa L	Carletti	
06	16 Nov 2004	ELIMINATO NOTA FUCINATI	Vergendo	Vergendo	
00	19 Dec 1988	EMISSIONE ISSUED	Canzutti	Canzutti	

Material 1 (where not indicated on drawing): C40E EN 10083–2 — State of supply Mat.1: — Danieli Supply Std.: 2.8.032 — Supply Class: B — Pattern DB:

Material 2: — State of supply Mat.2: — Danieli Supply Std.: — Supply Class: — Casting Code:

Material 1 Equivalent:

Heat Treatment — On Drawing Symbol, if required, ——:
BONIFICA+TEMPRA IND.&RINV.
DUREZZA A CUORE 210–250 HB
DUREZZA SUPERFICIALE 52–55 HRC
SPESSORE EFFICACE MIN 02.00 MM
QUENCH.&TEMP.+IND.HARD.&TEMP.
CORE HARDNESS 210–250 HB
SURFACE HARDNESS 52–55 HRC
EFFECTIVE DEPTH MIN 02.00 MM

Coating — On Drawing Symbol, if required, ——:
CROMATURA
F.Cr – UNI ISO 6158 015–030 micron
Tipo M
CHROMIUM PLATING
F.Cr – UNI ISO 6158 015–030 micron
Type M

Unquoted radius	Unquoted bevels	Dimensions without tolerance as per	Machinings	Prec.Class	Max. Welding Class
0.8 (mm)	1X45° (mm)	DANIELI STD 2.4.103	12.5 / 6.3 / 3.2 / 0.8	C	

Project Name:

DANIELI MORGÅRDSHAMMAR

Job nr:
Obtained from: 4.135971.N
Replaces:
Family code/Machine code: 40742
Weight (Kg): 30
J (Kgm²):

Title: CAPPELLO
CROSSHEAD

Scale: 1:2
Format: A1
Nr. of sheets: 001
Sheet: 001 Follow

DANIELI Shop number: 4.143569.A
Revision: 10
DANIELI dwg number:
Revision:

According to law DANIELI & C. SpA considers this document to be a company secret and therefore prohibits any person to reproduce or disclose it or make it known in whole or in part to other parties or to competitors without specific written authorization of DANIELI's Management

File nr 4143569A_001

COMPUTER AIDED DESIGN –A