A	B	C	D

GENERAL TOLERANCES

Angular dimension +-1° - Roundness range of tolerance from IT4 to IT11. Must be contained within half of dimensional tolerance.

MACHINED holes H14 shafts h14 linear values Js14 -- ROUGH holes H16 shafts h16 linear values Js16

SHEETS cutting/laser cutting/punching Js13 holes H13 bend[redacted] -- ALUMINIUM DI[redacted]11_1005_00

PLASTIC MATERIALS according to DIN 16901 -- CAST IR[redacted]1_1003_00

The general tolerances for ROUGH of plastic (DIN 16901) of aluminium (4011_1005_00), of CAST IRON (4011_1003_00), must be intended H for holes, h for shafts, Js for all the other dimensions

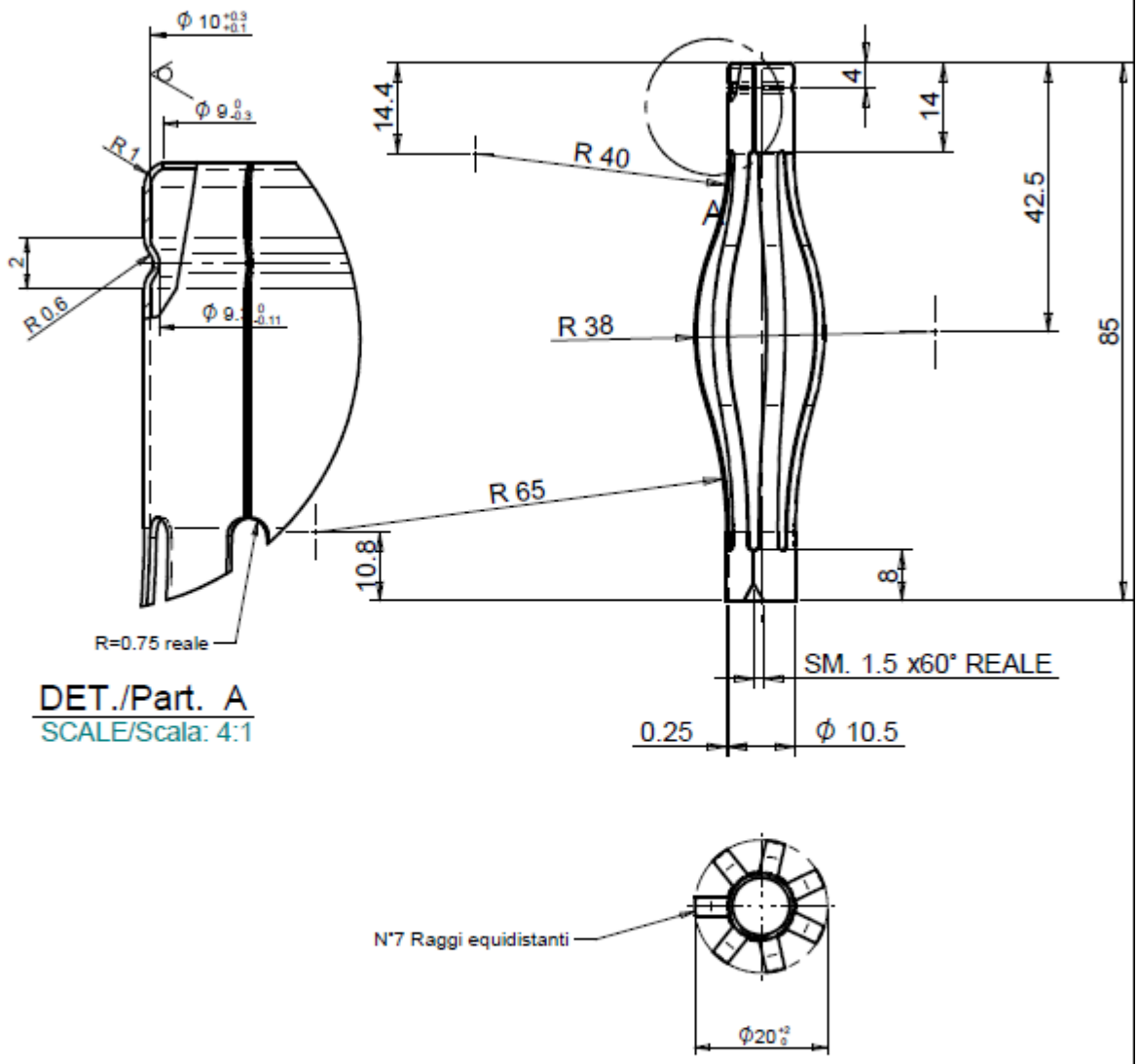

DET./Part. A
SCALE/Scala: 4:1

6.3 ( )

Bava max 0.04

CN03338	Mod.tratt.superf.	08/03/2019	1
Change	Modification details:	Date Mod:	IRP

Changes to previous release:		Obtain from:	Substitute:
Material:	C67S +LC UNI EN 10132-4	Code:	4032_6484_99
Supply state:	+LC: COLD ROLLED-TEMPERED GREY COLOR-NOT POLISHED	Dimensions:	
Thermic treat.:	QT - UNI 10990	Hardness(T):	HV 490 ±25
Surface treat.:		Hardness(S):	

DENOMINATION: MOLLA PER TUBETTI THAI DURABLE

[redacted]	D[redacted]	Date: 20/02/2019	26910_0346_1_3
	Mod.[redacted]	Sheet N°: 1/1	