GENERAL TOLERANCES
Angular dimension +-1° - Roundness range of tolerance from IT4 to IT11. Must be contained within half of dimensional tolerance.
MACHINED holes H14 shafts h14 linear values Js14 -- ROUGH holes H16 shafts h16 linear values Js16
SHEETS cutting/laser cutting/punching Js13 holes H13 bending/pressing Js14 -- ALUMINIUM DIE CASTING Savio Norm 4011_1005_00
PLASTIC MATERIALS according to DIN 16901 -- CAST IRON Savio Norm 4011_1003_00
The general tolerances for ROUGH of plastic (DIN 16901) of aluminium (4011_1005_00), of CAST IRON (4011_1003_00), must be intended H for holes, h for shafts, Js for all the other dimensions

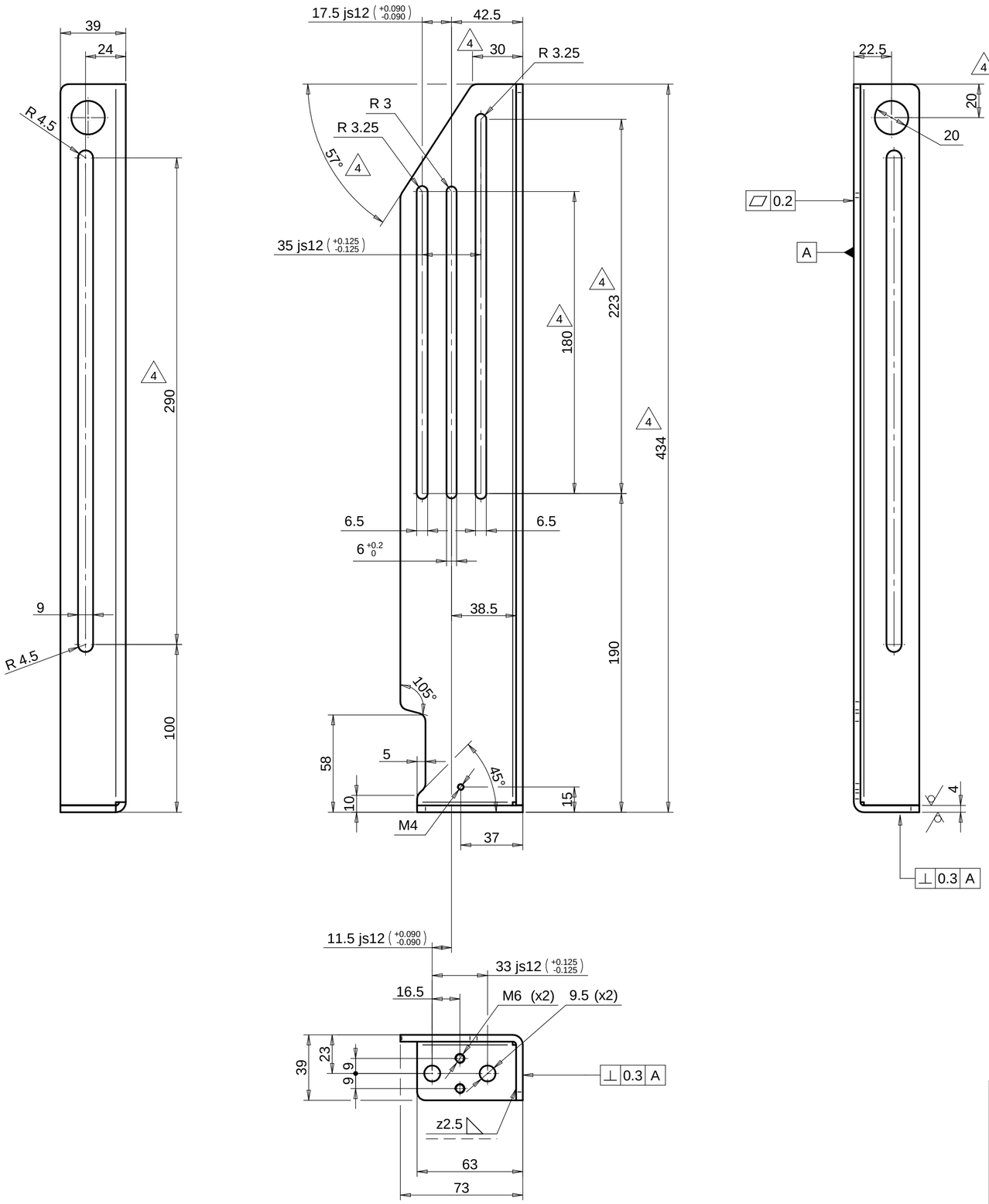

- BAVA MAX 0,04
- MAXIMUM BURR

- FORI FILETTATI RUGOSITÀ : 3.2
- THREADED HOLES ROUGHNESS

- RAGGI INTERNI DI PIEGA R=2.5
- INTERNAL BENDING RADIUSES

- RACCORDI NON QUOTATI R5
- FILLETS WITHOUT DIMENSION

6.3 (4 3.2)

CN06795				16/06/2023	00
Change		Modification details ☐:		Date Mod:	IRP
Changes to previous release △: MODIFIED SHAPE E7 AREA			Obtain from:	Substitute: 038593.3.0	
Material:	S235J2G3 +N UNI EN 10025		Code:	4032_6002_99	
Supply state:	+N: NORMALIZING ROLLING		Dimensions:		
Thermic treat.:			Hardness(T):		
Surface treat.:	Fe/Zn 8÷12 A HP UNI ISO 2081 free Cr VI		Hardness(S):		
Weigth:	1.2 kg	Volume: 155210.30 mm^3			

Approved

DENOMINATION: SUPPORTO CONTROPUNTA E PIEDINO

SAVIO	Draw.: Enrico Gaiotto	Date: 20/04/2023	038593.4.0
	Mod.: Enrico Gaiotto	Sheet N°: 1/1	
	App.: Stefano Malfante	Scale: 1:2	BRACKET

Reserved property of SAVIO MACCHINE TESSILI S.p.A. In accordance with the law, the contents of this drawing may not be re-produced or communicated to third parties.