GENERAL TOLERANCES
Angular dimension +-1° - Roundness range of tolerance from IT4 to IT11. Must be contained within half of dimensional tolerance.
MACHINED holes H14 shafts h14 linear values Js14 -- ROUGH holes H16 shafts h16 linear values Js16
SHEETS cutting/laser cutting/punching Js13 holes H13 bending/pressing Js14 -- ALUMINIUM DIE CASTING Savio Norm 4011_1005_00
PLASTIC MATERIALS according to DIN 16901 -- CAST IRON Savio Norm 4011_1003_00
The general tolerances for ROUGH of plastic (DIN 16901) of aluminium (4011_1005_00), of CAST IRON (4011_1003_00), must be intended H for holes, h for shafts, Js for all the other dimensions

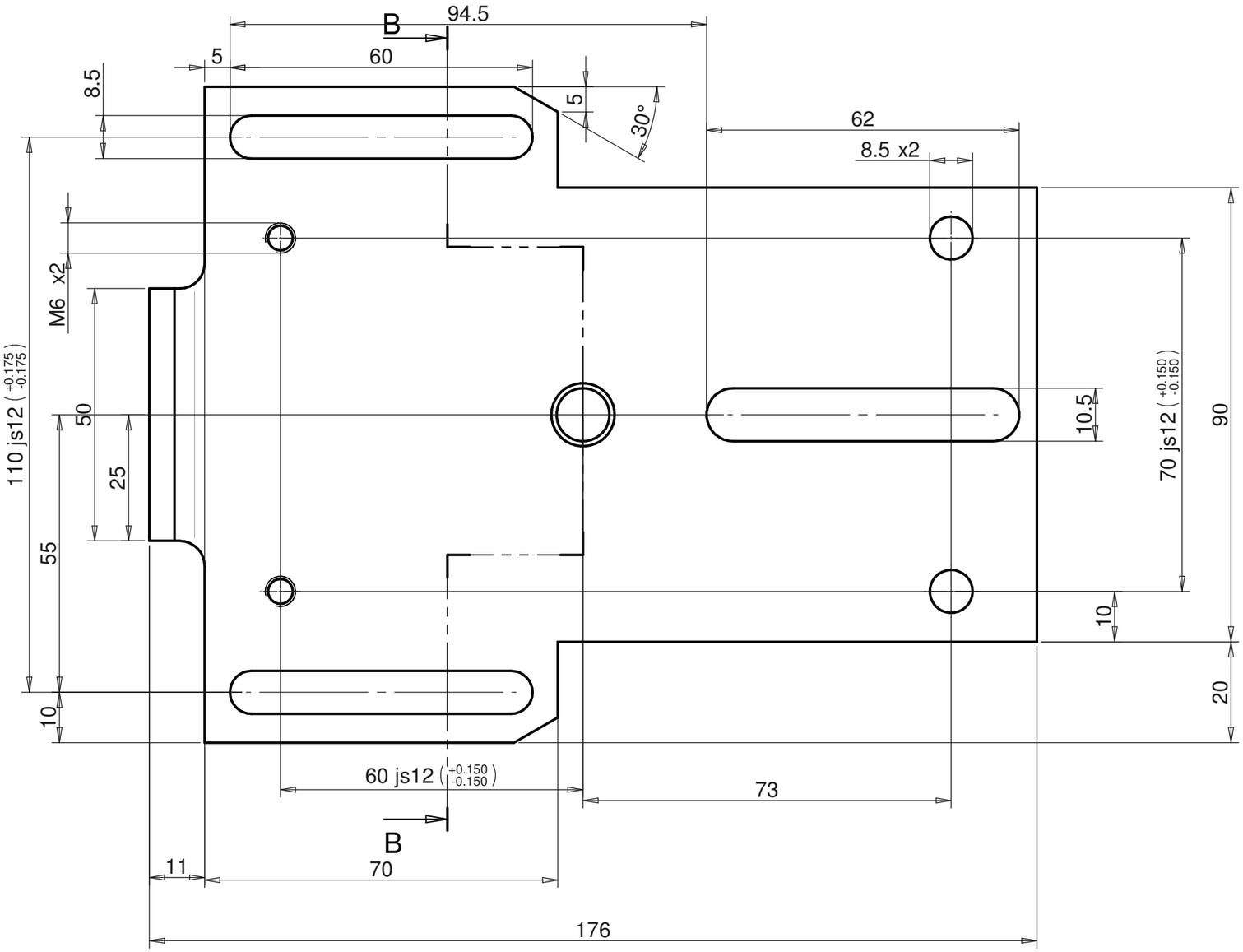

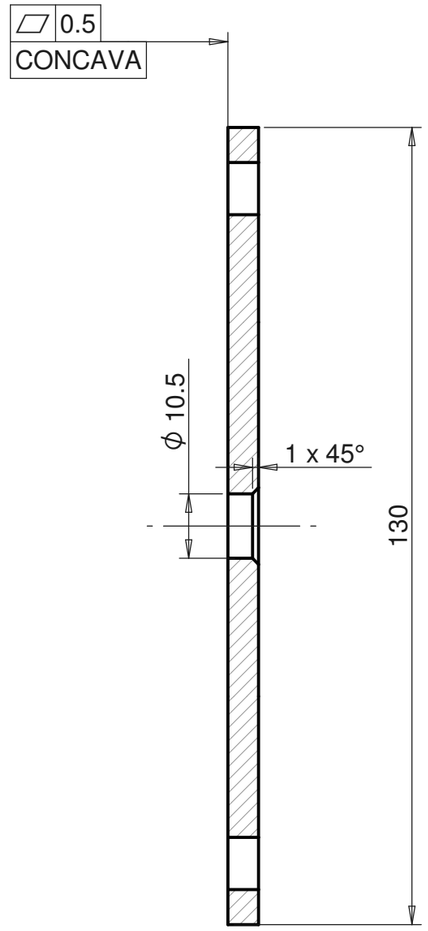

SECT./Sez. B-B

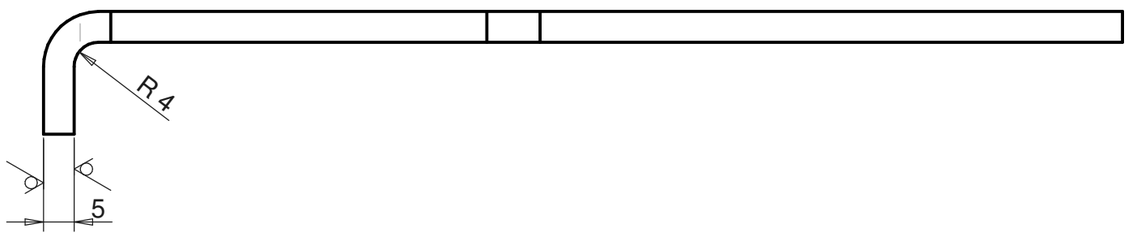

6.3 (3.2)

Bava max 0.04

CN05041		27/09/2021	00
Change	Modification details:	Date Mod:	IRP
Changes to previous release: MODIFICATO SPESSORE E FORO D.10.5	Obtain from:	Substitute: 042475.0.0	
Material: S235J2G3 +N UNI EN 10025	Code: 4032_6002_99		
Supply state: +N: NORMALIZING ROLLING	Dimensions:		
Thermic treat.:	Hardness(T):		
Surface treat.: Fe/Zn 8÷12 A HP UNI ISO 2081 free Cr VI	Hardness(S):		

DENOMINATION: PIASTRA TENDITORE PREPARATORE PROXIMA

Savio	Draw.: Marco Pivetta	Date: 16/07/2021	042475.1.0
	Mod. : Marco Pivetta	Sheet N°: 1/1	
	App. : Giuseppe Morini	Scale: 1:1	PLATE

Reserved property of SAVIO MACCHINE TESSILI S.p.A. In accordance with the law, the contents of this drawing may not be re-produced or communicated to third parties.