GENERAL TOLERANCES
Angular dimension +-1° - Roundness range of tolerance from IT4 to IT11. Must be contained within half of dimensional tolerance.
MACHINED holes H14 shafts h14 linear values Js14 -- ROUGH holes H16 shafts h16 linear values Js16
SHEETS cutting/laser cutting/punching Js13 holes H13 bending/pressing Js14 -- ALUMINIUM DIE CASTING Savio Norm 4011_1005_00
PLASTIC MATERIALS according to DIN 16901 -- CAST IRON Savio Norm 4011_1003_00
The general tolerances for ROUGH of plastic (DIN 16901) of aluminium (4011_1005_00), of CAST IRON (4011_1003_00), must be intended H for holes, h for shafts, Js for all the other dimensions

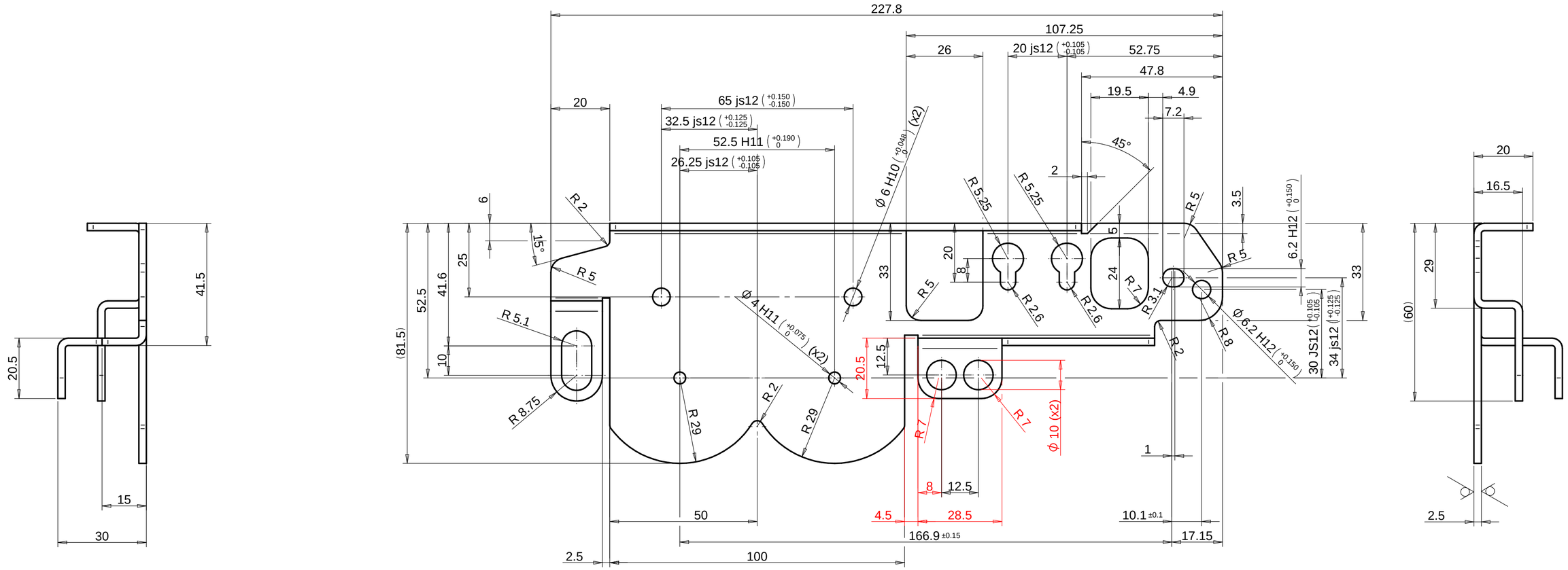

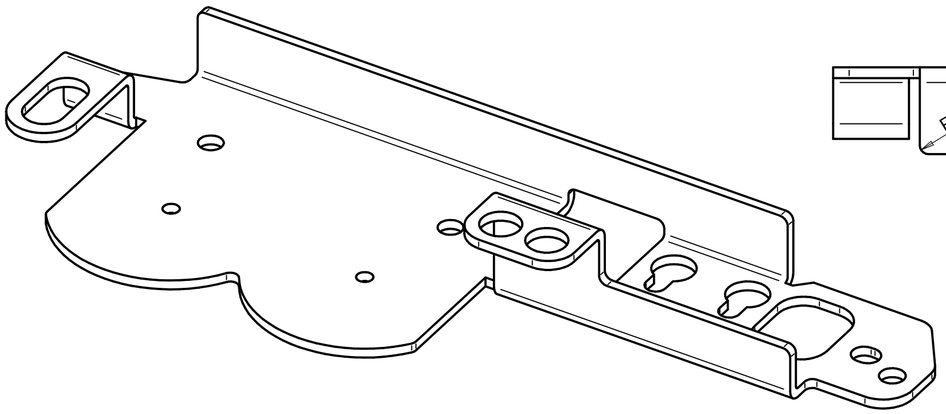

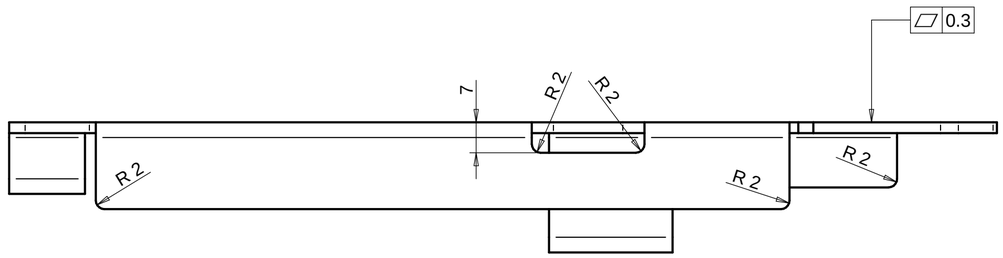

6.3 ( )

MAXIMUM BURR 0,04 / BAVA MAX 0,04
BENDING INTERNAL RADIUS/RAGGI INTERNI DI PIEGA R 1

CN05579	CHANGE HOLES DIAM. ..TO 10mm (H-5) AND RELATED RED COLORED DIMENSIONS	15/03/2022	02
Change	Modification details:	Date Mod:	IRP

Changes to previous release:	Added critical item	Obtain from:	Substitute: 048066.0.0
Material:	DC01+A-G UNI EN 10130	Code:	4032_6152_99
Supply state:	+A-G: SURFACE A FINISHING G	Dimensions:	
Thermic treat.:		Hardness(T):	
Surface treat.:	Fe/Zn 8÷12 A HP UNI ISO 2081 free Cr VI	Hardness(S):	

DENOMINATION: SUPPORTO X CILINDRO ISO FESTO E CILINDRO SAVIO

Savio	Draw.: Carmine Barbarito	Date: 08/02/2022	048066.1.0
	Mod.: Renzo Del Bianco	Sheet N°: 1/1	
	App.: Stefano Malfante	Scale: 1:1	SUPPORT

Reserved property of SAVIO MACCHINE TESSILI S.p.A. In accordance with the law, the contents of this drawing may not be re-produced or communicated to third parties.