GENERAL TOLERANCES
Angular dimension +-1° - Roundness range of tolerance from IT4 to IT11. Must be contained within half of dimensional tolerance.
MACHINED holes H14 shafts h14 linear values Js14 -- ROUGH holes H16 shafts h16 linear values Js16
SHEETS cutting/laser cutting/punching Js13 holes H13 bending/pressing Js14 -- ALUMINIUM DIE CASTING Savio Norm 4011_1005_00
PLASTIC MATERIALS according to DIN 16901 -- CAST IRON Savio Norm 4011_1003_00
The general tolerances for ROUGH of plastic (DIN 16901) of aluminium (4011_1005_00), of CAST IRON (4011_1003_00), must be intended H for holes, h for shafts, Js for all the other dimensions

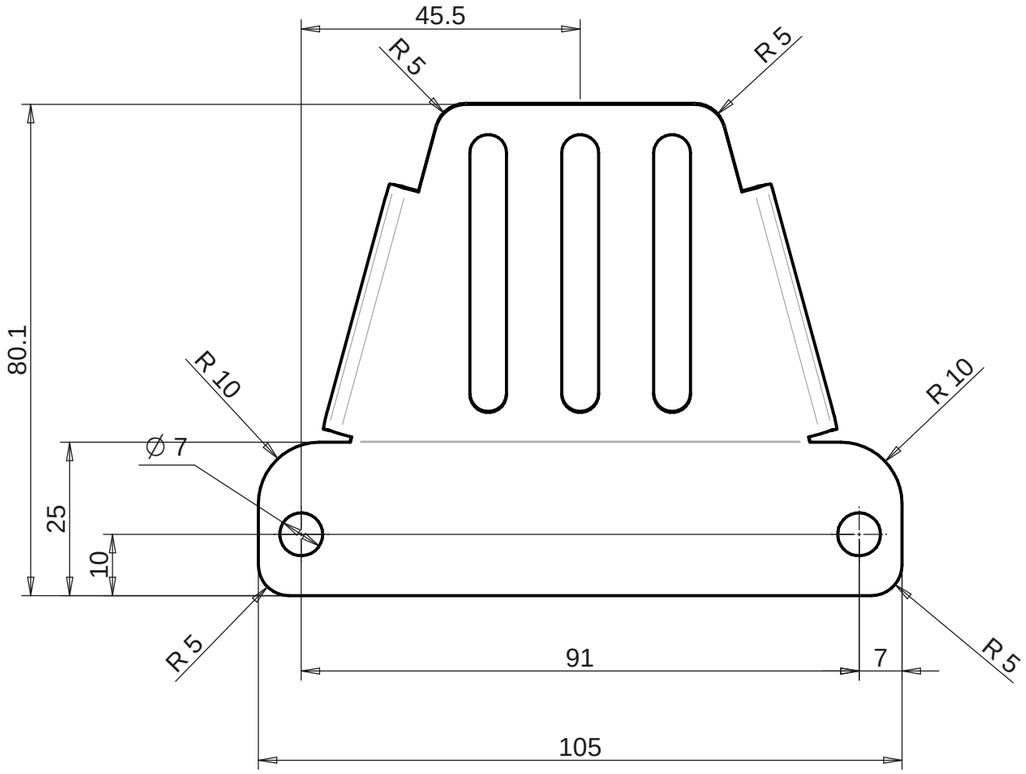

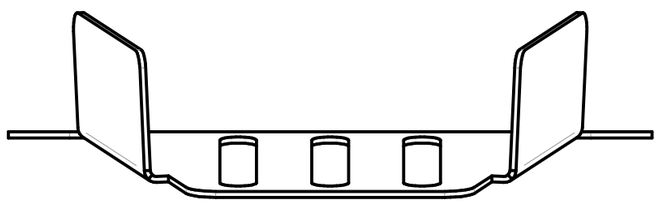

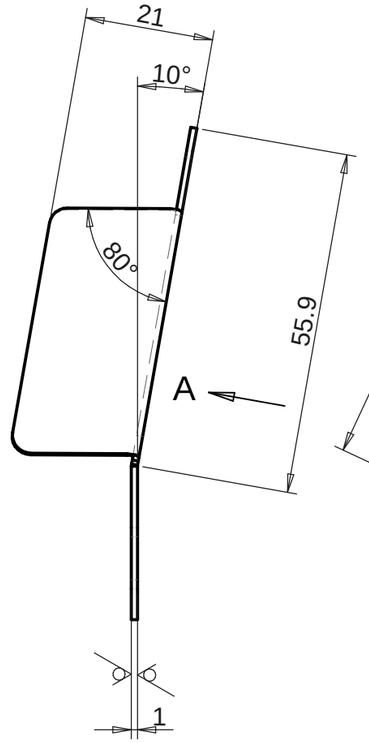

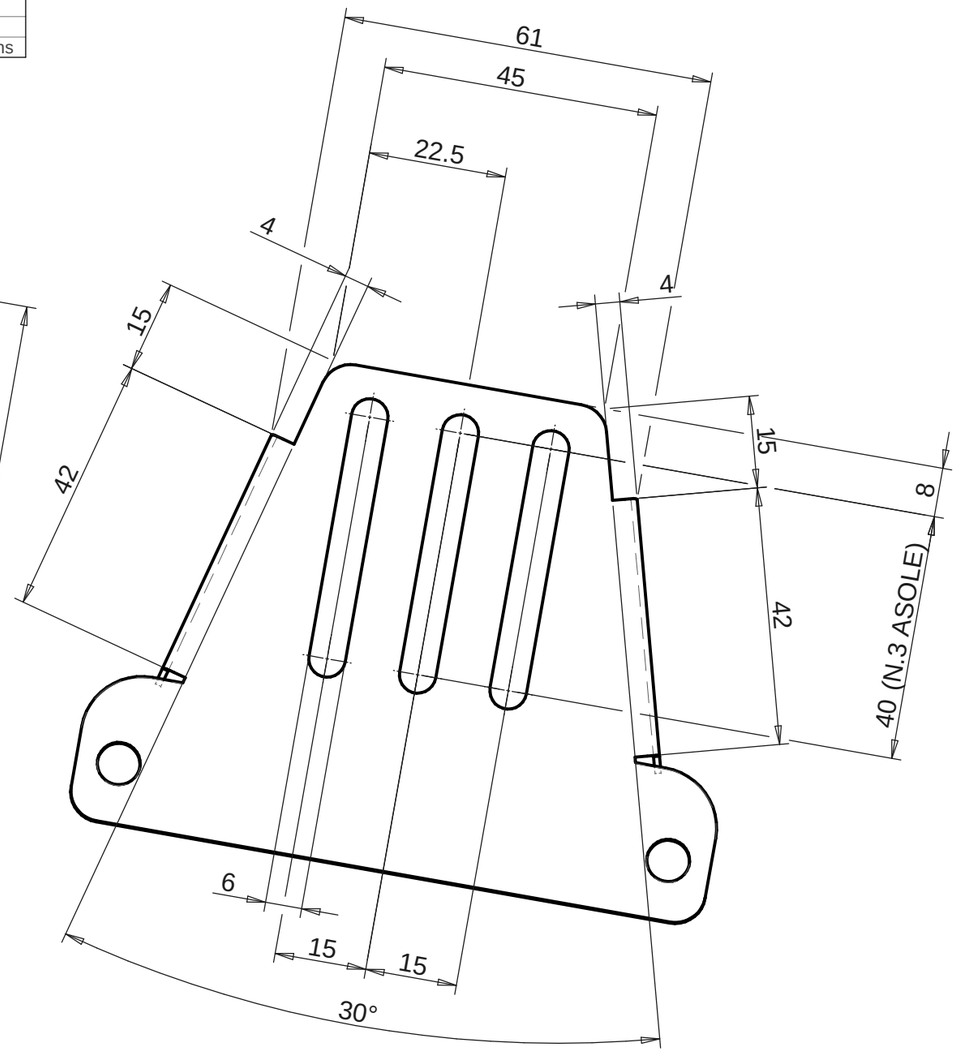

VIEW/Vista A

RAGGI NON QUOTATI R=3
UNDIMENSIONED RADIUS R=3
ESENTE DA BAVE
FREE BURRS

6.3

CN06151				03/10/2022	00
Change		Modification details:		Date Mod:	IRP
Changes to previous release:			Obtain from:	Substitute:	
Material:	S235J2G3 +N UNI EN 10025		Code:	4032_6002_99	
Supply state:	+N: NORMALIZING ROLLING		Dimensions:		
Thermic treat.:			Hardness(T):		
Surface treat.:	Cataphoresis epoxy graphite black RAL9011 4010-0003-00		Hardness(S):		

Approved

DENOMINATION: PIASTRINA ECONOMIZZATORE RICERCHE

SAVIO	Draw.: Michele Simonatto	Date: 25/07/2022	052757.0.0	
	Mod. : Gianni D'Andrea	Sheet N°: 1/1		
	App. : Stefano Malfante	Scale: 1:1	PLATE	

Reserved property of SAVIO MACCHINE TESSILI S.p.A. In accordance with the law, the contents of this drawing may not be re-produced or communicated to third parties.