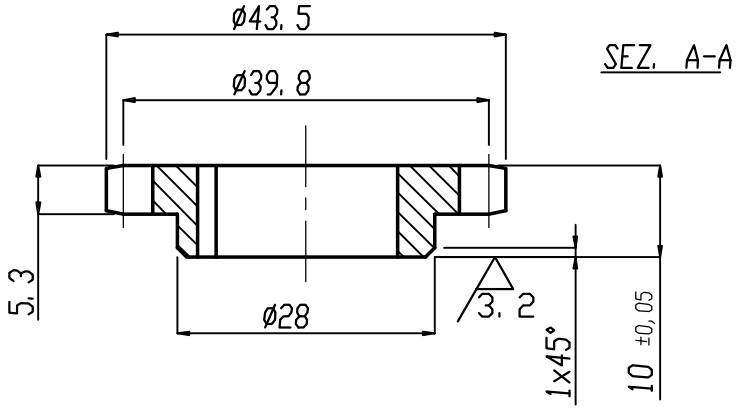

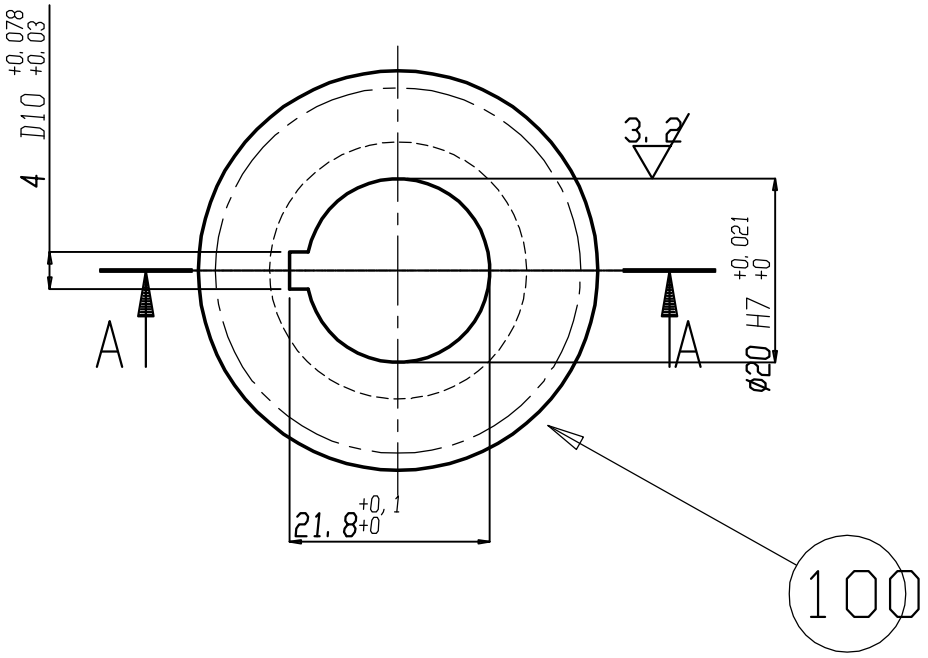

100	PIGNONE S 3/8*7/32 Z=13	1			