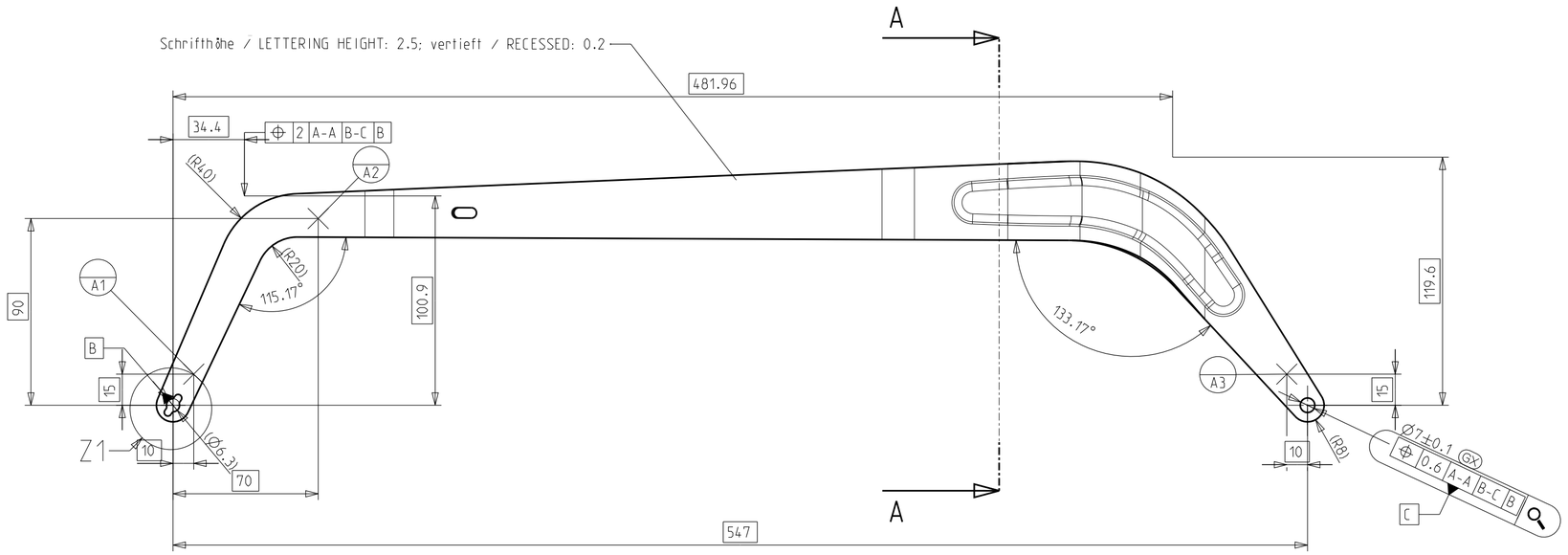

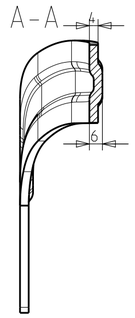

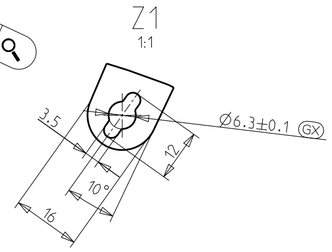

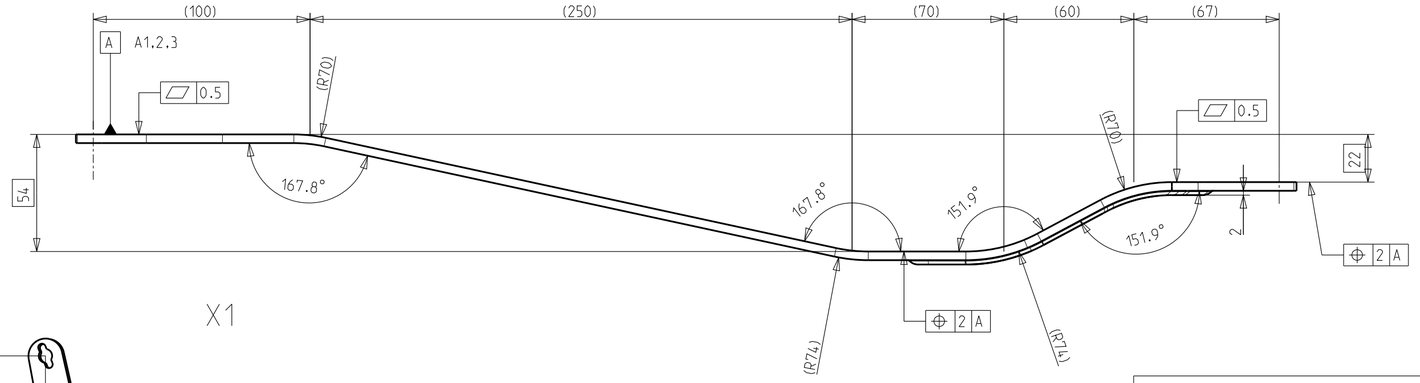

X1

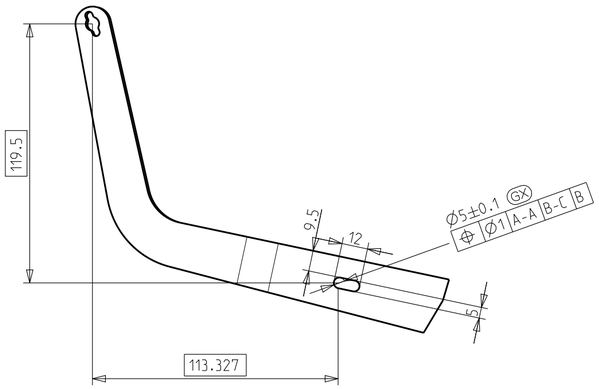

1:4

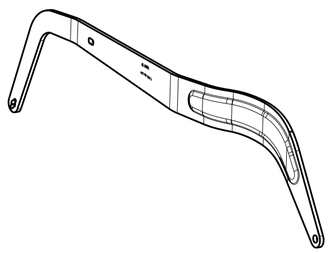

Allgemeintoleranzen GENERAL TOLERANCES:	DIN 6930 - m					
	Blechdicke bis / SHEETMETAL THICKNESS UP TO					
	Stanztoleranzen PRESSED TOLERANCES			Biegetoleranzen BENDING TOLERANCES		
	1	3	6	1	3	6
Länge / LENGTH						
bis / 6	±0.10	±0.15	±0.20	±0.2	±0.3	±0.4
UP TO 10	±0.15	±0.20	±0.25	±0.3	±0.4	±0.5
25	±0.20	±0.25	±0.30	±0.4	±0.5	±0.6
63	±0.25	±0.30	±0.40	±0.5	±0.6	±0.8
160	±0.30	±0.40	±0.50	±0.6	±0.8	±1.0
Radien / RADII						
bis / 6	±0.2	±0.3	±0.5	±0.4	±0.6	-
UP TO 10	±0.3	±0.4	±0.5	±0.6	±1.0	±1.2
25	±0.4	±0.5	±0.6	±1.0	±1.2	±1.5
63	±0.5	±0.6	±0.8	±1.2	±1.5	±2.0
Winkel an ebenen Stanzteilen ANGULAR DIMENSIONS OF FLAT STAMPINGS Nennmaß des kürzeren Schenkels NOMINAL SIZE OF THE SHORTER LEG						
bis / UP TO	10 ±1°30'	63 ±50'	160 ±25'			

CAD-Masse/CAD-MASS : 589.3 g

CAD-Dichte/CAD-DENSITY: 7.80 g/cm³

Ebene Bezugselemente werden nach Gauß gebildet
PLAIN DATUMS GENERATED BY LEAST SQUARE ZONE

Reduzierte CAD-Zeichnung / REDUCED CAD-DRAWING

Werkstoff / MATERIAL

Halbzeug / SEMIFINISHED PRODUCT

Oberfläche / SURFACE

Oberflächenzeichen
SURFACE SYMBOLS

Schutzvermerk ISO 16016 beachten
THE REPRODUCTION, DISTRIBUTION AND UTILIZATION OF THIS DOCUMENT AS WELL AS THE COMMUNICATION OF ITS CONTENTS TO OTHERS WITHOUT EXPLICIT AUTHORIZATION IS PROHIBITED. OFFENDERS WILL BE HELD LIABLE FOR THE PAYMENT OF DAMAGES. ALL RIGHTS RESERVED IN THE EVENT OF THE GRANT OF A PATENT, UTILITY MODEL OR DESIGN.

Werkstückkanten / EDGES ISO 13715

PROJECTION 1

DIMENSIONS IN MM

Dokumentstatus (leeres Feld = kein offizieller Stand)
DOCUMENT STATUS (EMPTY FIELD = NO OFFICIAL STATE)

Konstrukteur / DESIGNER (Revision 1)

Änderungsauftr./CHANGE ORDER

Benennung
PART-NAME

Teile-Nr.
PART-NO.

SAP Teil/PART
Revision

Maßstab / SCALE	Original	Blatt/SHEET	Für Lieferant / FOR SUPPLIER
1:2	DIN A2	1	