GENERAL TOLERANCES
Angular dimension +-1° - Roundness range of tolerance from IT4 to IT11. Must be contained within half of dimensional tolerance.
MACHINED holes H14 shafts h14 linear values Js14 -- ROUGH holes H16 shafts h16 linear values Js16
SHEETS cutting/laser cutting/punching Js13 holes H13 bending/pressing Js14 -- ALUMINIUM DIE CASTING Savio Norm 4011_1005_00
PLASTIC MATERIALS according to DIN 16901 -- CAST IRON Savio Norm 4011_1003_00
The general tolerances for ROUGH of plastic (DIN 16901) of aluminium (4011_1005_00), of CAST IRON (4011_1003_00), must be intended H for holes, h for shafts, Js for all the other dimensions

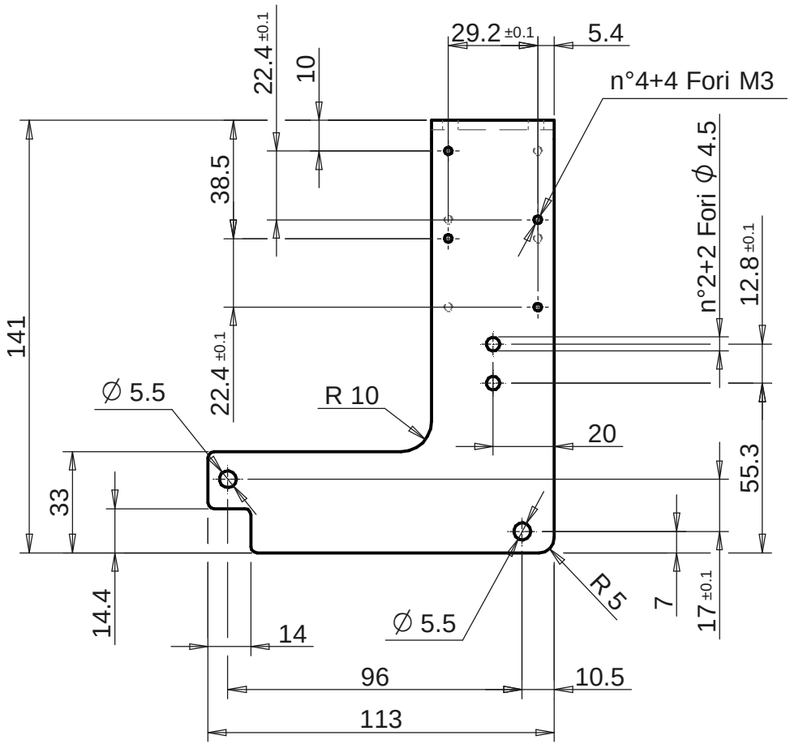

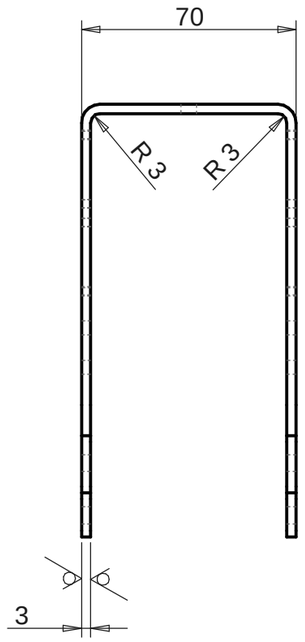

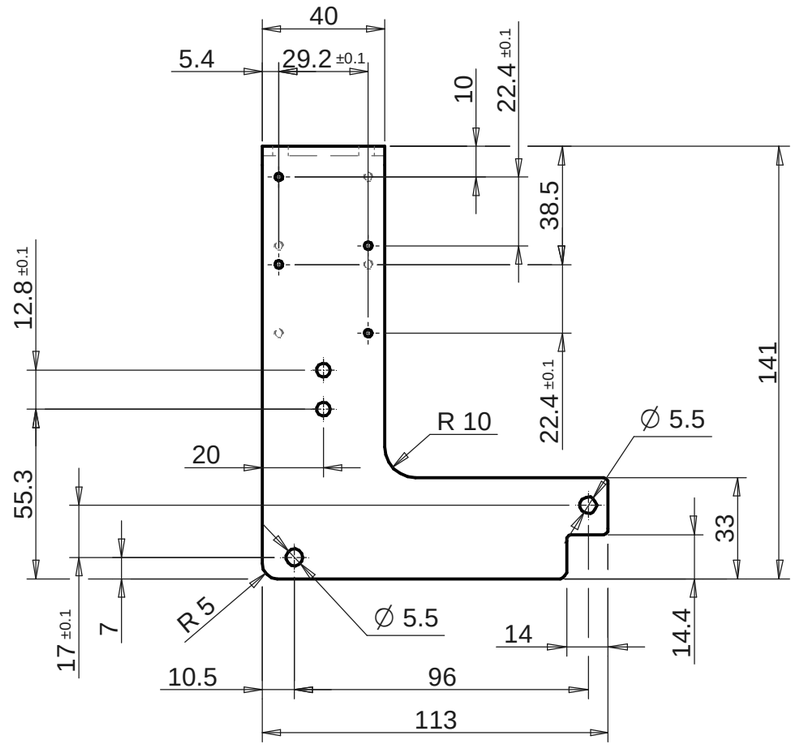

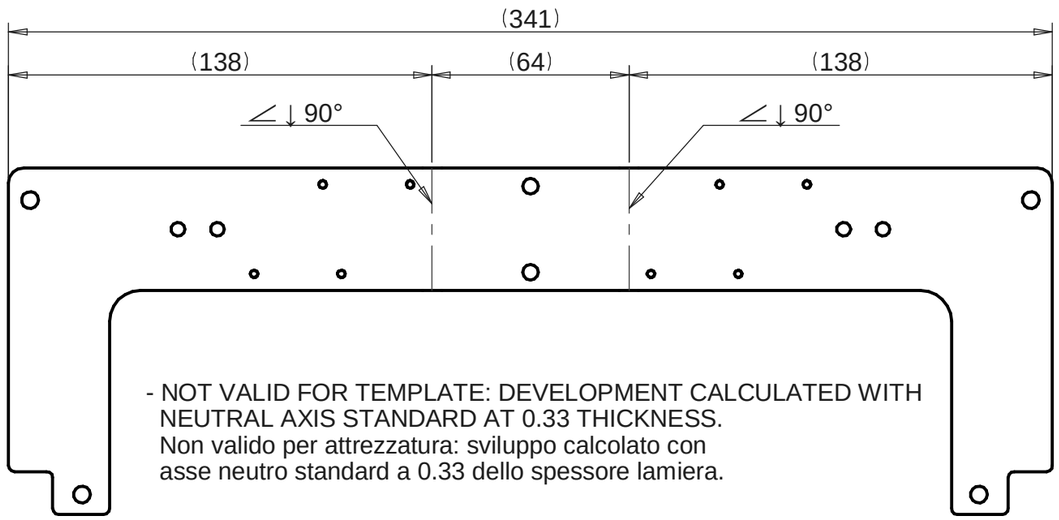

- NOT VALID FOR TEMPLATE: DEVELOPMENT CALCULATED WITH NEUTRAL AXIS STANDARD AT 0.33 THICKNESS.
  Non valido per attrezzatura: sviluppo calcolato con asse neutro standard a 0.33 dello spessore lamiera.

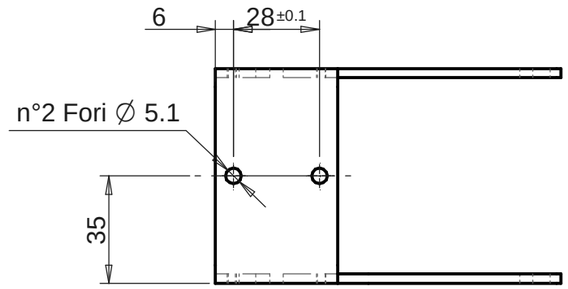

- FREE OF BURRS AND EDGES/Esente da bave e spigoli vivi
- PROTECT THREAD HOLES AND TOLERANCE HOLES FROM PAINT
  Proteggere i fori filettati e quelli con tolleranza da verniciatura
- BENDING INTERNAL RADIUS/Raggi interni di piega: R 3
- UNDIMENSIONED RADIUS /Raggi non quotati: R 2

6.3 (3.2)

CN06285	NEW EDITION	13/09/2023	00
Change	Modification details ☐:	Date Mod:	IRP

Changes to previous release △:		Obtain from:	Substitute:
Material:	S235J2G3 +N UNI EN 10025	Code:	4032_6002_99
Supply state:	+N: NORMALIZING ROLLING	Dimensions:	
Thermic treat.:		Hardness(T):	
Surface treat.:	Fe/Zn 8÷12 A HP Dehydrogenated 220°C UNI ISO 2081 free Cr VI	Hardness(S):	
Weigth: 0.4 kg	Volume: 0 m^3		

DENOMINATION: ELECTRO-VALVE SUPPORT SPINNING HEAD LYBRA

Draw.:	Date: 22/11/2022	054617.0.0	
Mod. :	Sheet N°: 1/1		
App. :	Scale: 1:2	BRACKET	

ced or communicated to third parties.