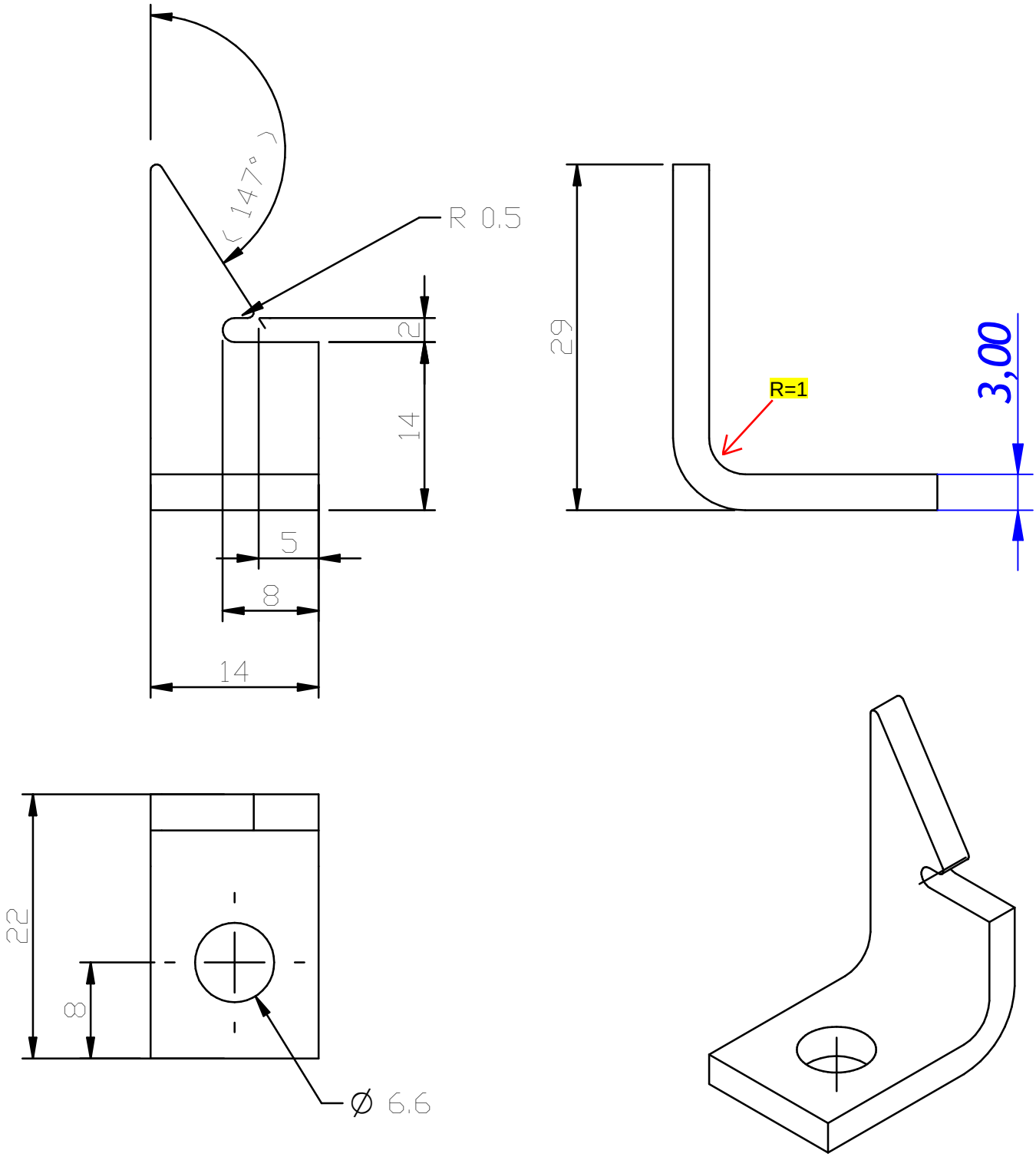

19/10/2020	MVE	22/10/2020	CHO	EDITION ORIGINALE
DATE CREATION CREATION DATE	DESSINE PAR DRAWN BY	DATE VERIFICATION CHECKED DATE	VERIFIE PAR CHECKED BY	DESIGNATION

MATIERE / MATERIAL	PROTECTION / FINISH	TOLERANCES GENERALES GENERAL TOLERANCES	FORMAT	ECHELLE / SCALE	MASSE / WEIGHT
ZINCATA		ISO 2768-1 mK	A4	2:1	0.01 Kg

S-ENS CHASSIS INJECTEUR
ATTACHE JOINT / BOUND JOINT

Ros s.r.l.
Via Crosera, 42 - Zona Industriale
33082 AZZANO DECIMO (PN)
Tel. 0434 633318 r.a. - Fax 0434 640639
C.F. e P. IVA 01278530934

NUMERO / NUMBER	GAMME / RANGE	CONFIGURATION	FOLIO	N° DE PLAN / DRAWING NUMBER	REV.
S998		AA	1/1	IF0000863	