| GENERAL TOLERANCES FOR MACHINED MEASURES ISO 2768-mK | | |
|---|---|---|
| NOMINAL MEASURE | | TOLERANCES |
| OVER | MAX | |
| 0.5 | 3 | ±0.1 |
| 3 | 6 | ±0.1 |
| 6 | 30 | ±0.2 |
| 30 | 120 | ±0.3 |
| 120 | 400 | ±0.5 |
| 400 | 1000 | ±0.8 |

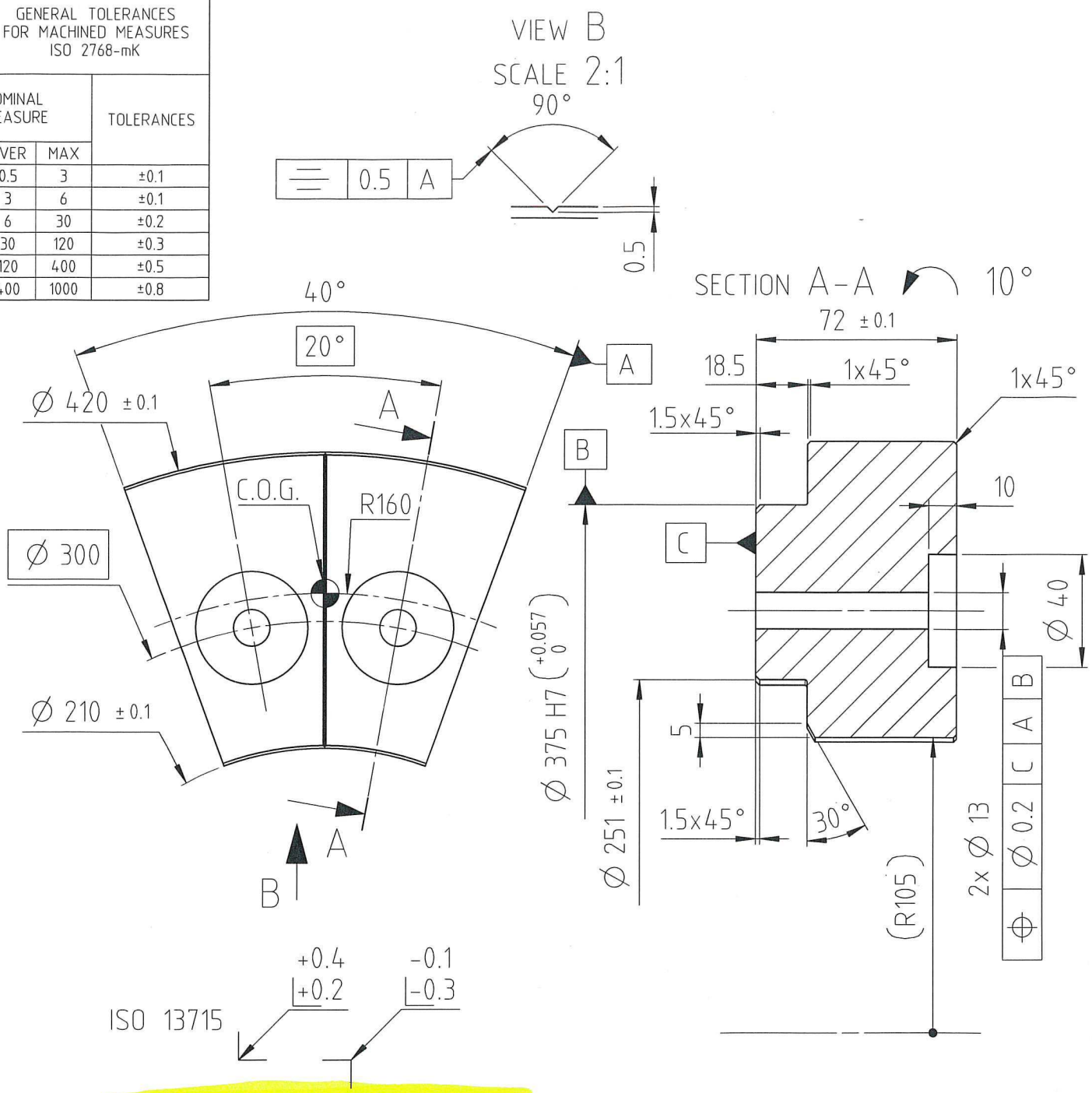


| QTY | SEQ NO | Material ID | Material Name / Dimension, Occ | Standard or Drawing ID | Basic Material / Material Standard | Net Weight | Gross Weight |
|---|---|---|---|---|---|---|---|
| 1 | 1 | 001240158 | STEEL PLATE 150x115x75 | EN 10029 | S235J2 EN 10025-2 | 10.12 | |

# TUNING MASS
## FOR INTERMEDIATE SHAFT
## TUNABLE BALANCING SYSTEM

| | | | |
|---|---|---|---|
| S235J2 | EN 10025-2 | | Net Weight 5.48 |
| Size A4 | Page 1/1 | Material ID | PABA028719 |
| Drawing ID DAAF488060 | | | Drawing Rev – |

Approved

DID - DIMENSIONAL DRAWING - Confidential