N°	QTE	DESIGNATION	BOUNDING BOX LENGTH	BOUNDING BOX WIDTH	SHEET METAL THICKNESS	WEIGHT (KG)
1	1	SHEET	238	94.8	1.5	0.170
2	2	PEM SP-M4-1 ZI - SELF-CLINCHING NUTS	0	0	0	0.001

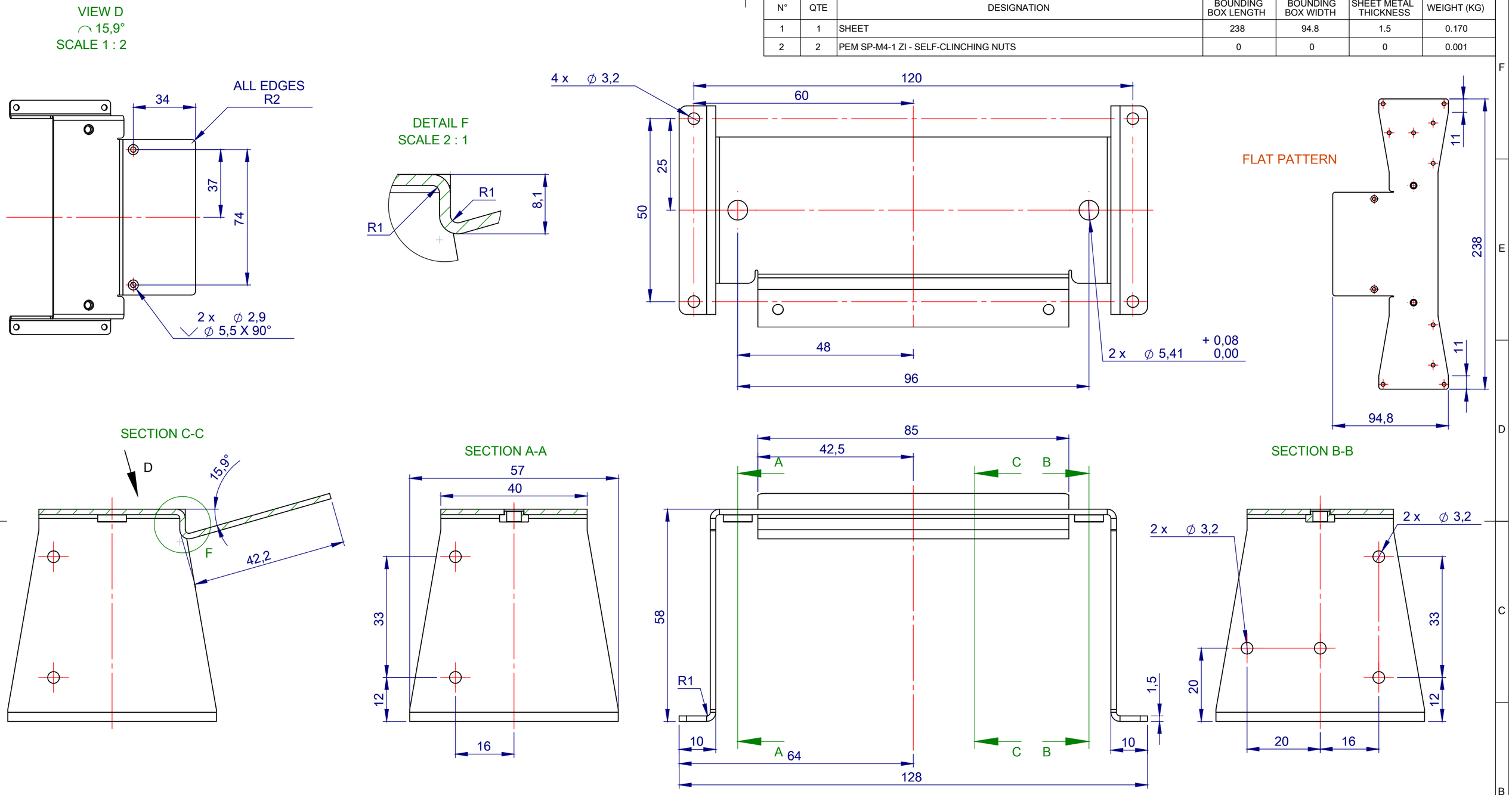

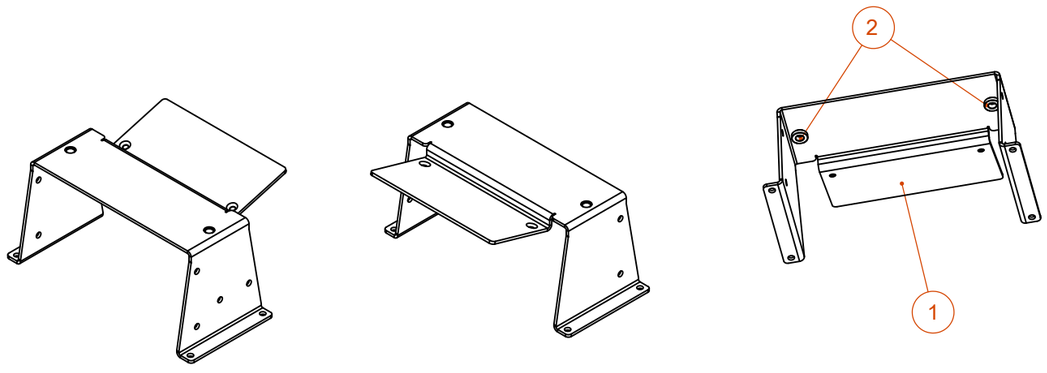

REV	MODIFICATIONS	ZONE	DATE	REV. BY	CHECKED BY
/	FIRST ISSUE		28/02/2023	COLLOMBET Audric	FREY Bruno

DESCRIPTION

MOTHERBOARD SUPPORT

DESCRIPTION

MATERIAL / MATERIAL			CUSTOMER / KUNDEN	
DC 04			/	
SURFACE TREATMENT / OBERFLÄCHENBEHANDLUNG	WEIGHT / GEWICHT (KG)	DESIGNED BY / GESTALTET VON	SCALE / MAßSTAB	FORMAT / FORMAT
ZINC	0.171		1:1	A3
		CHECKED BY / GEPRÜFT DURCH	ITEM NUMBER ARTIKELNUMMER	REV
		GENERAL TOLERANCES / ALLGEMEINTOLERANZEN		
		DIN ISO 2768-mK		/