GENERAL TOLERANCES
Angular dimension +-1° - Roundness range of tolerance from IT4 to IT11. Must be contained within half of dimensional tolerance.
MACHINED holes H14 shafts h14 linear values Js14 -- ROUGH holes H16 shafts h16 linear values Js16

The general tolerances for ROUGH of plastic (DIN 16901) of aluminium (4011_1005_00), of CAST IRON (4011_1003_00), must be intended H for holes, h for shafts, Js for all the other dimensions

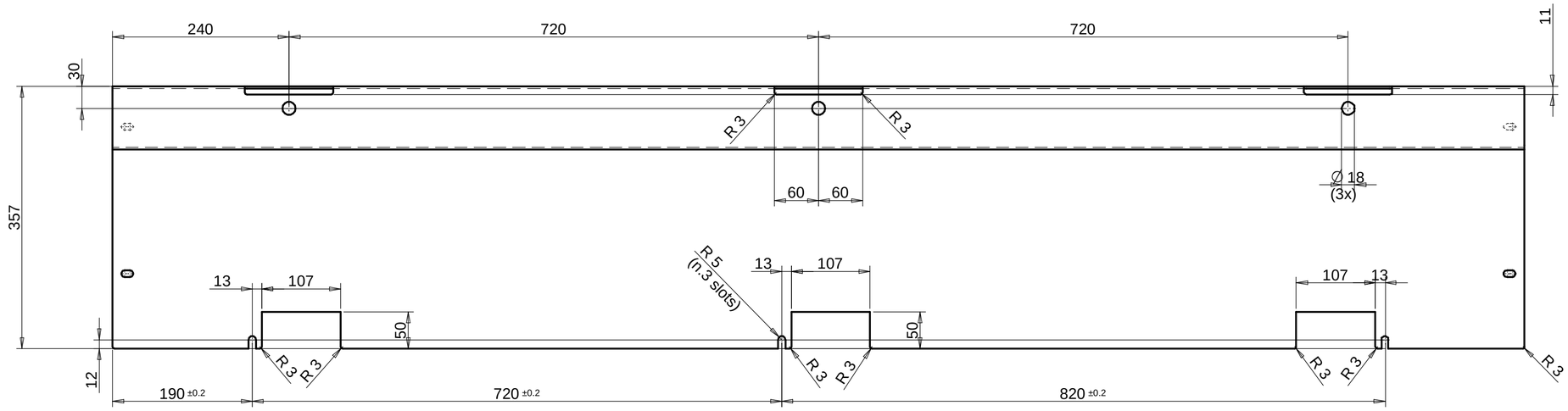

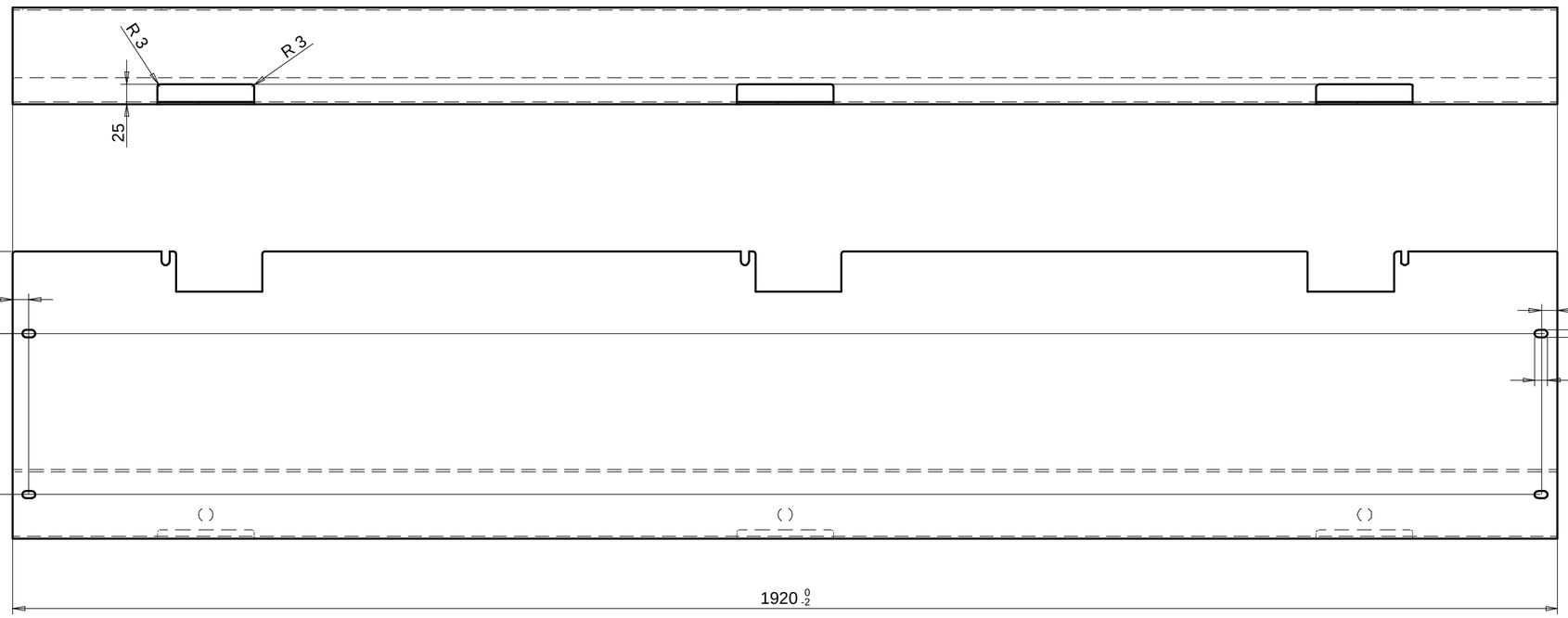

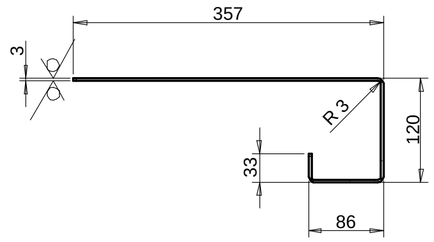

MATERIALE: lamiera antiscivolo (vedi immagine)
in acciaio Sp.3 mm

6.3 - FREE OF BURRS AND EDGES/Esente da bave e spigoli vivi

CN06750	n.3 holes not through	29/05/2023	01
Change	Modification details □:	Date Mod:	IRP

Changes to previous release △:		Obtain from:	Substitute:
Material:	LAMIERA BUGNATA S235J2G3 UNI 4630 ZINCATA AZZ.BRILLANTE	Code:	008118.0.0
Supply state:	LAMINATO A CALDO	Dimensions:	Sp=3(+-0,5)
Thermic treat.:		Hardness(T):	
Surface treat.:	Fe/Zn8c2c UNI ISO 2081 free Cr VI	Hardness(S):	
Weigth: 25.5 kg	Volume: 3260809.58 mm^3		

DENOMINATION: PEDANA LYBRA

Draw.:	Date: 30/01/2023	055503.0.0	
Mod. :	Sheet N°: 1/1		
App. :	Scale: 1:5	SECTION	

ced or communicated to third parties.