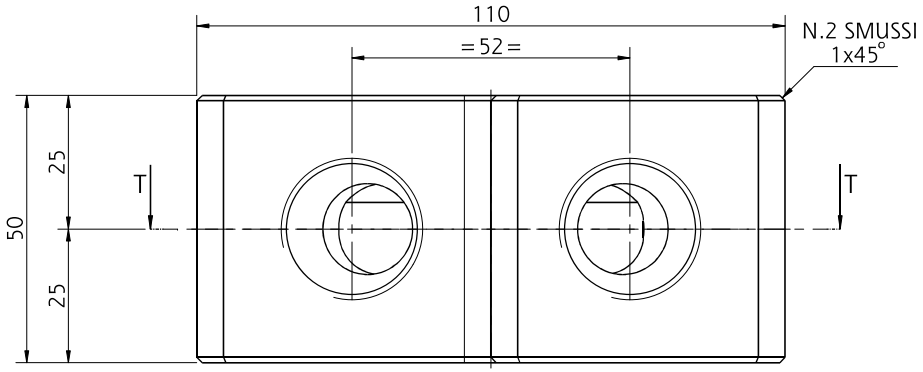

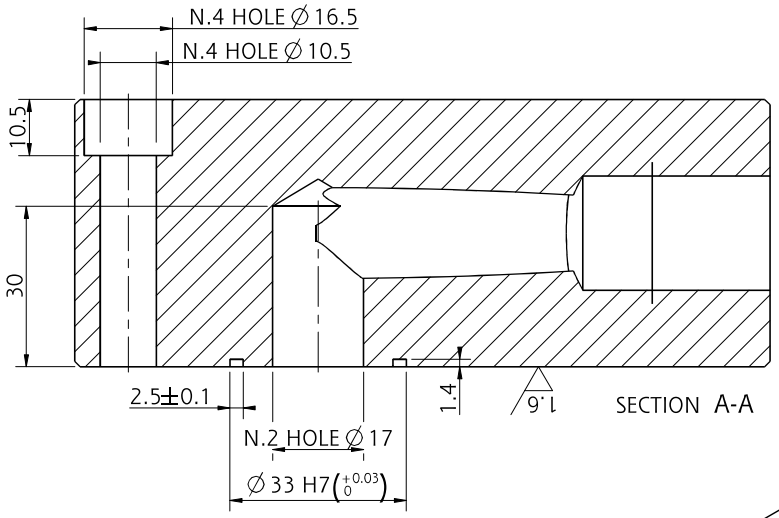

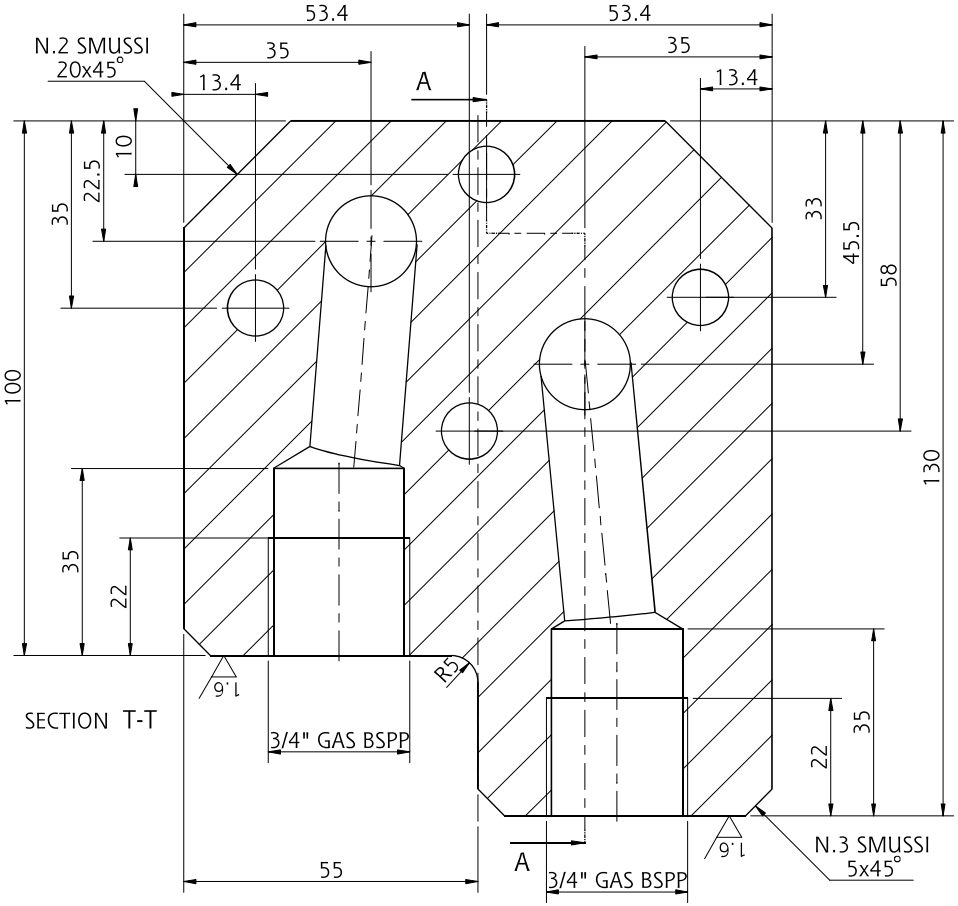

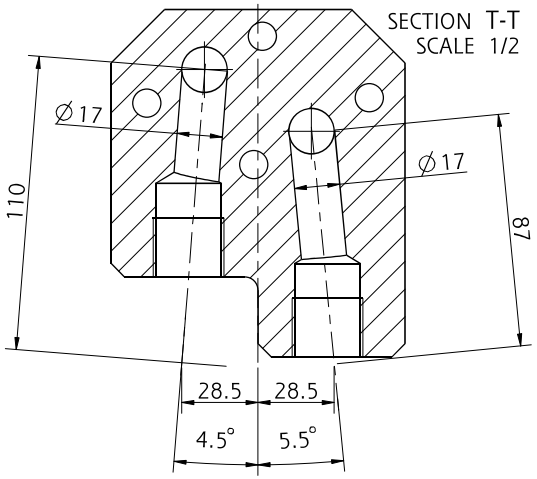

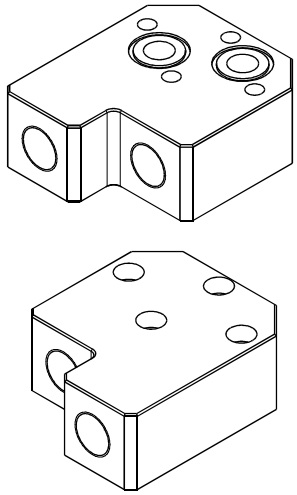

3.2 [1.6]

REV.	DATE	DESCRIPTION	DRAWN BY	CHECKED BY	APPROVED BY
2	10/12/20	MODIFIED THICKNESS OF THE TREATMENT	L.P.	C.T.	N.S.
1	30/12/19	MODIFIED DIAMETER OF TCEI SCREW	L.P.	C.T.	N.S.
0	03/04/19	FIRST ISSUE	L.P.	C.T.	N.S.

REVISIONS

Linear measures	Tolerance
< 120	± 0.15
120 < 400	± 0.2
400 < 1000	± 0.3
1000 < 2000	± 0.5
2000 < 4000	± 1
4000	± 1.5

General tolerances ISO 2768 - f H

General Tol. Angles Rough part ± 1 Mach. part ± 0.5

dim

dim da verif.

Description: MOTOR ADAPTER UP

Material: C40

Treat: Nichelatura opaca 5-8 µm

Weight: 4.3 kg

Scale: 1/1

Sheet: 1 of 1

MILOCCO srl mechanical solutions

Part No: PF16322005

Drw No: PF16322005

Il presente disegno è proprietà aziendale. La Società tutelerà i propri diritti ai termini di legge. This drawing is the property of Goriziane, who will safeguard its rights according to the law.

A3