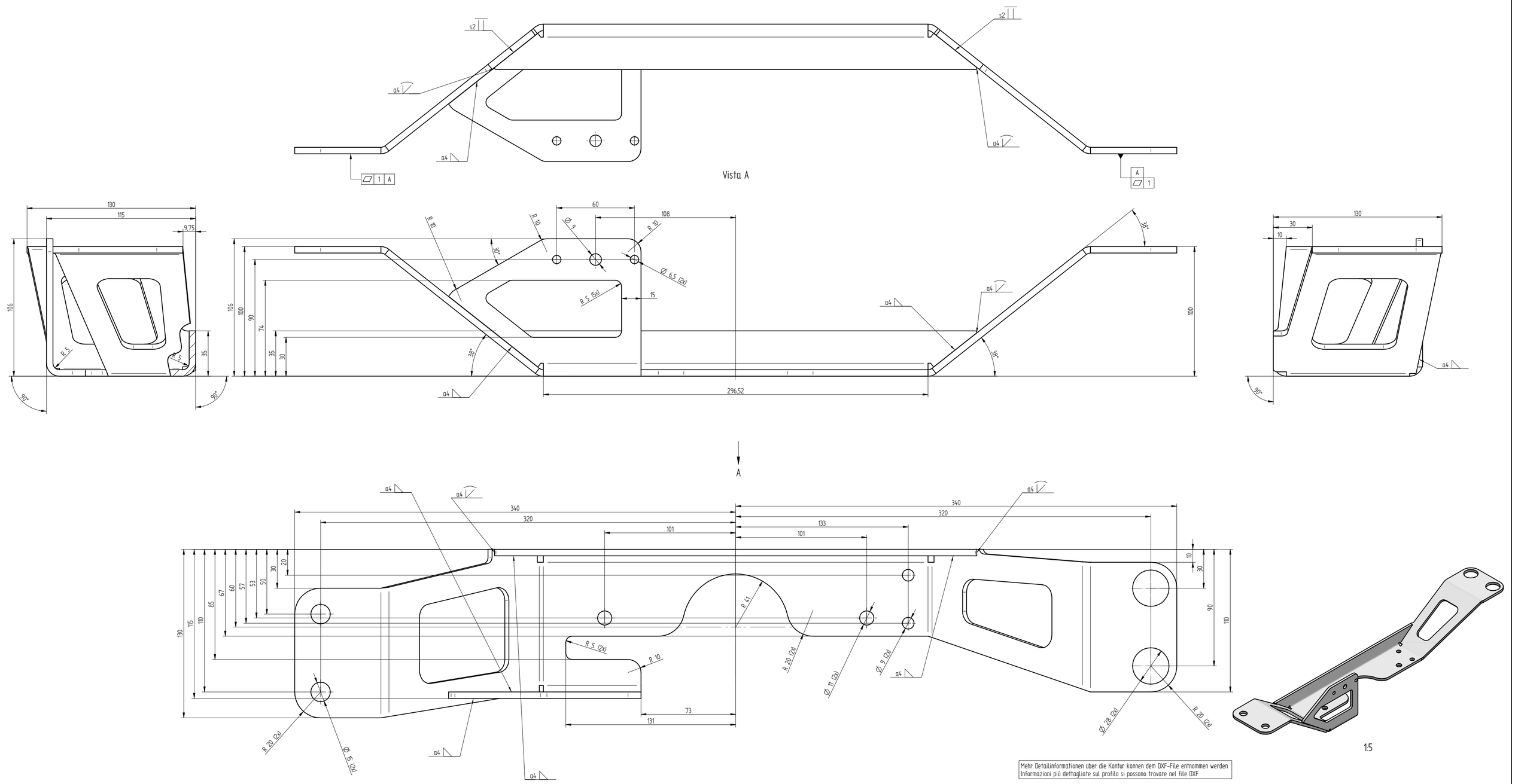

1:5

Mehr Detailinformationen über die Kontur können dem DXF-File entnommen werden
Informazioni più dettagliate sul profilo si possono trovare nel file DXF

Tulle le misure / tolleranze valgono dopo il trattamento superficiale!
Alle Maße / Toleranzen gelten nach der Oberflächenbehandlung!

Blech / lamiera s=5,00 mm
Biegeradius / raggio di piega R=5,00 mm

Ra3,2 superfice taglio laser / Laserschnittfläche

DIN 6784 -0,1 -0,2

General tolerances for manufacturing processes	Mechanical production turning, milling and bending	ISO 2768-mk	Thermal cutting	ISO 9013	Welding construction	ISO 13920	Metal moulded parts ISO 8062
Plastic moulded parts	ISO 20457						
Geometrix product specification According to GPS rules	Fundamentals, concepts principles and rules	ISO 8015	Tolerances of form, orientation, location and run-out	ISO 1101	Welding joint	ISO 2553	Work piece esge ISO 13715
Surface condition	ISO 1302						

Revision	Version	Description of the change	Date	Creator	Approver

Scale	1 : 2	Material	S235JR	Surface treatment	electroplating EN ISO 2081 Fe/Zn12A
Weight	2.63 kg				
Page size	A2	Status of drawing	Released	Item number	SBUP0621
Revision	00	Version	A	Page	1/1
Dimensioning unit	mm	Creator	Sonnert J.	Approver	PhilippM
IDDOK "ZHY"	468007				
Projection method		Create date	01.08.2022	Approve date	19.10.2022
Description	Turning part holder 2022				

ISO 16016

The reproduction, distribution and utilization of this document as well as the communication of its contents to others without express authorization is prohibited. Offenders will be held liable for the payment of damages. All rights reserved in the event of the grant of a patent, utility model or design.