GENERAL TOLERANCES
Angular dimension +-1° - Roundness range of tolerance from IT4 to IT11. Must be contained within half of dimensional tolerance.
MACHINED holes H14 shafts h14 linear values Js14 -- ROUGH holes H16 shafts h16 linear values Js16
SHEETS cutting/laser cutting/punching Js13 holes H13 bending/pressing Js14 -- ALUMINIUM DIE CASTING Norm 4011_1005_00
PLASTIC MATERIALS according to DIN 16901 -- CAST IRON Norm 4011_1003_00
The general tolerances for ROUGH of plastic (DIN 16901) of aluminium (4011_1005_00), of CAST IRON (4011_1003_00), must be intended H for holes, h for shafts, Js for all the other dimensions

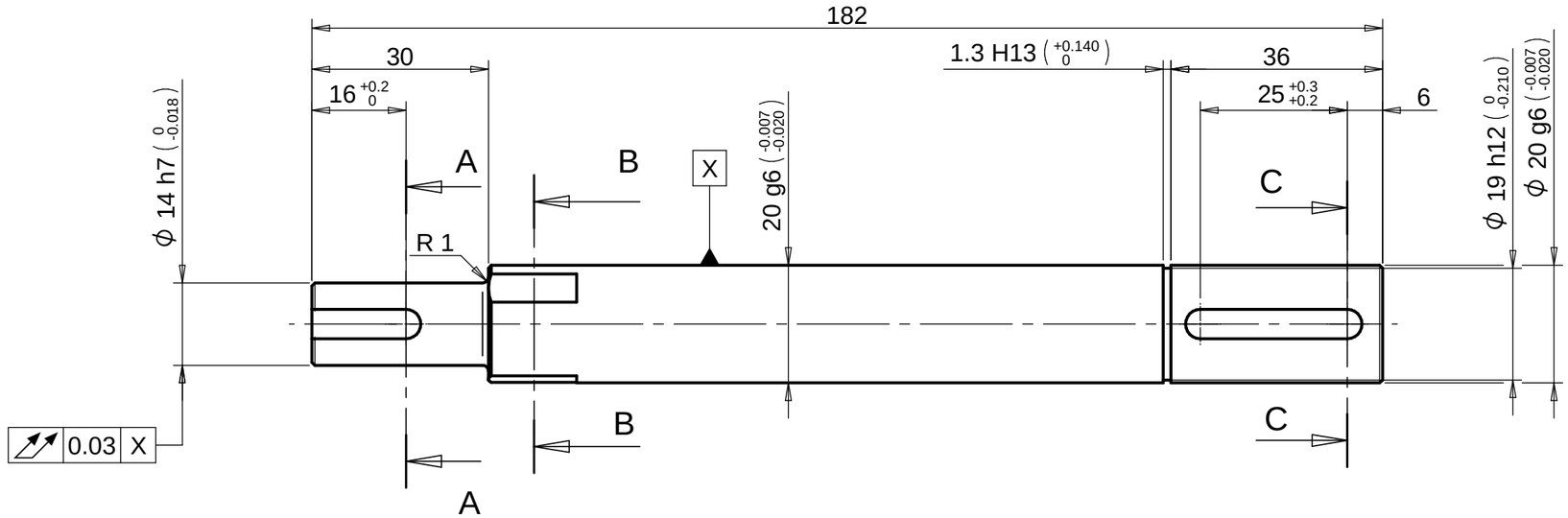

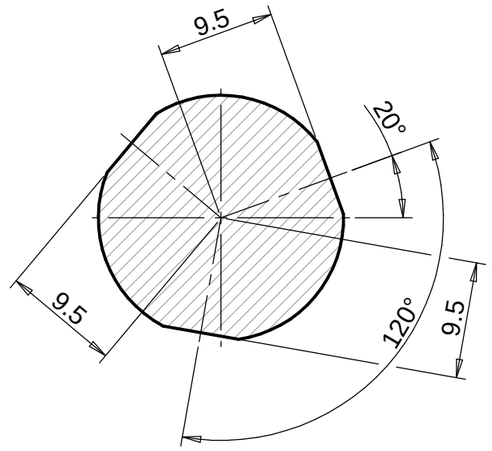

SECT./Sez. B-B
SCALE/Scala: 2:1

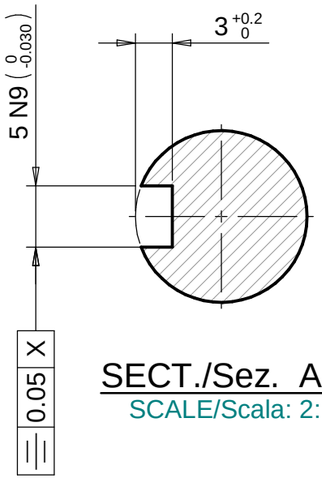

SECT./Sez. A-A
SCALE/Scala: 2:1

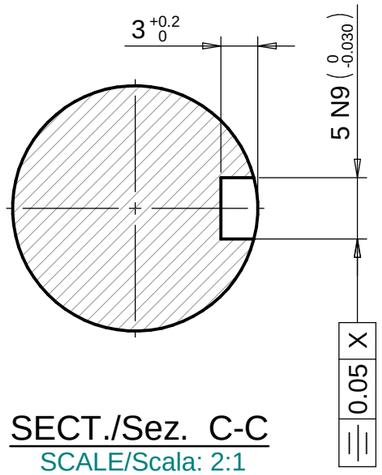

SECT./Sez. C-C
SCALE/Scala: 2:1

1.6

- FREE OF BURRS AND EDGES/Esente da bave e spigoli vivi
- UNDIMENSIONED CHAMFER /Smussi non quotati: 0.5x45°

CN06601		21/03/2023	00
Change	Modification details ☐:	Date Mod:	IRP
Changes to previous release △:		Obtain from:	Substitute:
Material:	34CrNiMo6+QT+C UNI EN 10277-5	Code:	4032_2110_99
Supply state:	+QT+'C': QUENCHED TEMPERED + COLD DRAWN	Dimensions:	
Thermic treat.:		Hardness(T):	
Surface treat.:	Mnph r 10 UNI ISO 9717	Hardness(S):	
Weigth:	.4 kg	Volume:	0 m^3

DENOMINATION: ALBERO RIDUTTORE ASSE STIRO 2 LYBRA

Draw.:	Date:	07/02/2023	055673.0.0
	Sheet N°:	1/1	
App. :	Scale:	1:1	AXIS