	GENERAL TOLERANCES
	Angular dimension +-1° - Roundness range of tolerance from IT4 to IT11. Must be contained within half of dimensional tolerance.
	MACHINED holes H14 shafts h14 linear values Js14 -- ROUGH holes H16 shafts h16 linear values Js16
	SHEETS cutting/laser cutting/punching Js13 holes H13 bending/pressing Js14 -- ALUMINIUM DIE CASTING Savio Norm 4011_1005_00
	PLASTIC MATERIALS according to DIN 16901 -- CAST IRON Savio Norm 4011_1003_00
12	The general tolerances for ROUGH of plastic (DIN 16901) of aluminium (4011_1005_00), of CAST IRON (4011_1003_00), must be intended H for holes, h for shafts, Js for all the other dimensions

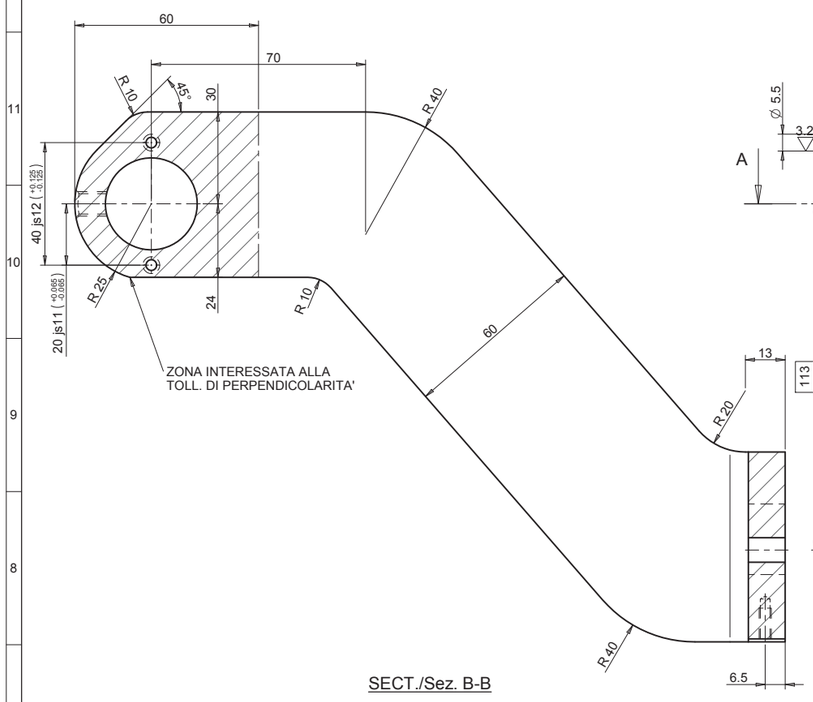

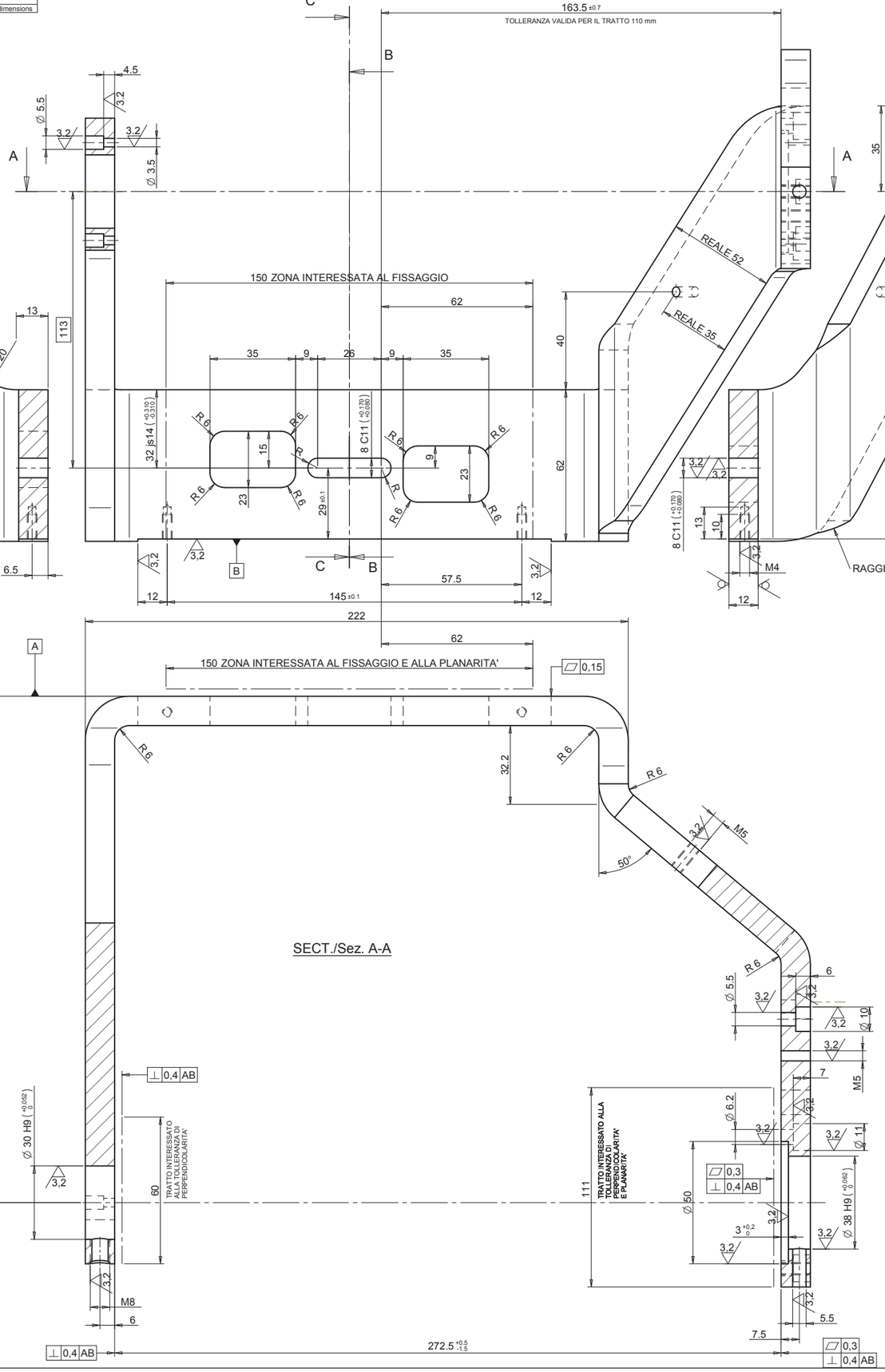

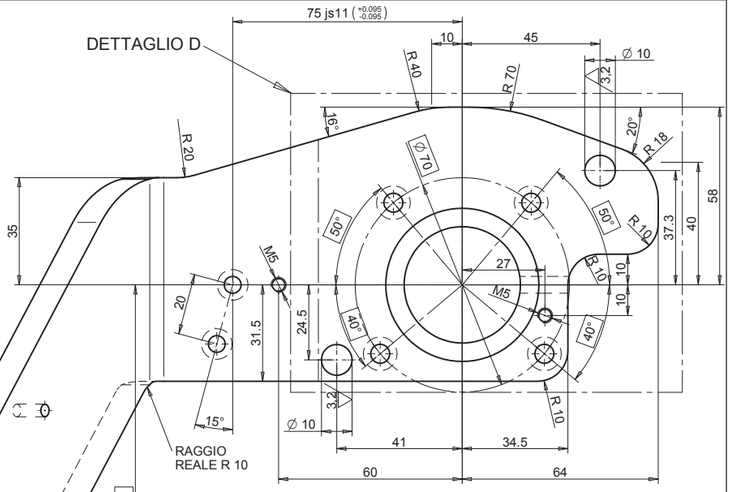

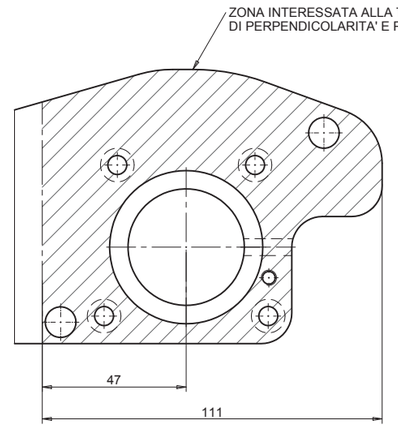

APPROVED
UNICKA
FUTURE TECHNOLOGY
02/03/2016

BAVA MAX 0,15
QUOTE MANCANTI FARE RIFERIMENTO AL MODELLO 3D

CN00880	Modificato dimensione asola da 24 a 26mm		1
Change	Modification details:		IRP
Changes to previous release:		Substitute:	16140_5514_0_0
Material:	DD13 UNI EN 10111	Code:	001615.0.0
Supply state:	+N: NORMALIZING ROLLING	Dimensions:	
Thermic treat.:		Hardness(T):	
Surface treat.:	Cataphoresis epoxy graphite black RAL9011 4010-0003-00	Hardness(S):	

Approved

DENOMINATION: BRACCIO PORTAROCCHE ECOPOLAR

Savio	Draw.: Dante Zancai	Date: 15/06/2015	004250.0.0	
	App.: Stefano Malfante	Sheet N°: 1/1		
		Scale: 1:1	BRACKET	

Reserved property of SAVIO MACCHINE TESSILI S.p.A. In accordance with the law, the contents of this drawing may not be re-produced or communicated to third parties.