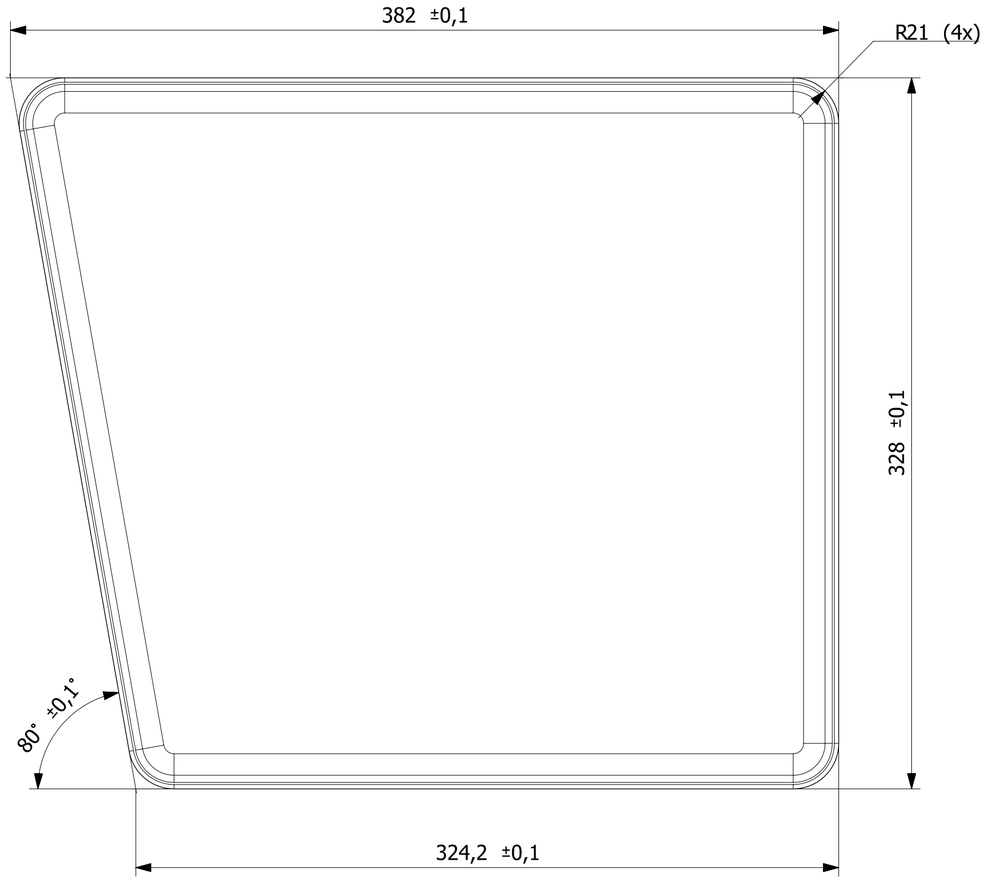

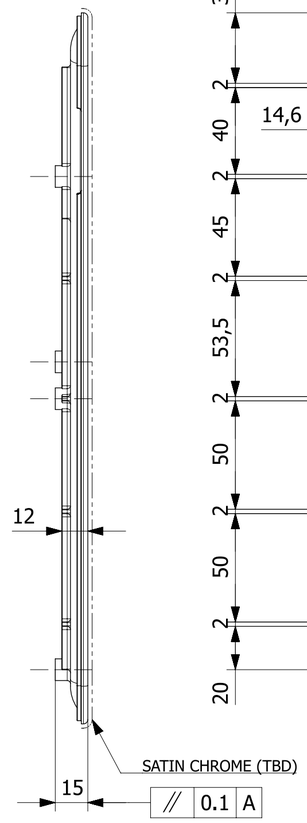

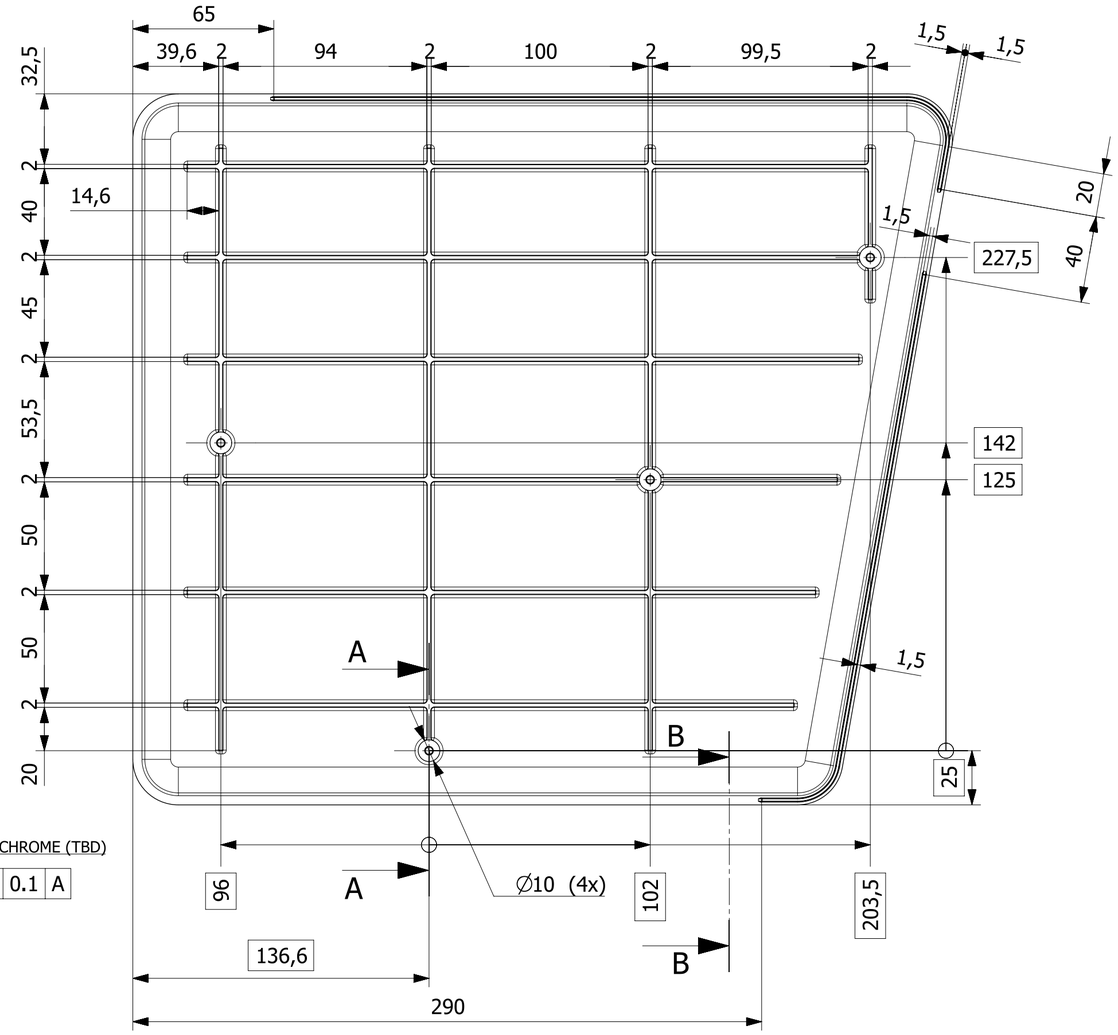

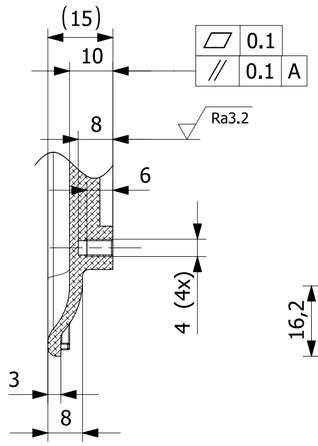

SECTION A-A
SCALE 1:1

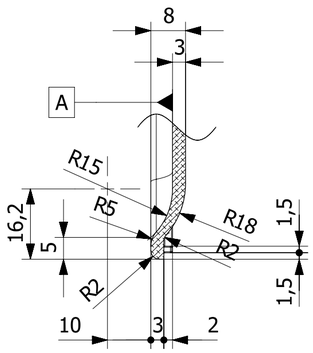

SECTION B-B
SCALE 1:1

NOTES
ALL RADII NOT SPECIFIED TO BE R0.25mm MAXX
ALL SHARP EDGES AND CORNERS NOT SPECIFIED TO BE R0.25mm
ALL DRAFT ANGLES NOT SPECIFIED TO BE 1° PER SIDE
PARTS SHOULD BE CLEAN AND FREE FROM MOLD RELEASE AGENTS, OILS, GREASES AND ANY OTHER FOREIGN CONTAMINANTS
MAXIMUM ALLOWABLE BURR HEIGHT SHALL NOT EXCEED 10% OF THE MATERIAL THICKNESS
PARTS SHOULD BE CLEAN END FREE FROM MOLD RELEASE AGENTS, OILS, GREASES AND ANY OTHER FOREIGN CONTAMINANTS
PART SHOULD BE ADEQUATELY PACKED TO PREVENT DAMAGE IN TRANSIT, HANDLING AND STORAGE
ALL DIMENSIONED HOLES ⌖ ∅0.2
FOR ANY MISSING DIMENSIONS SEE REFERENCE 3D MODEL
ALL EXTERNAL SURFACES ARE AESTHETIC
AESTHETIC SURFACES FINISH: TO BE DECIDED
IN THE CASE OF COLOURED PARTS:
THE COLOUR SHOULD BE HOMOGENEOUS AND WITHOUT FLOW LINES/MARKS.

Ra3.2

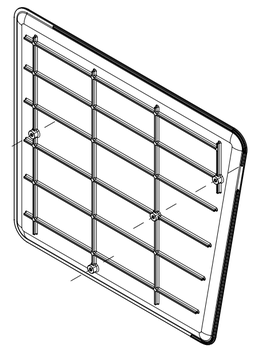

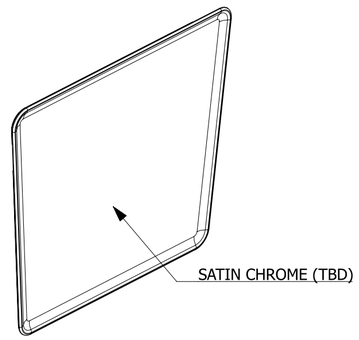

LIMITS FOR NOMINAL DIMENSION RANGES (mm)									GENERAL TOLERANCES UNI-ISO 2768/1 ex 5307 CLASS M
LINEAR	> 0.5 < 6	> 6 < 30	> 30 < 120	> 120 < 400	EXT RADII,	> 0.5 < 3	> 3 < 6	> 6	THREADS: METRIC ISO/R 262; STRAIGHT PIPE UNI ISO 228; TAPER PIPE DIN 2999
DIMENS.	± 0.1	± 0.2	± 0.3	± 0.5	CHAMFER H.	± 0.2	± 0.5	± 1	

MATERIALE / *MATERIAL* ALUMINUM EN AB 46100			PESO / *WEIGHT (g)* 1000	TOLL. GEN. / *GEN. TOLL.* UNI EN-ISO 22768-mK	
TRATT. TERMICI / *HEAT-TREAT.*		TRATT. SUPERFICIALE / *SURFACE-TREAT.*	RACC. NON QUOT. *FILLETS NOT DIM.* R1.5	SMUSSI NON QUOT. *CHAMF. NOT DIM.*	
DISEGN. / *DESIGNED* CPI-ENG DES.	VERIF. / *CHECKED*	APPROV. / *APPROV.*	RILASCIATO PER PROD. / *RELEASE FOR PROD.* RONCALI EUGENIO	SOSTITUISCE IL / *REPLACES:*	
DATA / *DATE* 25/06/2021	DATA / *DATE*	DATA / *DATE*	DATA / *DATE*	SOSTITUITO DA / *REPLACED BY:*	
CODICE ARTICOLO / *ITEM CODE* (CPI-ENG) PRD2100347			REV. -	FORMATO / *SIZE* A2	SCALA / *SCALE* 1:1 / FOGLIO / *SHEET* 1 / 1
CODICE ARTICOLO / *ITEM CODE* (ILLY)			REV.		
DENOMINAZIONE / *TITLE PART-ASSEMBLY* ESTETICA COPERTURA SINISTRA					

Confidenziale © illycaffè s.p.a. 2021 - Materiale riservato ad esclusivo uso interno, di proprietà della illycaffè s.p.a. Vietata la riproduzione e/o divulgazione anche solo parziale.
Confidential © illycaffè s.p.a. 2021 "This documente is confidential and property of illycaffè s.p.a. Any full or partial distribution, reproduction and/or duplication is strictly prohibited."

REV.	DESCRIZIONE / *REVISIONS DESCRIPTION*	MODIFICATO	DATA MOD.	VERIFICATO	DATA VERIF.	APPROVATO	DATA APPR.