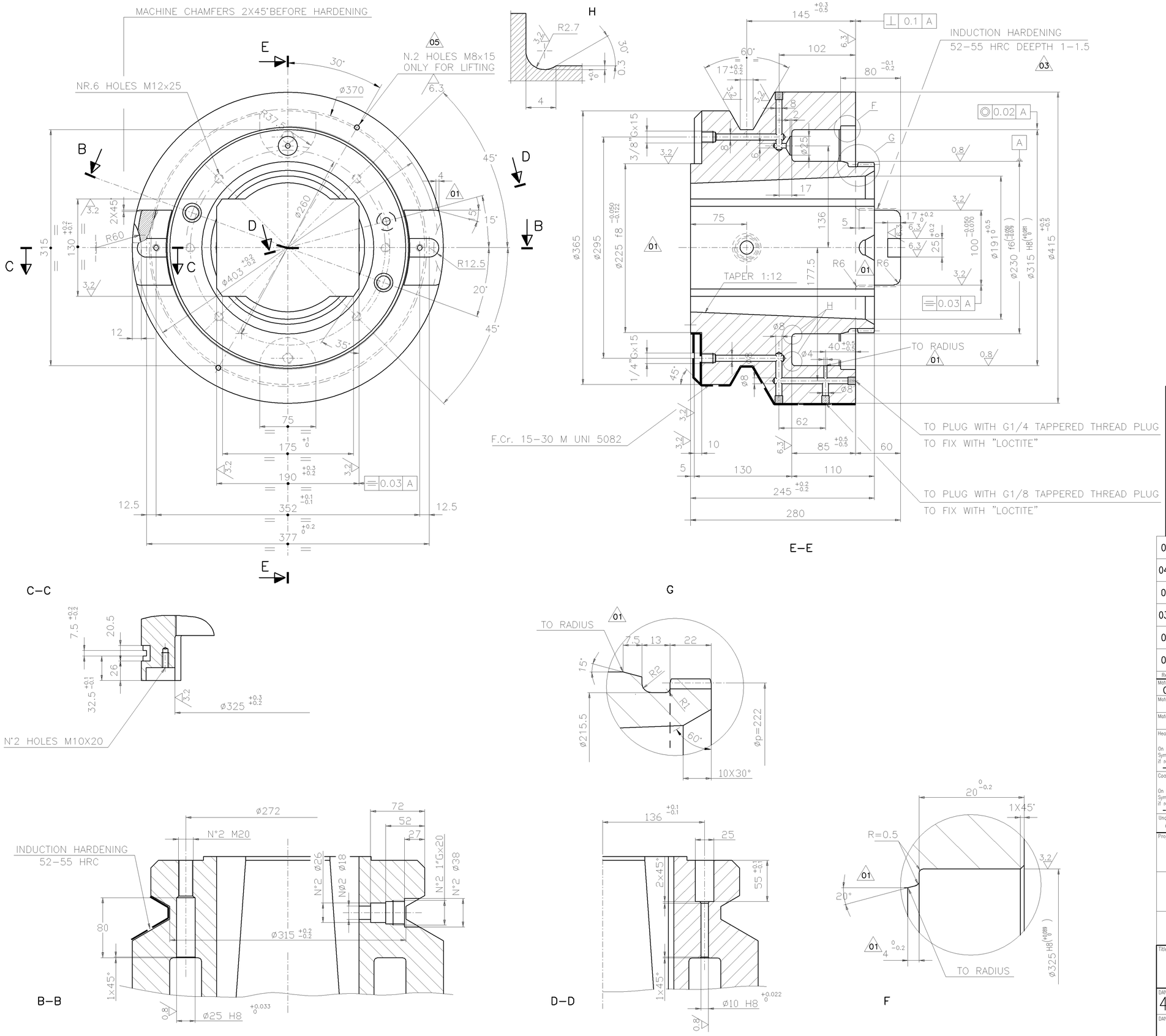

ARROTONDARE GLI SPIGOLI INTERESSATI AL TRATTAMENTO DI TEMPRA
ALL HARDENED EDGES MUST TO BE RADIATED

DENTATURA CILINDRICA DIRITTA RIBASSATA PER ALBERO
SHAFT STUB STRAIGHT SPUR GEARS

m	MODULO NORMALE	3	NORMAL MODULE
Z	NUMERO DI DENTI	74	NUMBER OF TEETH
α	ANGOLO DI PRESSIONE NORMALE	20	NORMAL PRESS. ANGLE
d	DIAMETRO PRIMITIVO DI RIFERIMENTO	222	REFERENCE PITCH DIAMETER
da	DIAMETRO DI TESTA	226.8	TIP DIAMETER
dB1	DIAMETRO DI BASE	216	BASE DIAMETER
A	ADDENDUM	2.4	ADDENDUM
B	DEDENDUM	3	DEDENDUM
d	GIOCO SUI FIANCHI	0.3–0.5	SIDE CLEARANCE
Wn	MISURA WILDHABER	78.389	WILDHABER MEASURE
NR	SU NUMERO DENTI	–	ON NUMBER OF TEETH
NR	INGRANA CON PARTICOLARE NR	4.363838.C	MESHES WITH DETAIL NR.
a'	INTERASSE DI FUNZIONAMENTO	0	OPERATING CENTER DISTANCE

Rev.	Date	Revisions description	Drawn by	Checked by	Approved by
05	15 May 2019	ADDED LIFTING HOLES	Coseano L	Martinel P	
04A	17 Sep 2011	UPDATED SURFACE SYMBOLS AND GRAPHIC REVISION	Tosolini M	Vinetti D	
04	7 Feb 2008	AGGIORNATO GIOCO SUI FIANCHI + NORMA LAMINATI UPDATED SIDE CLEARANCE + ROLLED STANDARD	Carletti	Zampa	
03A	12 Oct 2006	AGGIORNATO NORME FUCINATI UPDATED FORGED SPEC.	Zampa	Carletti	
03	1 Oct 1998	AGGIORNATO DOVE INDICATO UPDATED WHERE INDICATED	Vergendo	Canzutti	
00	1 Feb 1996	EMISSIONE ISSUED	Sgubin	Cattelan	

Material 1 (where not indicated on drawing): C40E EN 10083-2 — State of supply Mat.1: 2.8.032 — Supply Class: B — Pattern DB
Material 2 — State of supply Mat.2 — Danieli Supply Std. — Supply Class — Casting Code
Material 1 Equivalent

Heat Treatment — On Drawing Symbol, if required, ——
BONIFICA+TEMPRA IND.&RINV.
DUREZZA A CUORE 210-250 HB
DUREZZA SUPERFICIALE 52-55 HRC
SPESSORE EFFICACE MIN 01.50 MM
QUENCH.&TEMP.+IND.HARD.&TEMP.
CORE HARDNESS 210-250 HB
SURFACE HARDNESS 52-55 HRC
EFFECTIVE DEPTH MIN 01.50 MM

Coating — On Drawing Symbol, if required, ——
CROMATURA
CHROMIUM PLATING
F.Cr – UNI ISO 6158 015-030 micron Tipo M
F.Cr – UNI ISO 6158 015-030 micron Type M

Unquoted radius	Unquoted bevels	Dimensions without tolerance as per	Machinings	Prec.Class	Max. Welding Class
0.8 (mm)	1X45° (mm)	DANIELI STD 2.4.103	12.5 / 6.3 / 3.2 / 0.8	C	

Project Name

DANIELI MORGÅRDSHAMMAR

Job nr — Obtained from: 4.363829.B — Replaces

Family code/Machine code: 40742
Weight (Kg): 130 — J (Kgm²)

Title: CAPPELLO
CROSSHEAD ESS 510

Scale: 1:2.5
Format: A1
Nr. of sheets: 001
Sheet: 001 — Follow

DANIELI Shop number: 4.491998.N — Revision: 05
DANIELI dwg number — Revision

According to law DANIELI & C. SpA considers this document to be a company secret and therefore prohibits any person to reproduce or disclose it or make it known in whole or in part to other parties or to competitors without specific written authorization of DANIELI's Management

File nr "4491998N_001

COMPUTER AIDED DESIGN –A