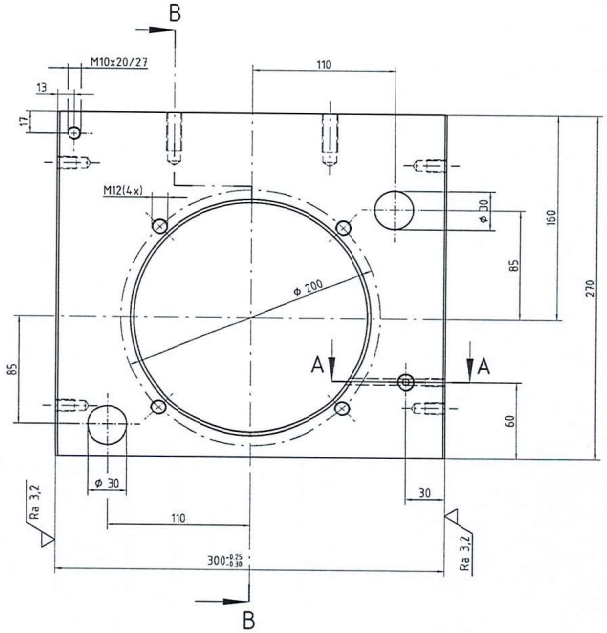

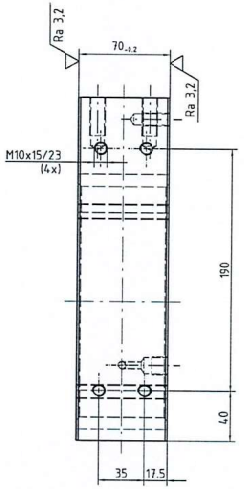

Y

B-B

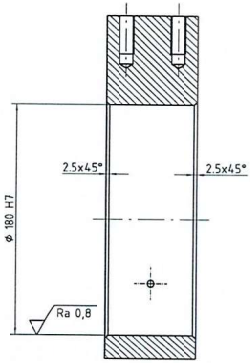

VIEW-Y

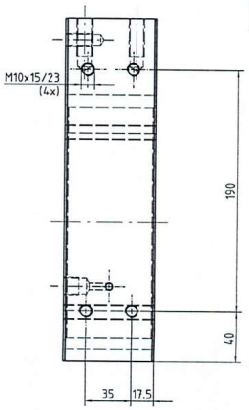

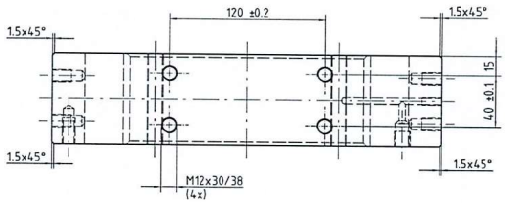

A-A

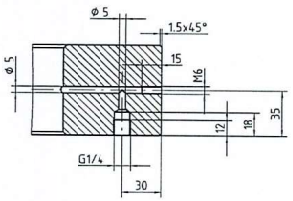

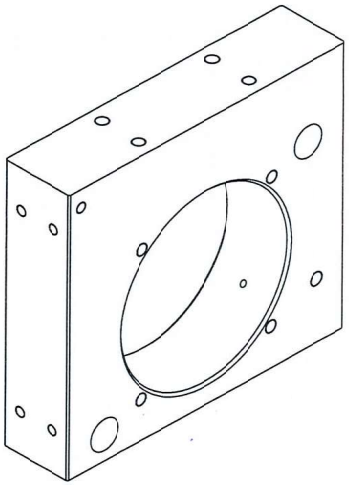

verzinkt 2-3 µm and passiviert
Toleranzen müssen nach dem galvanisieren eingehalten werden.

galvanized 2-3 µm and passivated
tolerance range must be kept after galvanizing

Ra 25 (Ra 3,2 Ra 0,8)

RR. 90 p2. Rif. 12261

Benennung / Designation: Lagerbockeinheit / Bearing pedestal unit					SMS group
Verantw. / Responsible: SISL	Referenz / Reference: 15297091	Erstellt / Created: 25.10.2021	Fertigungsvorschriften / Manufacturing instructions: SN 200		Dokumenttyp / Document Type: Einzelteilzeichnung / Component drawing
Gewicht / Weight [kg]: 29,300	Werkstoff / Material: S355JR+N				Projektionsmethode 1 / ISO 128 First angle projection method
Ersteller / Author: PAVI05	Maßstab / Scale: 1:2	Dokument-Nr. / Document-No.: 1011103158	Index: -	Blatt / Sheet: 1/1	Format: 1
					Materialnummer / Material number: 15336226

The present document is protected by copyright. Reproduction, distribution and utilization of this document as well as communication of its contents to others are prohibited unless expressly authorized by us. Any violations will be prosecuted under criminal law and will result in an obligation to pay damages. All rights reserved