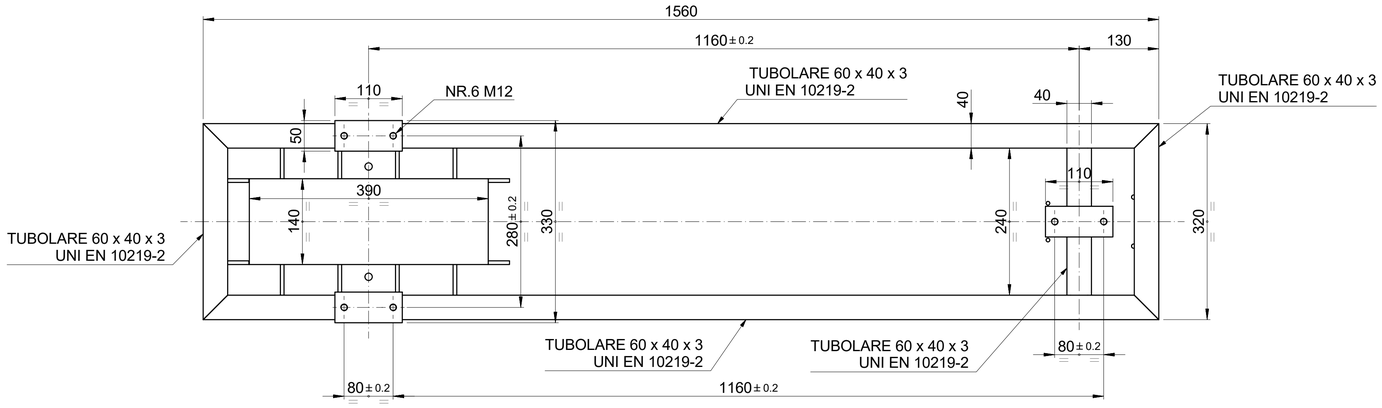

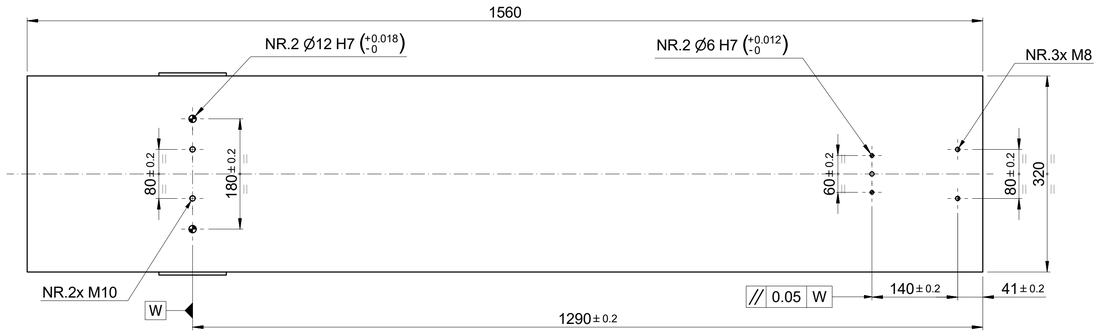

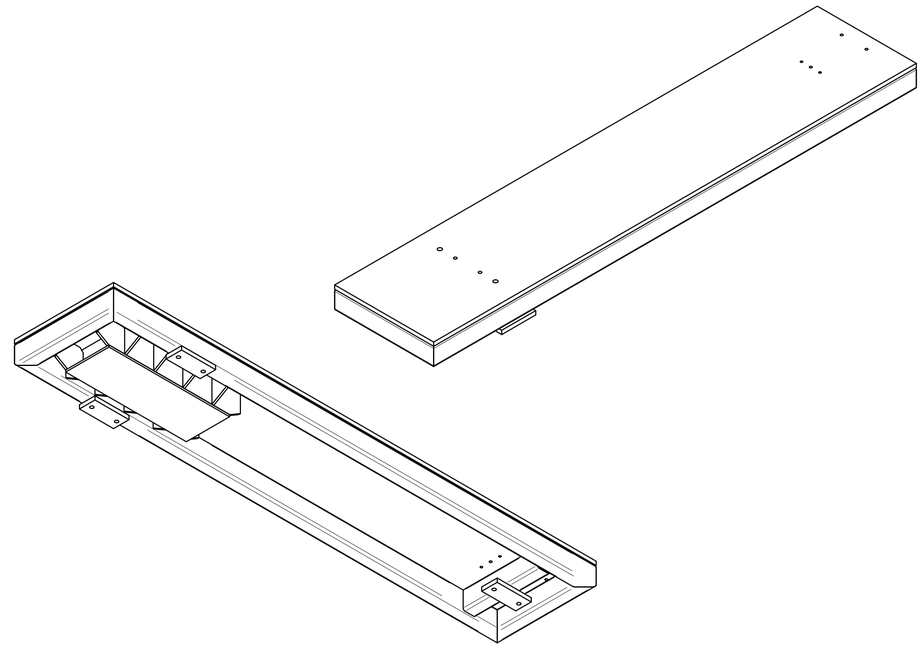

B-B (1 : 2.5)

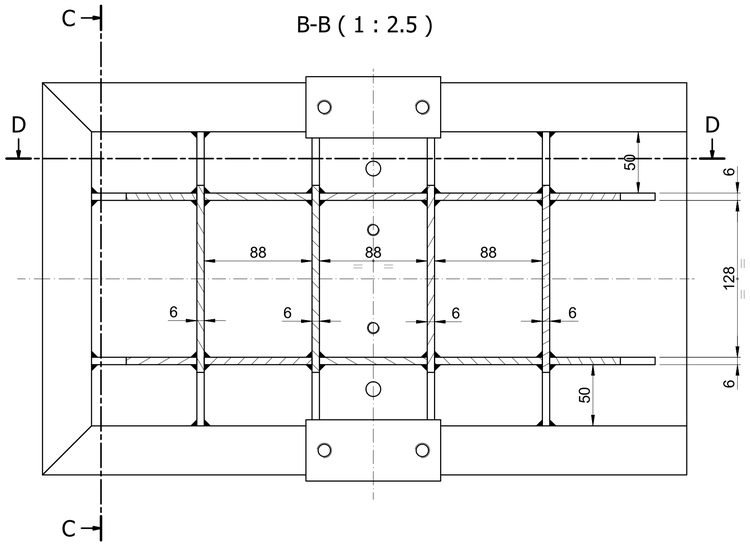

C-C (1 : 2.5)

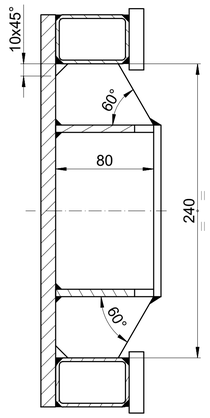

D-D (1 : 2.5)

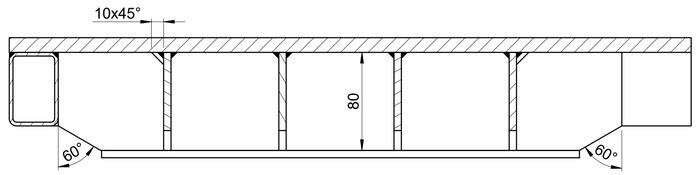

EFFETTUARE TRATTAMENTO DI DISTENSIONE
TRA LA SALDATURA E LE LAVORAZIONI DI MACCHINA.
VALUTARE SE PREVEDERE SOVRAMETALLO SULLE SUPERFICI
CHE VERRANNO SUCCESSIVAMENTE LAVORATE
(PIANO "Y", SUPERFICI "Z").

DOVE NON PRECISATO WHEN NOT INDICATED	
SEDI PER VITI SPOT FACING	6.3
SEDI PER SPINE PIN HOLES	1.6
FILETTATURE SCREW THREAD	3.2

TRATTAMENTO SUPERFICIALE
SURFACE TREATMENT

FOSFATAZIONE
PROFONDITÀ 8–12μm
PHOSPHATATION
DEPTH 8–12μm

6.3 / 3.2 / 1.6 / SMUSSO SPIGOLI NON QUOTATI= UNQUOTED BEVELS...
RAGGI NON QUOTATI: R = UNQUOTED RADIUS...

SCOSTAMENTI PER QUOTE SENZA INDICAZIONE DI TOLLERANZA COME IN : FOR DIMENSIONS WITHOUT TOLERANCE INDICATION , DEVIATIONS SHALL BE IN ACCORDANCE WITH : UNI ISO 2768/1

CLASSE DI TOLLERANZA / TOLERANCE CLASS : PRECISO / PRECISE

SALDATURE
Weldings

DOVE NON INDICATO A = 0.7 DELLO SPESSORE MINIMO DA COLLEGARE

WHERE NOT INDICATED A = 0.7 OF MINIMUM THICKNESS TO BE WELDED

Preparazione dei lembi secondo ISO 2553
Edge preparation for welding to ISO 2553

SCOSTAMENTI PER QUOTE SENZA INDICAZIONE DI TOLLERANZA
DEVIATIONS FOR DIMENSIONS WITHOUT TOLERANCE

CLASSE DI TOLLERANZA/TOLERANCE CLASS
MEDIO/MEDIUM UNI EN 22768 – M

OLTRE OVER	0,5	3	6	30	120	400	1000	2000
FINO A UP TO	3	6	30	120	400	1000	2000	4000
SCOST. DEVIAT.	±0,1		±0,2	±0,3	±0,5	±0,8	±1,2	±2

Rev.	Date(dd-mm-yyyy)	Revisions description	Drawn	Checked	Approved
00	20-04-2021	EMISSIONE ISSUE	BaselloE	PivettaA	Saccomani

DANIELI AUTOMATION

Danieli item (TPC)
Contractual item
Obtained from
Replaces
Shop drw number | Rev.

Lab No. | No. of parts | Progr. No.

Pattern DB. | Pattern code | Unit M.A143.DS | Item 301

Material S275JR EN10025 | Heat treatment

Classification / symbol | Mass (Kg) 73,90 kg | J=m.r² (Kg m²)

Title
PIANO
PLANE

Scale 1:5
Format A1

DANIELI drw number M.A143.002 | Revision 00 | No. of sheets 1 | Sheet 001 / Follow –

According to law DANIELI AUTOMATION SpA considers this document to be a company secret and therefore prohibits any person to reproduce or disclose or make it known in whole or in part to other parties or to competitors without specific written authorization of DANIELI AUTOMATION SpA Management.

File number MA143002

CERTIFICATION OF THE QUALITY SYSTEM OF THE COMPANIES
CSQ
UNI EN 29001
ISO 9001
Member of
EQNet

Certified by OneDoc M.A143.002 Rev.00-EI 1/1