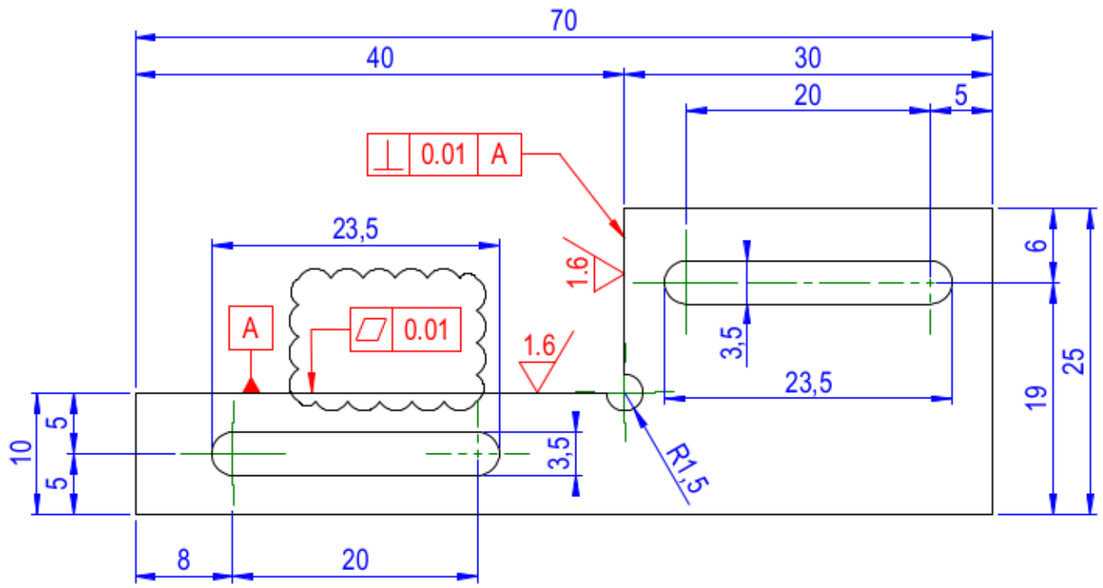

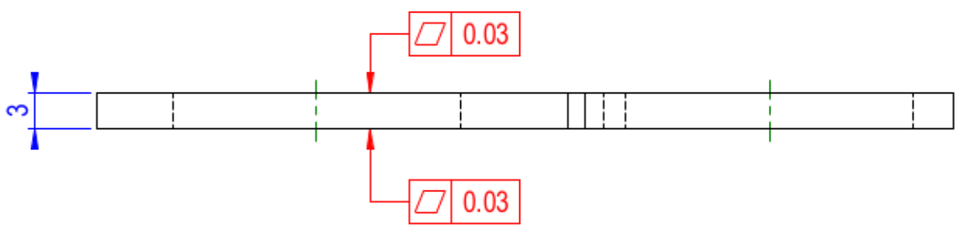

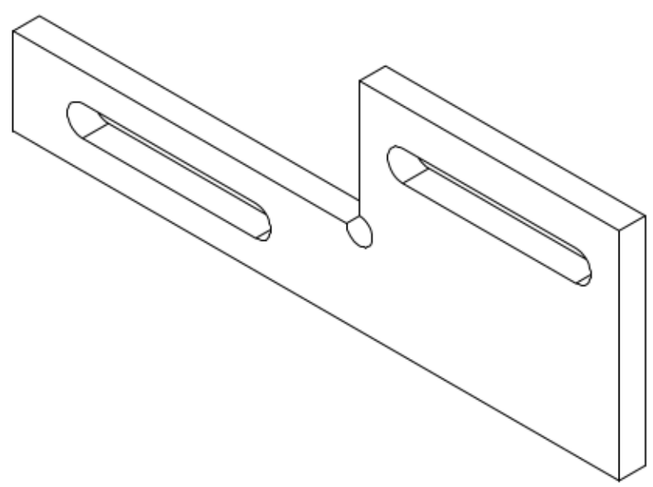

CJP ☐

1.6 [ ]

HOLES FOR SCREWES 6.3

UNQUOTED BEVELS = 0.5x45°

UNQUOTED RADIUS = 0.5

GENERAL MACHINING TOLERANCES – ISO 2768-1 Class mH

LINEAR DIMENSION									CHAMFER AND RADIUS					ANGULAR DIMENSIONS						
GRADE	OVER 0.5 TO 3	OVER 3 TO 6	OVER 6 TO 30	OVER 30 TO 120	OVER 120 TO 400	OVER 400 TO 1000	OVER 1000 TO 2000	OVER 2000 TO 4000	GRADE	DESCRIPTION	OVER 0.5 TO 3	OVER 3 TO 6	OVER 6	GRADE	DESCRIPTION	UP TO 10	OVER 10 TO 50	OVER 50 TO 120	OVER 120 TO 400	OVER 400
m	±0.1	±0.1	±0.2	±0.3	±0.5	±0.8	±1.2	±2	m	medium	±0.2	±0.5	±1	m	medium	±1°	±0°30'	±0°20'	±0°10'	±0°5'

THERMIC TREATMENT	SURFACE TREATMENT	MATERIAL	TOTAL WEIGHT (kg)
	PHOSPHATING UNI ISO 9717	S355J2+N	0.02

Object:

Descr.
PLATE

QUANTITY
16

Scale:
2:1

Job number	doc. type	doc. number	Rev.
		D8309A	1

ISO A3

This drawing is exclusive property of Cimolai S.p.A. and constitutes a confidential document. It is forbidden to exploit, divulge, disclose, use this drawing to the benefit of any third party and copy it in any manner whatsoever. All rights reserved.