Rev.	Date of issue	Description	Sign
00	01/09/2021	Emissione	L.G.

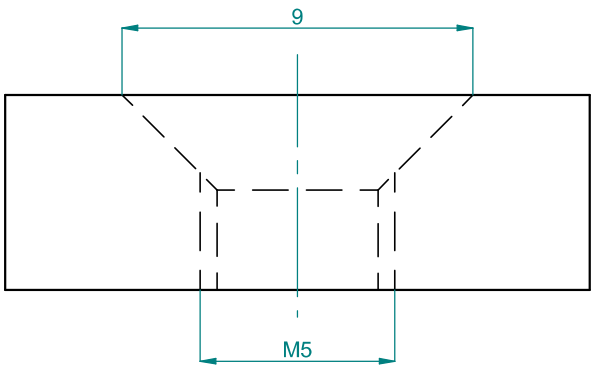

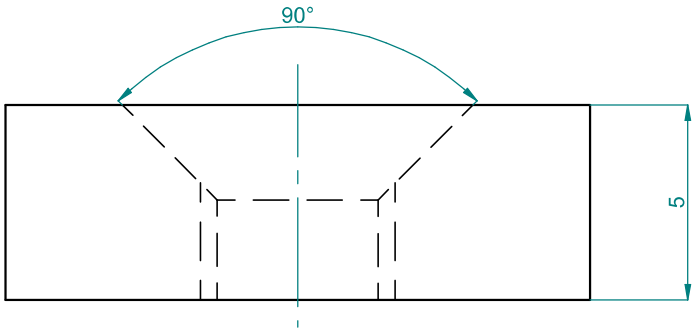

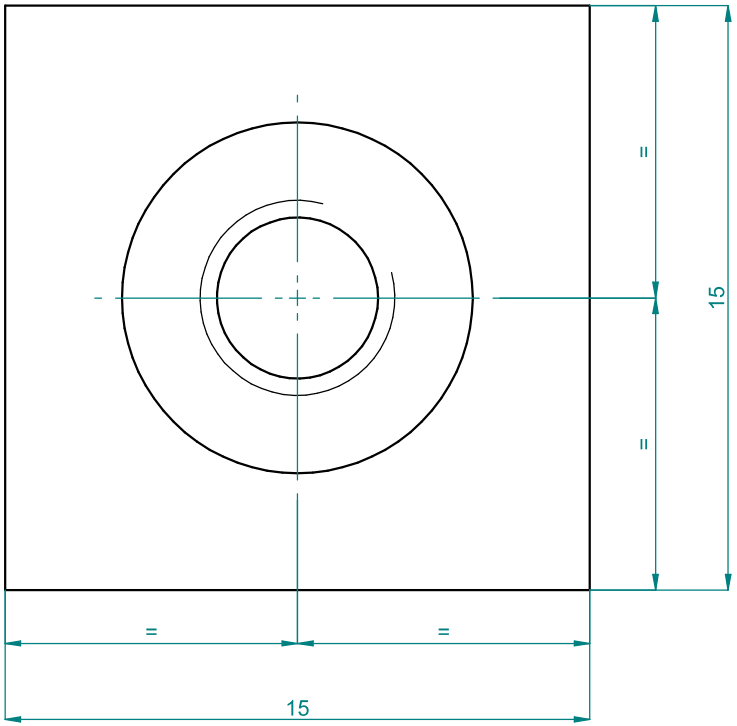

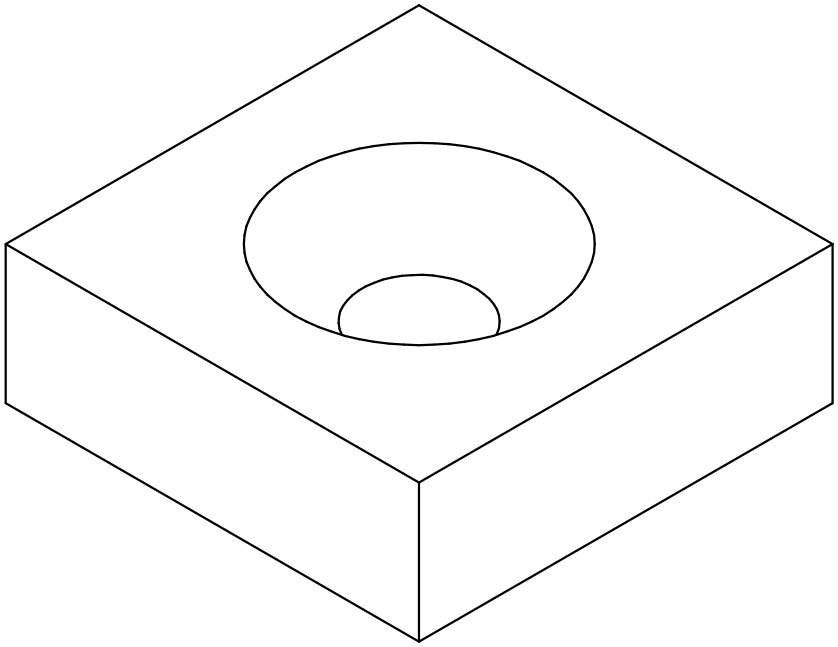

General tolerances For linear dimensions: ±0,1 mm For angular dimensions: ISO 2768-m	Weight 0,01 kg	Scale 5:1	
Created by L.G.	Material S 235JR	Finishing Zincato	
Title/Supplementary title Inserto quadro filettato Super Pro		Date of issue 01/09/2021	
Code name/File name AP-0510		Paper size A4	Sheet 1/1

IF IN DOUBT ASK