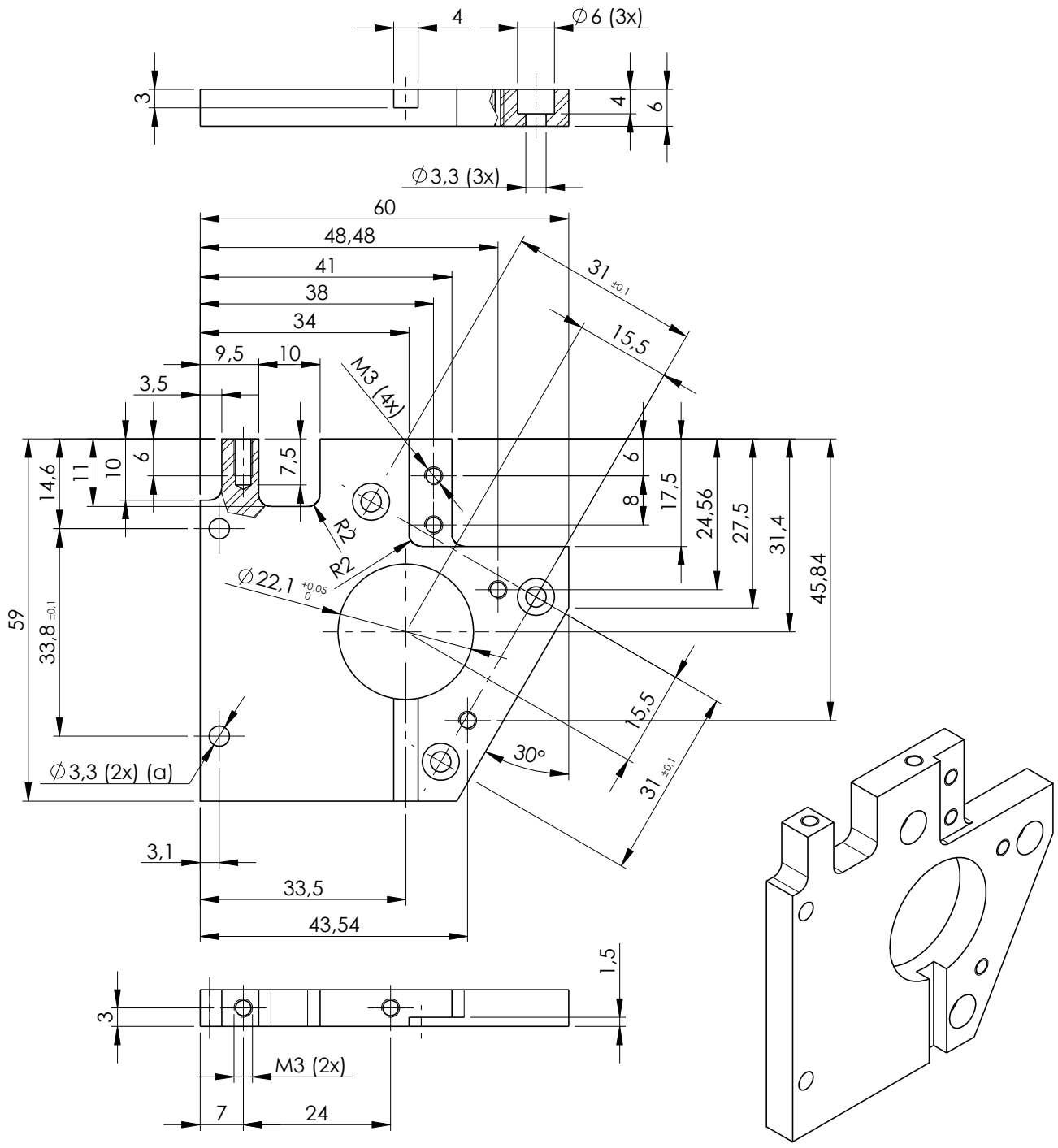


14000010 – ALODINE COLORE NEUTRO / COLOURLESS ALODINE

| MODIFICHE MODIFICATIONS | | | | | | |
|---|---|---|---|---|---|---|
| – | – | – | – | – | – | – |
| – | – | – | – | – | – | – |
| – | – | – | – | – | – | – |
| HOLE Ø3,3 ELIMINATED | a | – | 23.05.18 | SB | – | |

| TOLLER. TOLER. | VALORE VALUE | PESO GREZZO Kg BLANK WEIGHT Kg | RUGOSITA' ROUGHNESS Ra µm | E.MOD. REV. INDEX | N.COM. ORDER No. | DATA DATE | FIRMA SIGNATURE | APPR. APPROVAL |
|---|---|---|---|---|---|---|---|---|
| – | – | – | 3.2 ( ; ; ) | | | | | |

SMUSSI E/O RAGGI NON QUOT. 0.5x45° /0.2
NOT DIMENSIONED CHAMFER/RADIUS 0.5x45° /0.2

| | | | |
|---|---|---|---|
| SCALA SCALE | 1:1 | MATERIALE MATERIAL | ALUMINIUM 6060 – UNI 9006-1 |
| STATO FORN.MAT. BLANK STATE | 60x6 FLAT BAR | | |
| TOLL.GENERALI GENERAL TOLER. | UNI ISO 2768-mK | | |
| TRATT. SUPERF. SURFACE TREATM. | SEE DRAWING | | |
| TRATT. TERM. HEAT TREATM. | – | | |
| DUREZZA HARDNESS | – | | |

| | | | | | |
|---|---|---|---|---|---|
| SOSTITUISCE REPLACE | DATA DATE – | FIRMA SIGN. – | SOSTITUITO DA REPLACED BY | DATA DATE – | FIRMA SIGN. – |
| | – | | | – | |
| DATA DATE | 30.11.2017 | DISEGN. DRW. | S.B. | APPR. APPR. – | NORM. NORM. – |

DENOMINAZIONE DRW. NAME: Z-AXIS MOTOR PLATE

CODICE CODE: 1 0 1 B 2 3 9 0 REV.

FOGLIO SHEET 1 di of 1