Section view A-A

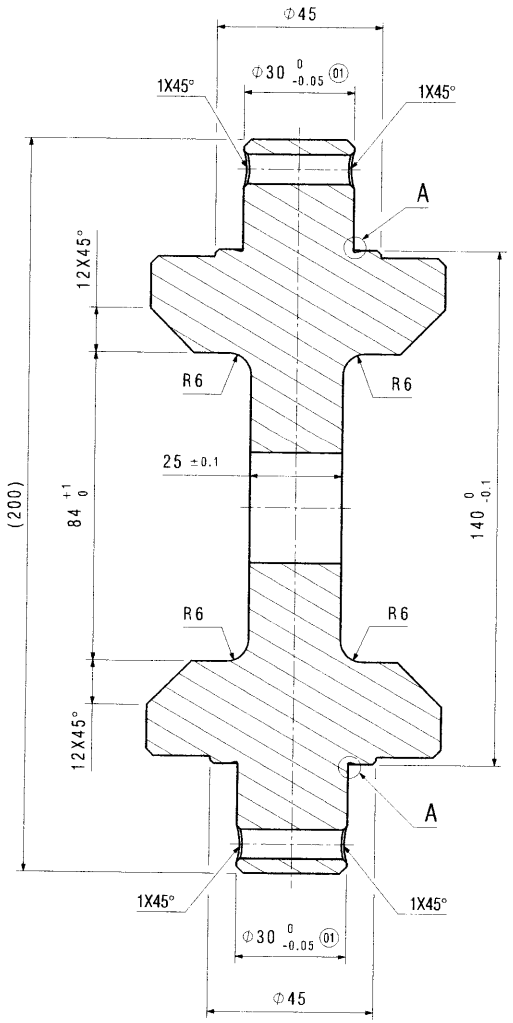

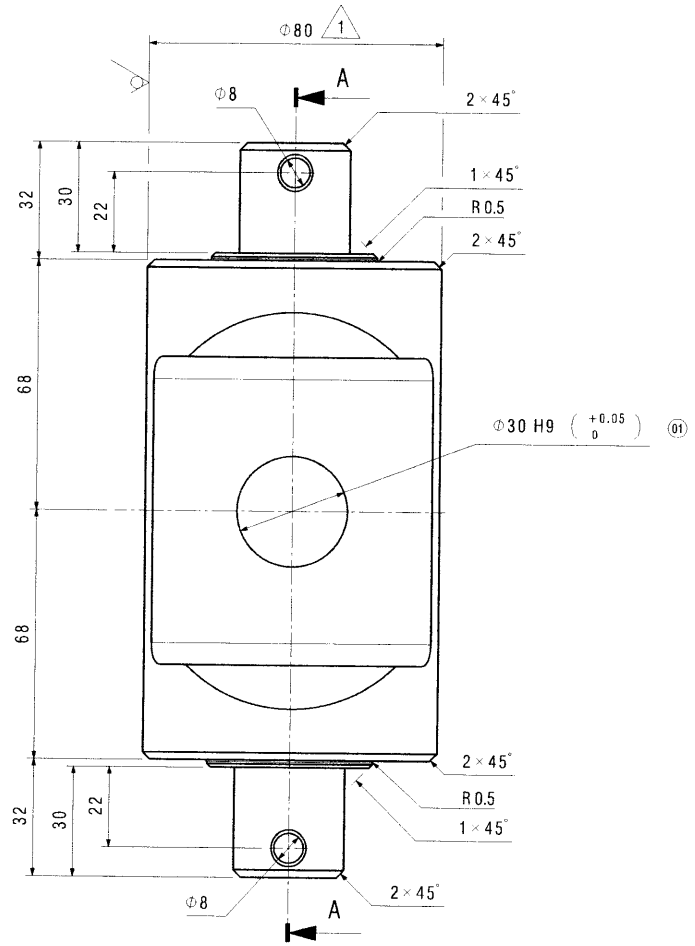

Detail A
Scale 10:1 (BOTH SIDE)

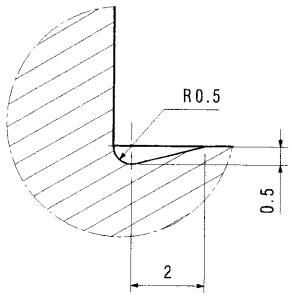

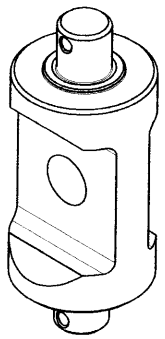

1 OBTAIN FROM DRAWN STEEL D.80 mm

Ra3.2 ( )

Rev	Mod.N°	Type	Modification object / Descrizione modifica	Drawn by	Approved by	Approv. Date
01	A19-097	C-1	UPDATED TOLLERANCES, UPDATED MATERIAL AND ADDED HEAT TREATMENT CAMBIATE TOLLERANZE, CAMBIATO MATERIALE E AGGIUNTO TRAT. TERMICO	mmoretto	mdelorenzi	15/07/2021

Treatment: Hardening and tempering 47-51 Hrc
Trattamento: Tempra-Rinvenimento 47-51 Hrc (01)
Surf.Finish: Zinc Coating Flake Ref. Cap TS-021
Finitura sup: Zincatura lamellare Rif. Cap TS-021 (01)
Material: (01)
42CrMo4 TEMP. UNI EN ISO 683-2:2018
Blank Descr: --
Descr.Grezzo: --

Creation Date: 05/07/2021
Weight [Kg]: 3.507
Perimeter [mm]: --
Circumferences included

Model: --
Group: --
Critical Lev: --
Part Nr: A51302941
Replace: --
Description: PIN FOR RAM LOCK D.30 H.140
Descrizione: PERNO FERMO MARTINETTO D.30 H.140
Blank: --
Wet Area[m2]: --
European method
Scale: 1:1

SUPPLY SPECIFICATIONS / SPECIFICHE DI FORNITURA
Remove all punching burrs after machining or press-forming process, draft angle 2°, fillets not quoted R=2, chamfers not quoted: 0.5x45°. For other specifications please contact the Technical Department.
Eliminare bave e spigoli da lavorazione o stampaggio, sformi generali 2°, raggi non quotati: R=2, smussi non quotati: 0,5x45°. Per ogni ulteriore specifica, contattare l'Ufficio Tecnico

⏥ 0.4	⊥ 0.2/100	
◯ 0.4	// 0.2/100	
◎ 0.25	⊥ 0.2/100	

Angles ± 1°
Angoli ± 1°

General tolerance - Tolleranza generale: UNI EN 22768/1 - M									
Length and Diam. / Lungh. e Diametri	0.00	6.00	30.0	120	315	1000	2000	4000	> 4000
Tolerance / Tolleranza	±0.1	±0.2	±0.3	±0.5	±0.8	±1.2	±2.0	±3.0	