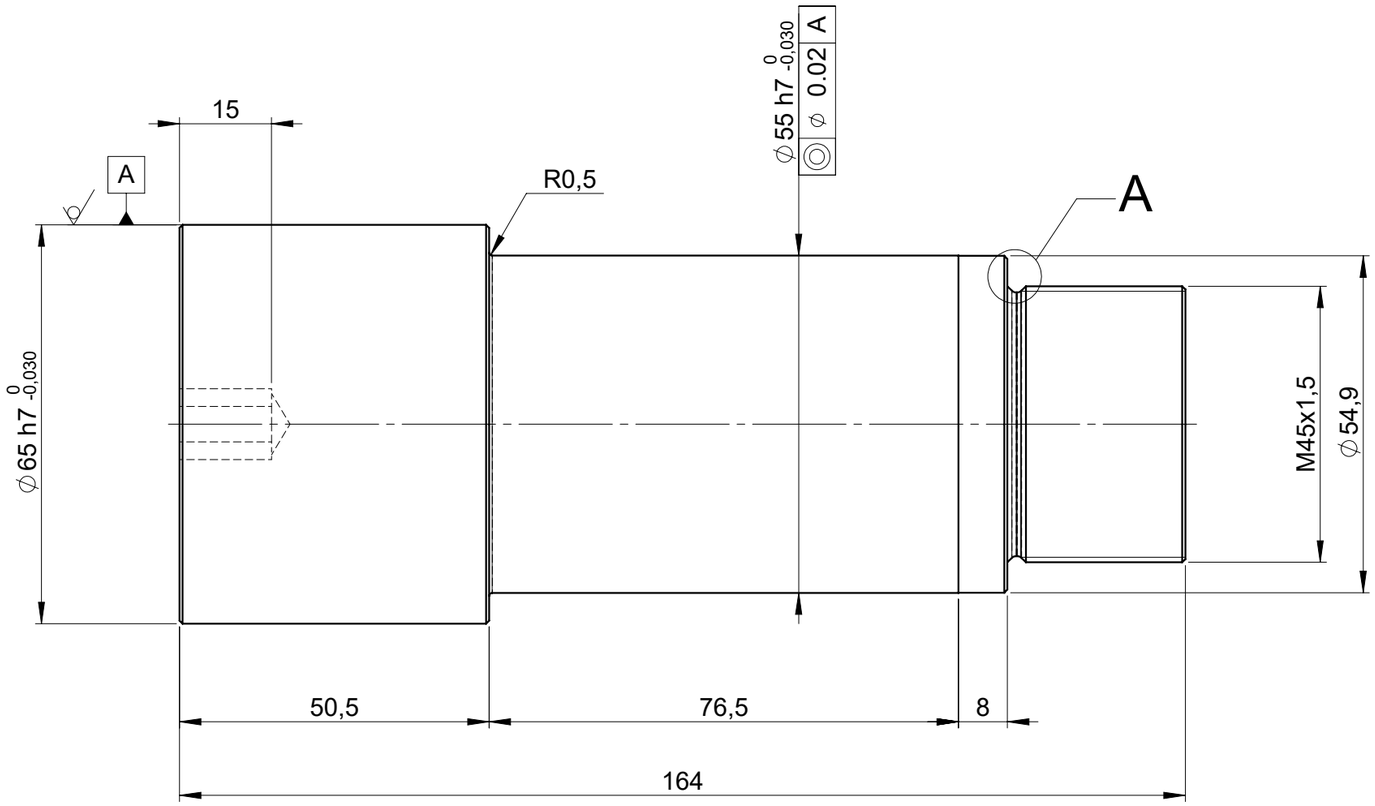

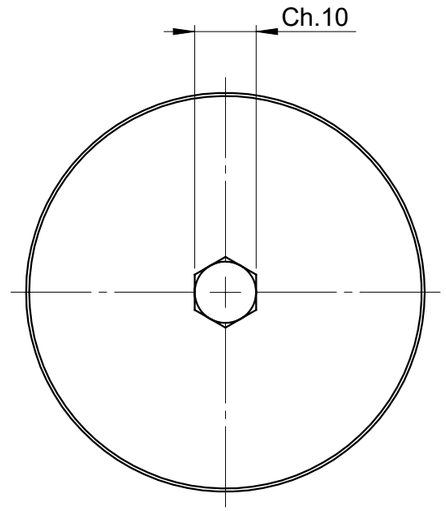

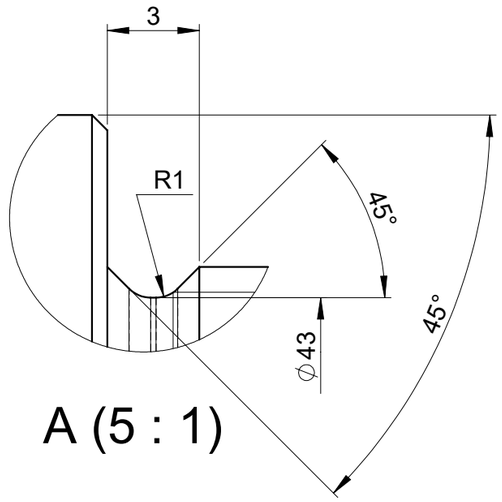

A (5 : 1)

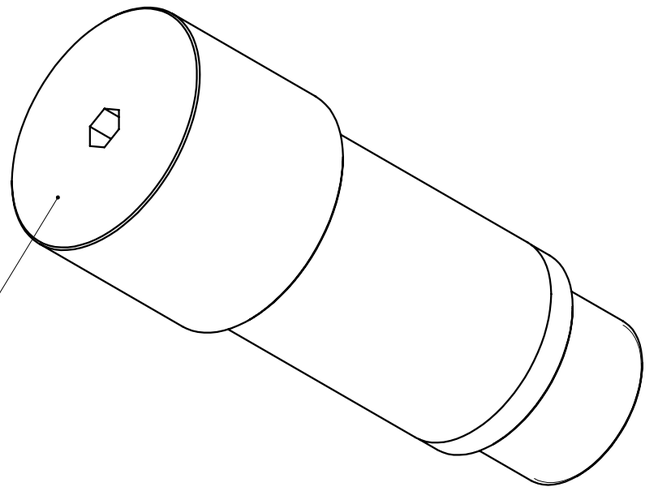

MARCARE CODICE
MARK CODE

3.2

1	ME0000003988		42CrMo4 (1.7225) - Bonificato	Barra Ø65 h7 - Rettificata / Round Bar Ø65 h7 - Grinded	1
POS. *POS.*	CODICE *CODE*	CODICE GEST. *CODE GEST.*	MATERIALE *MATERIAL*	MATERIALE GREZZO - COMPONENTI *RAW MATERIAL - COMPONENTS*	Qt.

DESCRIZIONE REVISIONE / *REVISION DESCRIPTION*

All proprietary rights reserved by Soc. Alphamac. This drawing shall not be reproduced, or in anyway utilised for the manufacture of the component or unit herein illustrated and must not be released to other parties without written consent. Any infringement will be legalty pursued

QUOTE SENZA INDICAZIONE DI TOLLERANZA: GRADO DI PRECISONE ISO2768
TOLLERANCES NOT SPECIFIED ON DIMENSION: PRECISION ISO2768: fH

RACCORDI NON QUOTATI / *UNQUOTED FILLETS*: R=1

SMUSSI NON QUOTATI / *UNQUOTED CHAMFERS*: 1x45°

TRATTAMENTO TERMICO / *HEAT TREATMENT*: -

DISEGNATORE / *DRAFT MAN*: Alphamac

DATA / *DATE*: 22/06/2023

TRATTAMENTO SUPERFICIALE / *SURFACE TREATMENT*: Fosfatazione / Phosphating

VALIDITA' / *STATE*: In work

SIMILE A / *SIMILAR*: ME0000002164

IMA ALPHAMAC
BOLOGNA - ITALY

DENOMINAZIONE / *DESCRIPTION* *FORK PIN*
PERNO FORCELLA

SCALA / *SCALE*: 1:1

MASSA / *MASS*(kg): 3.24

FOGLIO / *SHEET*: 1/1

CODICE / *DRAWING CODE*: ME0000003988

REV.

UNI A3 / ALPHAMAC