GENERAL TOLERANCES
Angular dimension +-1° - Roundness range of tolerance from IT4 to IT11. Must be contained within half of dimensional tolerance.
MACHINED holes H14 shafts h14 linear values Js14 -- ROUGH holes H16 shafts h16 linear values Js16
SHEETS cutting/laser cutting/punching Js13 holes H13 bending/pressing Js14 -- ALUMINIUM DIE CASTING Savio Norm 4011_1005_00
PLASTIC MATERIALS according to DIN 16901 -- CAST IRON Savio Norm 4011_1003_00
The general tolerances for ROUGH of plastic (DIN 16901) of aluminium (4011_1005_00), of CAST IRON (4011_1003_00), must be intended H for holes, h for shafts, Js for all the other dimensions

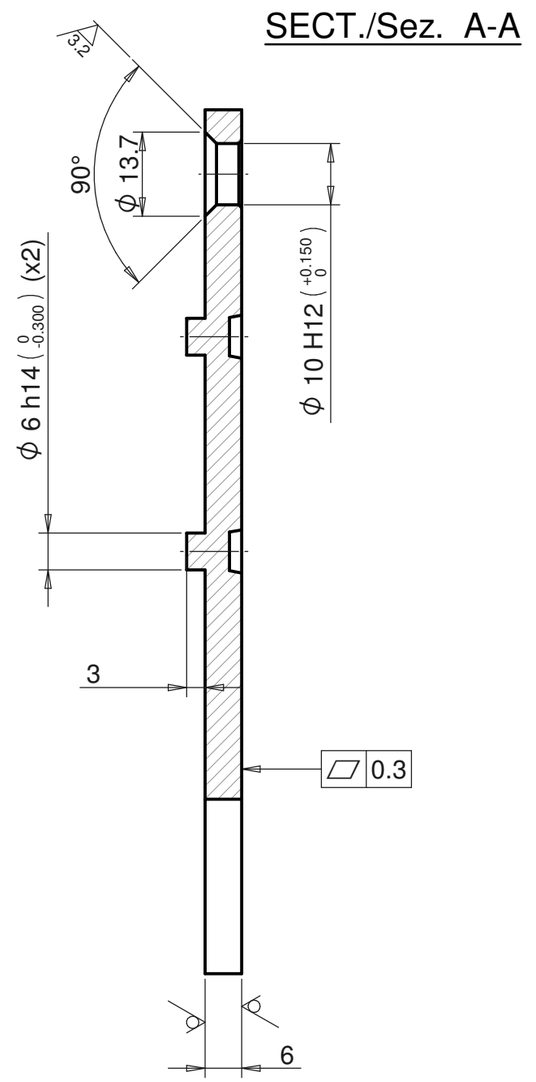

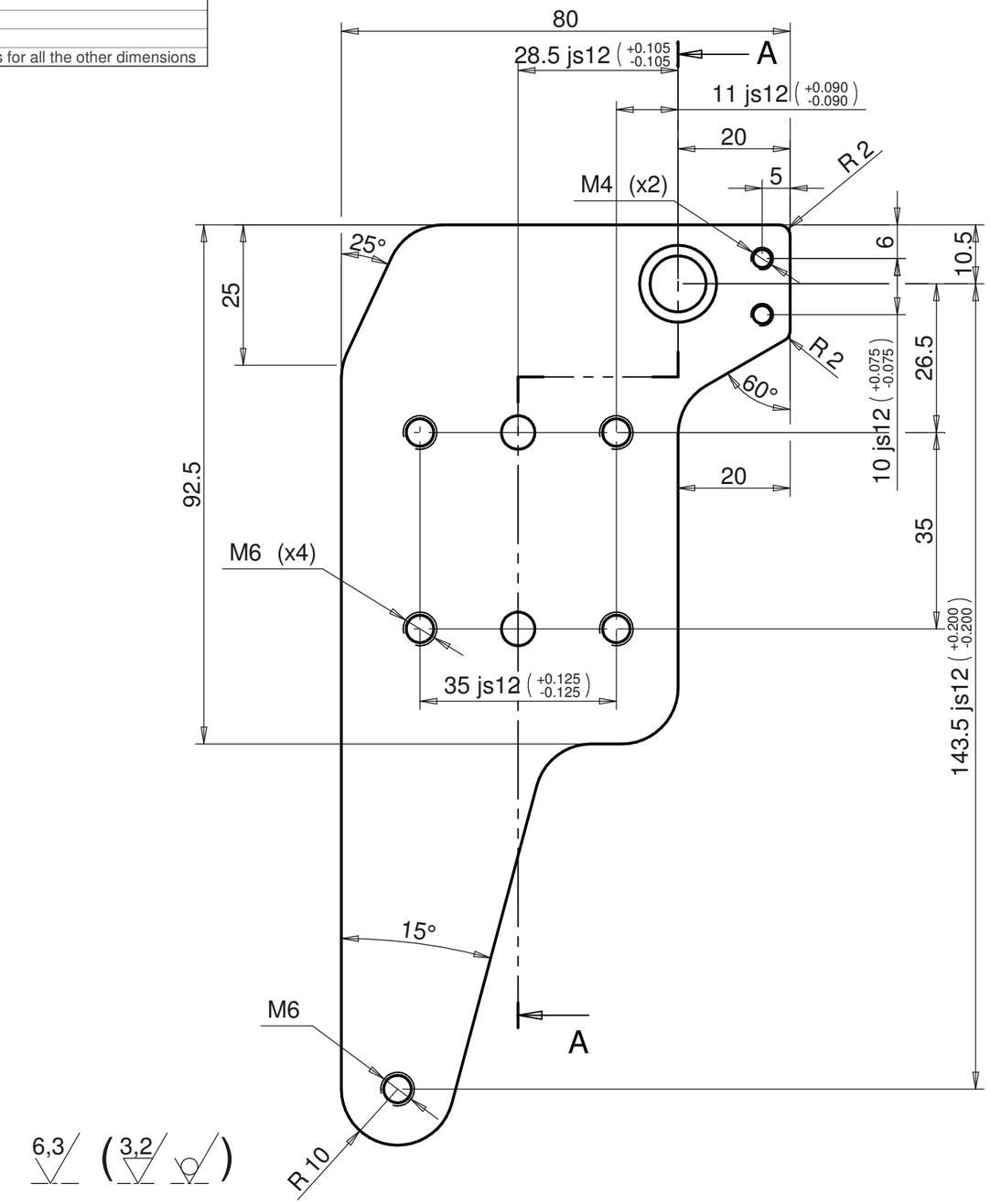

IN ALTERNATIVA ALLE BUGNATURE POSSONO ESSERE PIANTATE SPINE CILINDRICHE

- BAVA MAX 0,04
- MAXIMUM BURR

- RUGOSITA' FORI FILETTATI 3.2
- THREADED HOLES ROUGHNESS

- RACCORDI NON QUOTATI R10
- FILLETS WITHOUT DIMENSION

CN05014		20/09/2021	00
Change	Modification details:	Date Mod:	IRP

Approved

Changes to previous release:		Obtain from:	Substitute:
Material:	S235J2G3 +N UNI EN 10025	Code:	4032_6002_99
Supply state:	+N: NORMALIZING ROLLING	Dimensions:	
Thermic treat.:		Hardness(T):	
Surface treat.:		Hardness(S):	

DENOMINATION: SUPPORTO CONTROPUNTA INFILAGGIO MC. SX

Savio	Draw.: Enrico Gaiotto	Date: 06/07/2021	042336.0.0
	Mod. : Enrico Gaiotto	Sheet N°: 1/1	
	App. : Giuseppe Morini	Scale: 1:1	BRACKET

Reserved property of SAVIO MACCHINE TESSILI S.p.A. In accordance with the law, the contents of this drawing may not be re-produced or communicated to third parties.