STANDARD:	**WEIGHT IN AIR:** 0.260 kg
MATERIAL: 17.4PH - H1150 D	
COATING/COATING SPECIFICATION: CROMATURA VEDI NOTA	
TOLERANCES/TOLERANCES SPECIFICATION:	

ROUGHNESS:

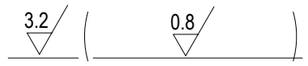

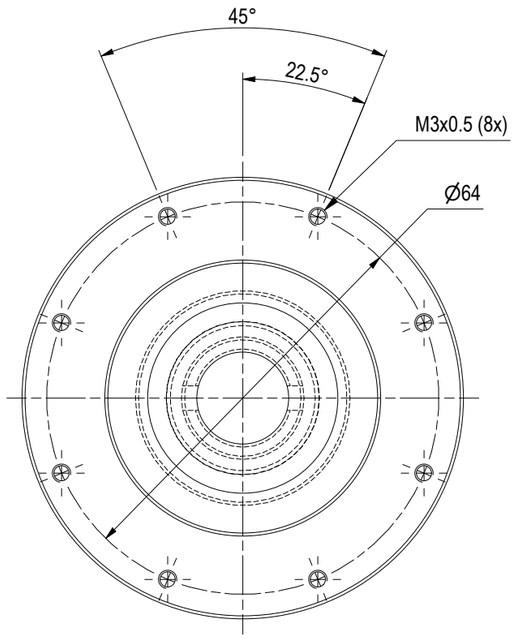

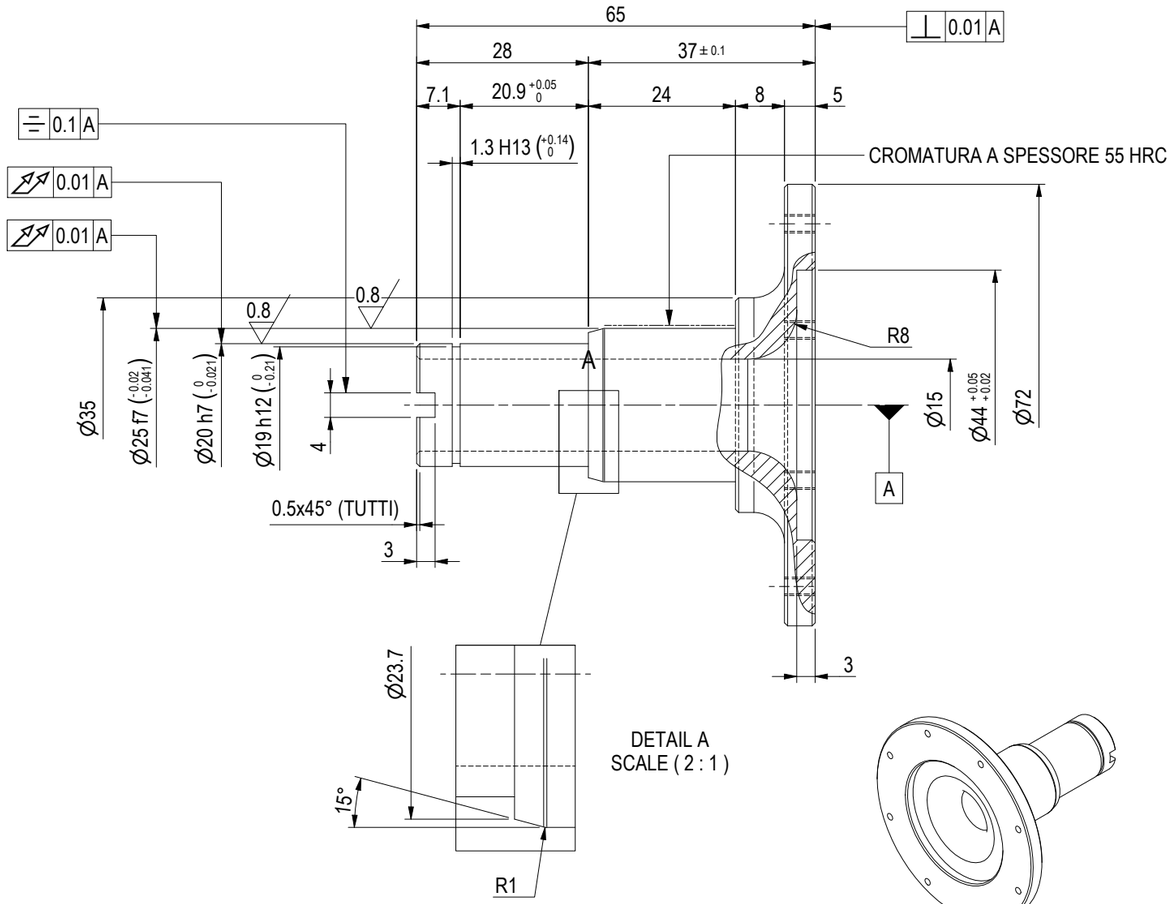

REV.	DATE	ISSUE DESCRIPTION	PREPARED BY	CHECKED BY	APPROVED BY
01	25/01/2024	FIRST ISSUE	A. TOMIO	L. SAVI	A. MUTTON

DOCUMENT NUMBER: 2335-DMC-0102-016-01		REV. 01	CLASS
DOCUMENT TITLE: DRIVE SHAFT			
SCALE 1 : 1	SHEET 1 of 1	SIZE A3	decadesign s.r.l. mechanical engineering

THIS DOCUMENT IS EXCLUSIVE PROPERTY OF DECA DESIGN s.r.l. AND CANNOT BE REPRODUCED OR USED WITHOUT DECA DESIGN s.r.l. WRITTEN APPROVAL. ALL RIGHTS ARE RESERVED.