GENERAL TOLERANCES
Angular dimension +-1° - Roundness range of tolerance from IT4 to IT11. Must be contained within half of dimensional tolerance.
MACHINED holes H14 shafts h14 linear values Js14 -- ROUGH holes H16 shafts h16 linear values Js16
SHEETS cutting/laser cutting/punching Js13 holes H13 bending/pressing Js14 -- ALUMINIUM DIE CASTING Savio Norm 4011_1005_00
PLASTIC MATERIALS according to DIN 16901 -- CAST IRON Savio Norm 4011_1003_00
The general tolerances for ROUGH of plastic (DIN 16901) of aluminium (4011_1005_00), of CAST IRON (4011_1003_00), must be intended H for holes, h for shafts, Js for all the other dimensions

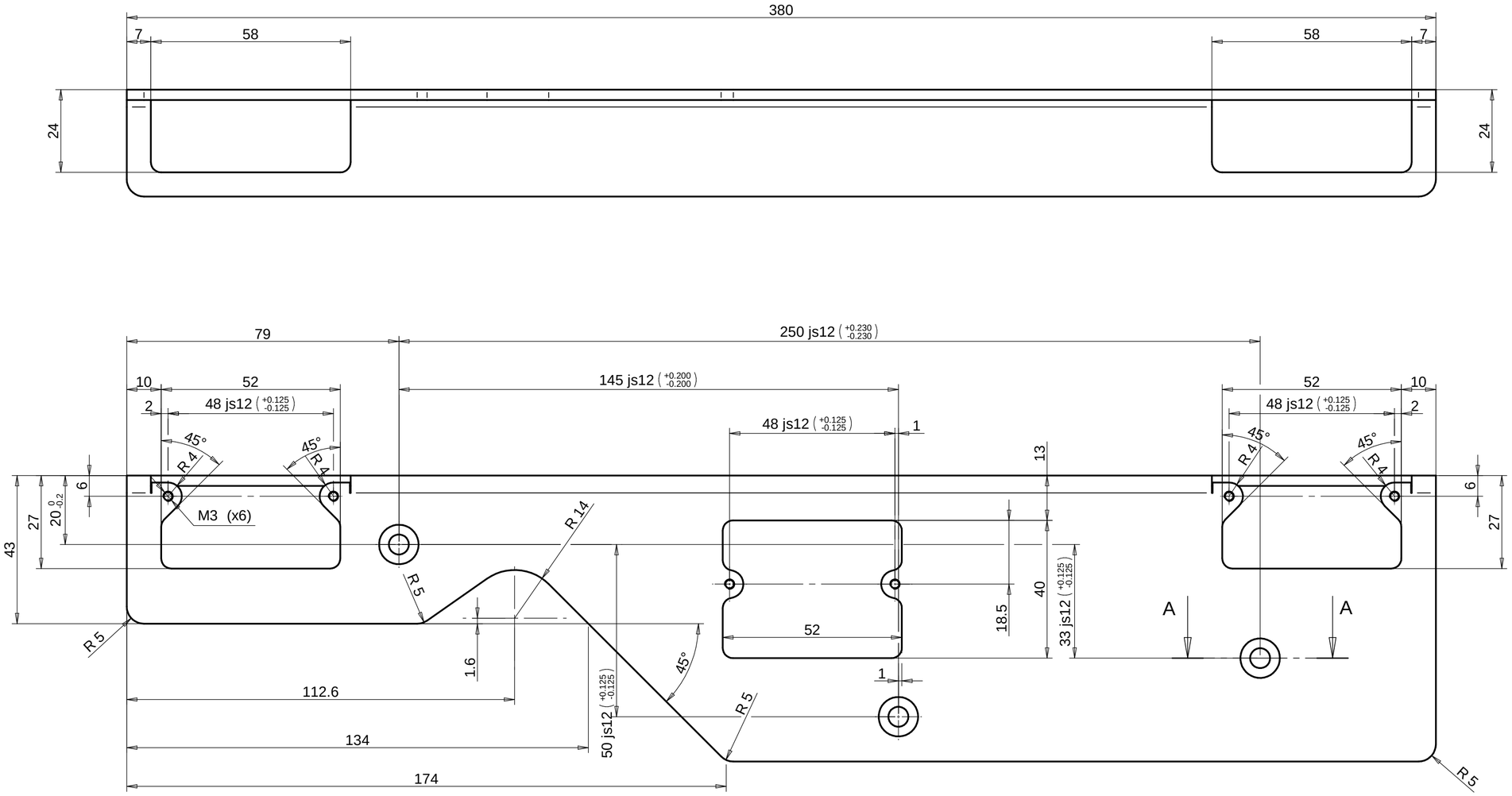

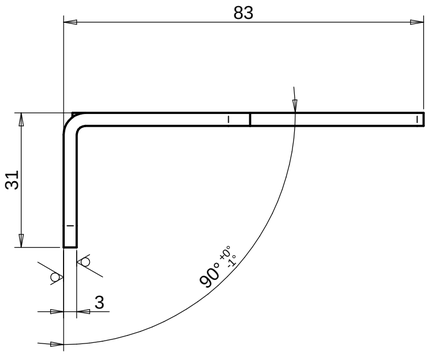

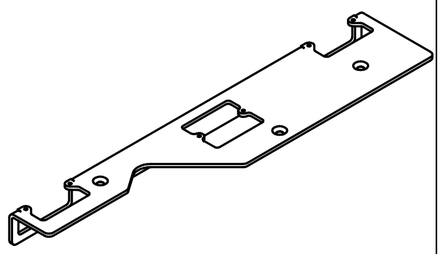

SECT./Sez. A-A

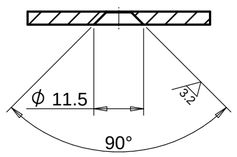

-ESENTE DA BAVE
-FREE OF BURRS

-RACCORDI NON QUOTATI R3
-FILLETS WITHOUT DIMENSION

-RUGOSITA' FORI FILETTATI 3.2
-THREADED HOLES ROUGHNESS

-RAGGI INTERNI DI PIEGATURA R2
-INTERNAL BENDING RADIUSES

6.3 (3.2)

CN05626	QUOTA 380 ERA 369, SPOSTATO FORO ZONA F3	04/04/2022	04
Change	Modification details:	Date Mod:	IRP

Changes to previous release:		Obtain from:	Substitute:
Material:	S235J2G3 +N UNI EN 10025	Code:	4032_6002_99
Supply state:	+N: NORMALIZING ROLLING	Dimensions:	
Thermic treat.:		Hardness(T):	
Surface treat.:	Cataphoresis epoxy graphite black RAL9011 4010-0003-00	Hardness(S):	

DENOMINATION: GUIDA INFERIORE DISCO DOSATORE MC. DX

Ros s.r.l.
Via Crosera, 42 - Zona Industriale
33082 AZZANO DECIMO (PN)
Tel. 0434 633318 r.a. - Fax 0434 640639
C.F. e P. IVA 01278530934

Draw.:	Enrico Gaiotto	Date:	06/04/2021
Mod. :	Enrico Gaiotto	Sheet N°:	1/1
App. :	Giuseppe Morini	Scale:	1:1

041190.1.0

GUIDE