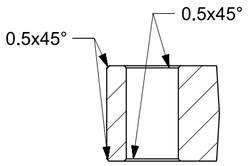

SECTION E-E

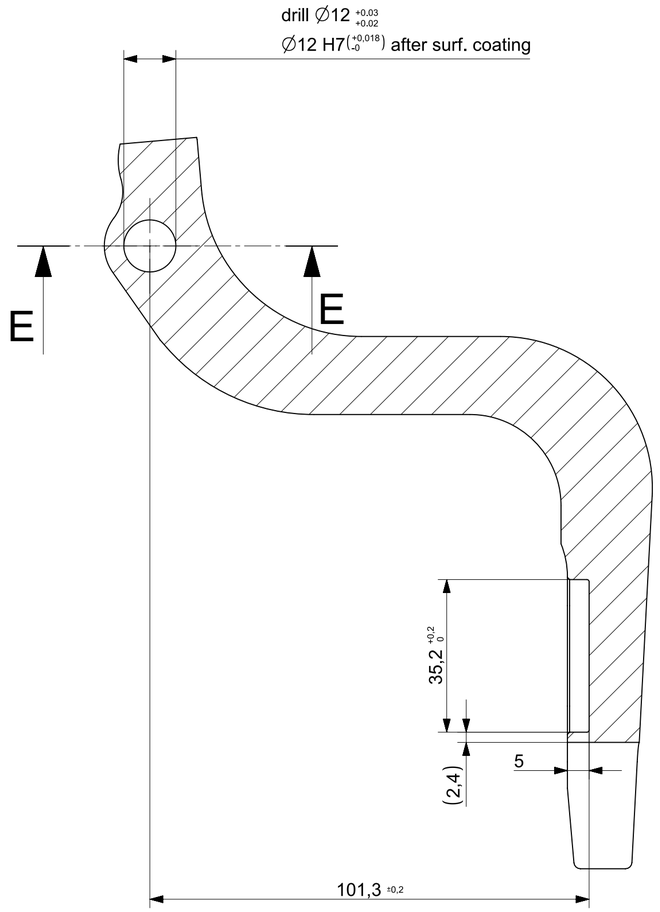

SECTION D-D

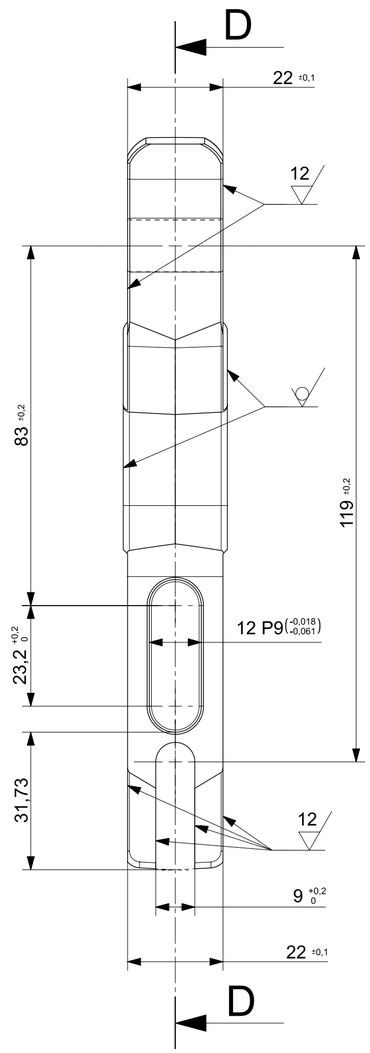

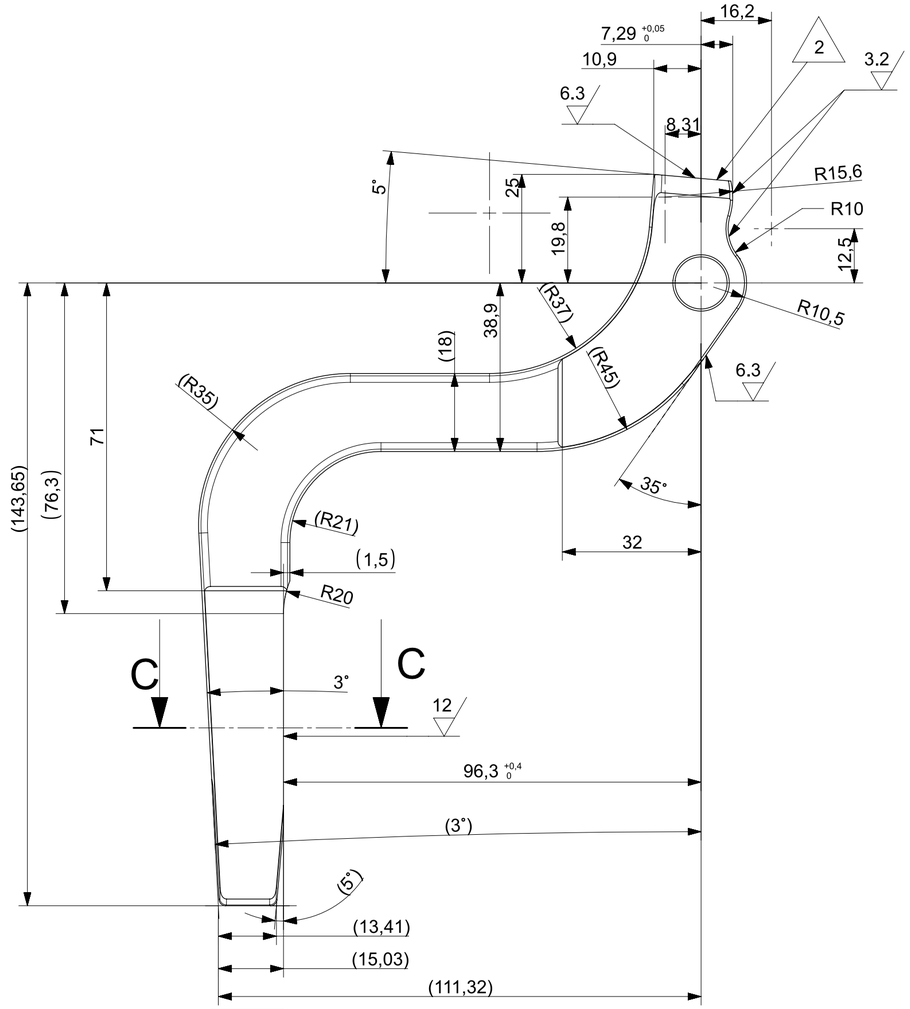

SECTION C-C

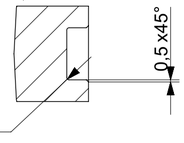

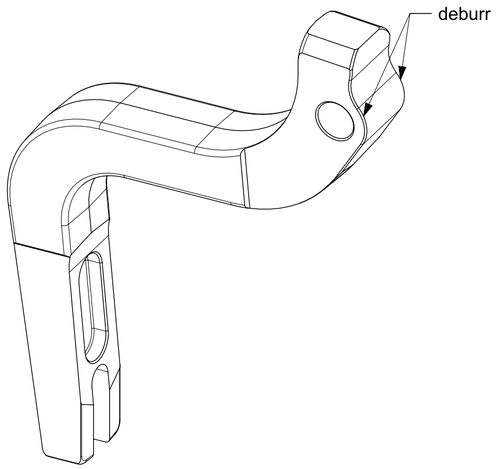

Revision	Revision Description	User	Date
3	RDM1118-changed drawing according to T&M tooling and requests	gdp	02/09/2021
2	RDM1118_preliminary-added grinding (reference plane)	gdp	31/05/2021

Key Safety/Key Tech. feature: KSx and KTx — According to PMP Tab. IO.07.QA.01_P

PMP — THE APPLICATION SPECIALIST

NOTE: Piece without burrs or sharp edges — ISO13715 -0.2 -0.1 / +0.5 +0.3

Unquoted Chamfers: 1x45°
Unquoted Fillets: R 0.4-0.8

Gen. Tol. Machined Surfaces	Gen. Tol. Welded Constructions	Gen. Tol. Casted Parts	Gen. Tol. Forged Parts
UNI EN 22768/2 - fH	EN-ISO 13920 B-F	UNI EN ISO 8062 - CT9	UNI EN 10243 - gr. F

Scale	Sheet	of	Size	Checked	Approved
1:1	1	1	A2	gdp	gdp

Date	Drawn by	Mass - kg (±5%)
25/01/2021	gdp	0,8

Description: Parking brake lever - PMS875RC

Description2: Leva freno Neg. PMS855 RC v2

Material & Heat Treatment Raw Part: EN10083-3 39NiCrMo3 / +QT - UNI 10990 (bonificato / quench.&temp) / 270-320 HB

Heat Treatment Machinet Part:

Heat Treatment Depth After Machinig Process:

Surface Hardness:

Coating / Surface Treatment: UNI EN ISO 4042 (Zinc Coated) - Fe/Zn12/A

Mechanical Strenght:

Core Hardness:

Replaces:

1.6 (3.2 6.3 12 = unquoted surf.)

Raw Mat. Drawing: 615.0056/G

Drawing number: 615.0056 — Rev. 3

PROPERTY OF THIS DRAWING IS PROTECTED ACCORDING TO THE LAW. IS FORBIDDEN TO REPRODUCE AND/OR DISCLOSE IT TO OTHER PARTIES WITHOUT OUR WRITTEN AUTHORIZATION