GENERAL TOLERANCES
Angular dimension +-1° - Roundness range of tolerance from IT4 to IT11. Must be contained within half of dimensional tolerance.
MACHINED holes H14 shafts h14 linear values Js14 -- ROUGH holes H16 shafts h16 linear values Js16
SHEETS cutting/laser cutting/punching Js13 holes H13 bending/pressing Js14 -- ALUMINIUM DIE CASTING Savio Norm 4011_1005_00
PLASTIC MATERIALS according to DIN 16901 -- CAST IRON Savio Norm 4011_1003_00
The general tolerances for ROUGH of plastic (DIN 16901) of aluminium (4011_1005_00), of CAST IRON (4011_1003_00), must be intended H for holes, h for shafts, Js for all the other dimensions

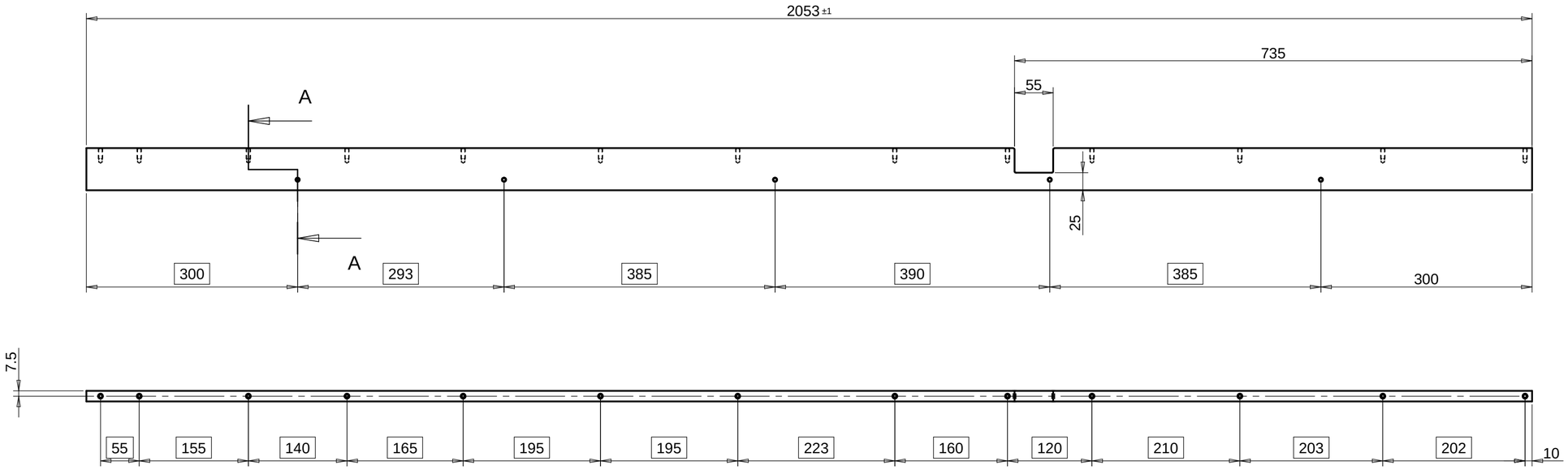

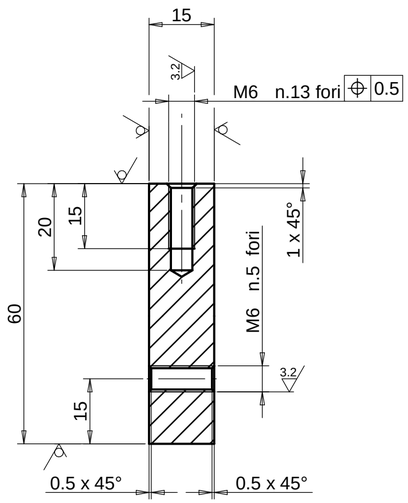

SECT./Sez. A-A
SCALE/Scala: 1:1

6.3 (3.2)

BAVA MAX 0.04
MAXIMUM BURR

CN06205		13/10/2022	00
Change	Modification details:	Date Mod:	IRP
Changes to previous release: SPOSTATO FORO ZONA I5	Obtain from:	Substitute: 037690.0.0	
Material: S275J2G3 +C UNI EN 10025	Code: 4032_5328_99		
Supply state: +'C': COLD DRAWN	Dimensions:		
Thermic treat.:	Hardness(T):		
Surface treat.: Fe/Zn 8÷12 A HP UNI ISO 2081 free Cr VI	Hardness(S):		

DENOMINATION: ASTA PREPARATORE

Ros s.r.l.
Via Crosera, 42 - Zona Industriale
33082 AZZANO DECIMO (PN)
Tel. 0434 633318 r.a. - Fax 0434 640639
C.F. e P. IVA 01278530934

Draw.: Enrico Gaiotto	Date: 07/10/2022	037690.3.0	
Mod. : Enrico Gaiotto	Sheet N°: 1/1		
App. : Stefano Malfante	Scale: 1:5	SHAPED ROD	