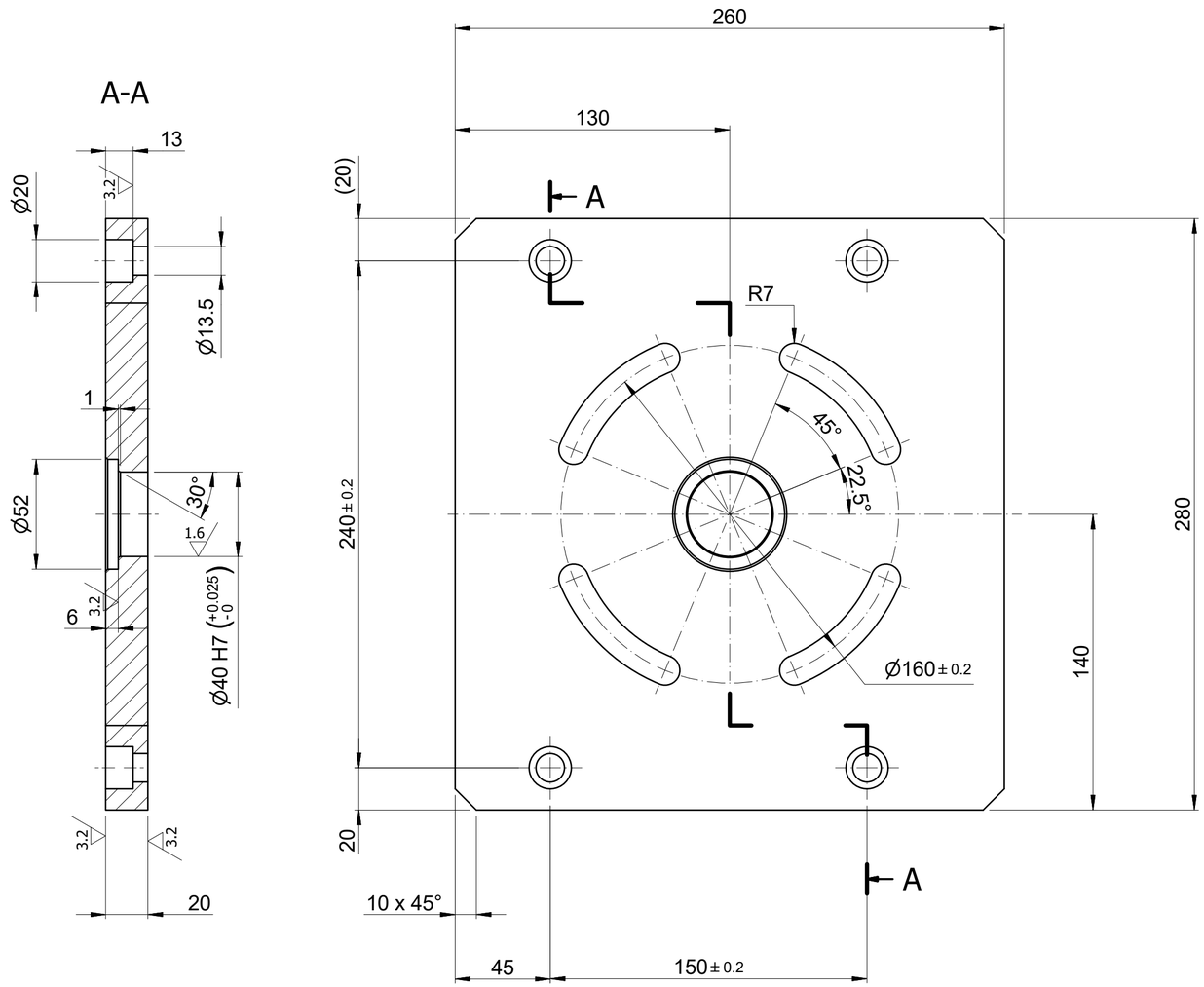

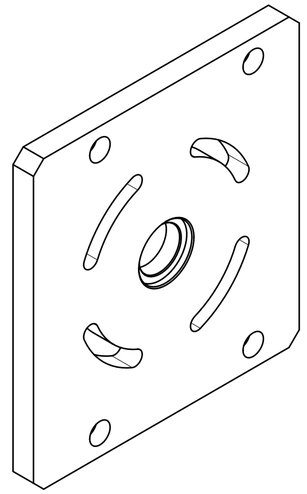

Rev.	Date	Revisions description	Drawn by	Checked by	Approved by
00	07 OCT 2022	ISSUED	PICENIS	SIMONATO	-

Material 1 (where not indicated on drawing) S275JR – EN 10025-2 | State of supply Mat.1 Danieli Supply Std. | Supply Class | Pattern DB

Material 2 | State of supply Mat.2 Danieli Supply Std. | Supply Class | Casting code

Material 3 | State of supply Mat.3 Danieli Supply Std. | Supply Class

Heat Treatment

On Drawing Symbol, if required,

Coating NIE – ELECTROLYTIC NICKELING | MINIMUM EFFECTIVE DEPTH [mm]

On Drawing Symbol, if required, SURFACE HARDNESS [HV]

Unquoted radius	Unquoted bevels	Dimensions without tolerance as per	Roughness	Prec.Class	Max.Welding Class
0.8 (mm)	1X45 (mm)	DANIELI STD 2.4.103	DANI STD 2.4.105 12.5 [3.2 1.6]	B	

Project Name

DANIELI

Job nr

Obtained from

Replaces

Classification MACHINED PLATE

Weight (Kg) 13

J (Kgm²)

Title MACHINED PLATE

Scale 1:2

DANIELI Part Number 000-000-296-901

Revision 00

Format A2

CUSTOMER Part Number

Revision

Nr. of sheets 001

Sheet 001 Follow

copyright c 2022 danieli & c. officine meccaniche s.p.a. – all rights reserved. confidential. property of danieli & c. officine meccaniche s.p.a. unauthorized reproduction, copying, distribution or any other use of the whole or any part of this documentation is strictly prohibited.

File drw0013654388.idw

COMPUTER AIDED DESIGN – I