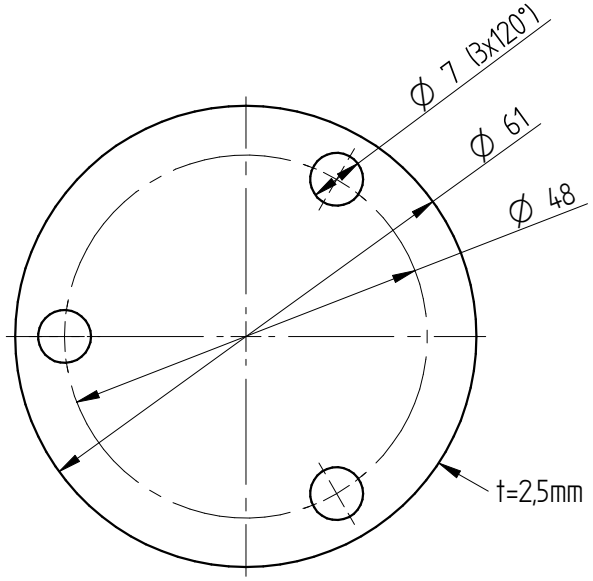

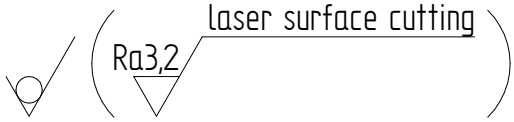

Surface treatment:
Galvanic zinc coating+
Powder paint for outdoor application (UV-resistent)
Black RAL 9005 matte

ISO 13715 +0,1 +0,2

ISO 13715 -0,1 -0,2

DETAILED INFORMATION CAN BE TAKEN BY THE DXF OR STEP FILE.

General tolerances for manufacturing processes	Mechanical production turning, milling and bending	ISO 2768-mk	Thermal cutting	ISO 9013	Welding construction	ISO 13920	Metal moulded parts	ISO 8062	Plastic moulded parts	ISO 20457
Geometrix product specification According to GPS rules	Fundamentals, concepts principles and rules	ISO 8015	Tolerances of form, orientation, location and run-out	ISO 1101	Welding joint	ISO 2553	Work piece edge	ISO 13715	Surface condition	ISO 1302

Revision	Version	Description of the change	Date	Creator	Approver

Scale 1 : 1	Material S355JR	Surface treatment see legend			Weight 0.06 kg
Page size A4	Status of drawing Released	Item number SFHW0165	Revision 00	Version A	Page 1/1
Dimensioning unit mm	Creator MartinGs	Approver MartinGs			IDDOK "dft" 523461
Projection method	Create date 03.02.2023	Approve date 03.02.2023	Description Cover		

ISO 16016 The reproduction, distribution and utilization of this document as well as the communication of its contents to others without express authorization is prohibited. Offenders will be held liable for the payment of damages. All rights reserved in the event of the grant of a patent, utility model or design.