GENERAL TOLERANCES
Angular dimension +-1° - Roundness range of tolerance from IT4 to IT11. Must be contained within half of dimensional tolerance.
MACHINED holes H14 shafts h14 linear values Js14 -- ROUGH holes H16 shafts h16 linear values Js16
SHEETS cutting/laser cutting/punching Js13 holes H13 bending/pressing Js14 -- ALUMINIUM DIE CASTING Savio Norm 4011_1005_00
PLASTIC MATERIALS according to DIN 16901 -- CAST IRON Savio Norm 4011_1003_00
The general tolerances for ROUGH of plastic (DIN 16901) of aluminium (4011_1005_00), of CAST IRON (4011_1003_00), must be intended H for holes, h for shafts, Js for all the other dimensions

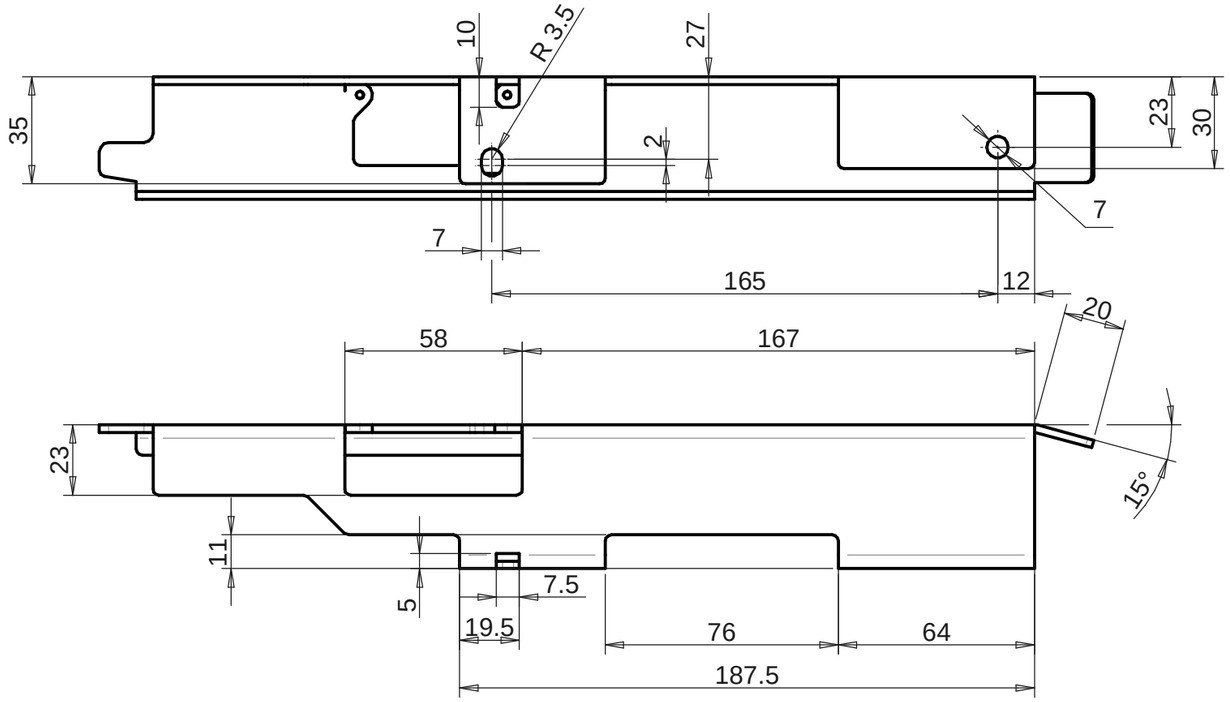

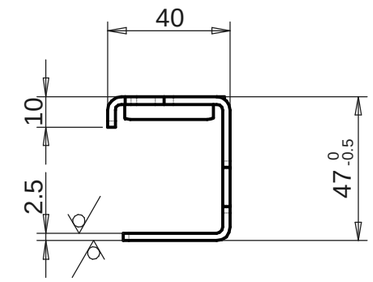

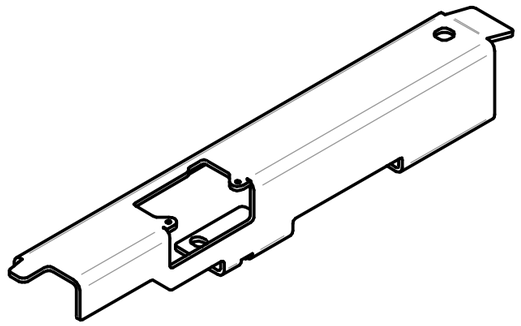

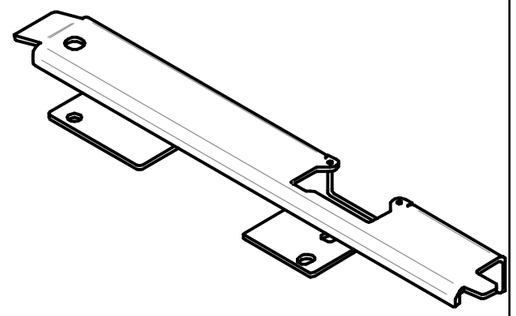

- BAVA MAX 0,04
- MAXIMUM BURR

- RACCORDI NON QUOTATI R2
- FILLETS WITHOUT DIMENSION

- RAGGI INTERNI DI PIEGATURA R2
- INTERNAL BENDING RADIUSES

6.3 (3.2)

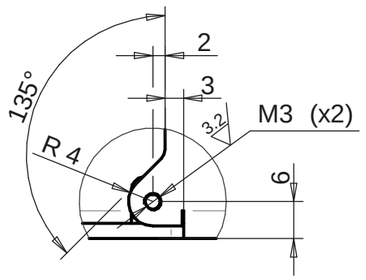

DET./Part. A
SCALE/Scala: 1:1

CN06428		20/01/2023	00
Change	Modification details:	Date Mod:	IRP
Changes to previous release:	MOD. ZONA A4-B4 E ASOLE - FORI (B5-D5)	Obtain from:	Substitute: 049292.1.0
Material:	S235J2G3 +N UNI EN 10025	Code:	4032_6002_99
Supply state:	+N: NORMALIZING ROLLING	Dimensions:	
Thermic treat.:		Hardness(T):	
Surface treat.:	Cataphoresis epoxy graphite black RAL9011 4010-0003-00	Hardness(S):	
Weigth:	0.5 kg	Volume:	60365.85 mm^3

DENOMINATION: GUIDA PULITRICE SX

Draw.: Michele Simonatto	Date: 18/02/2022	049292.2.0	
Mod. : Enrico Gaiotto	Sheet N°: 1/1		
App. : Stefano Malfante	Scale: 1:10	GUIDE	