Review			
Rev.	Desccription	Data	Approved
1	Modifeid external shape	25/01/2017	A.Canziani

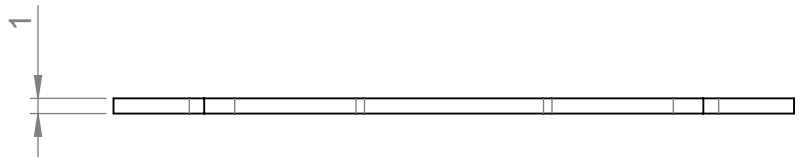

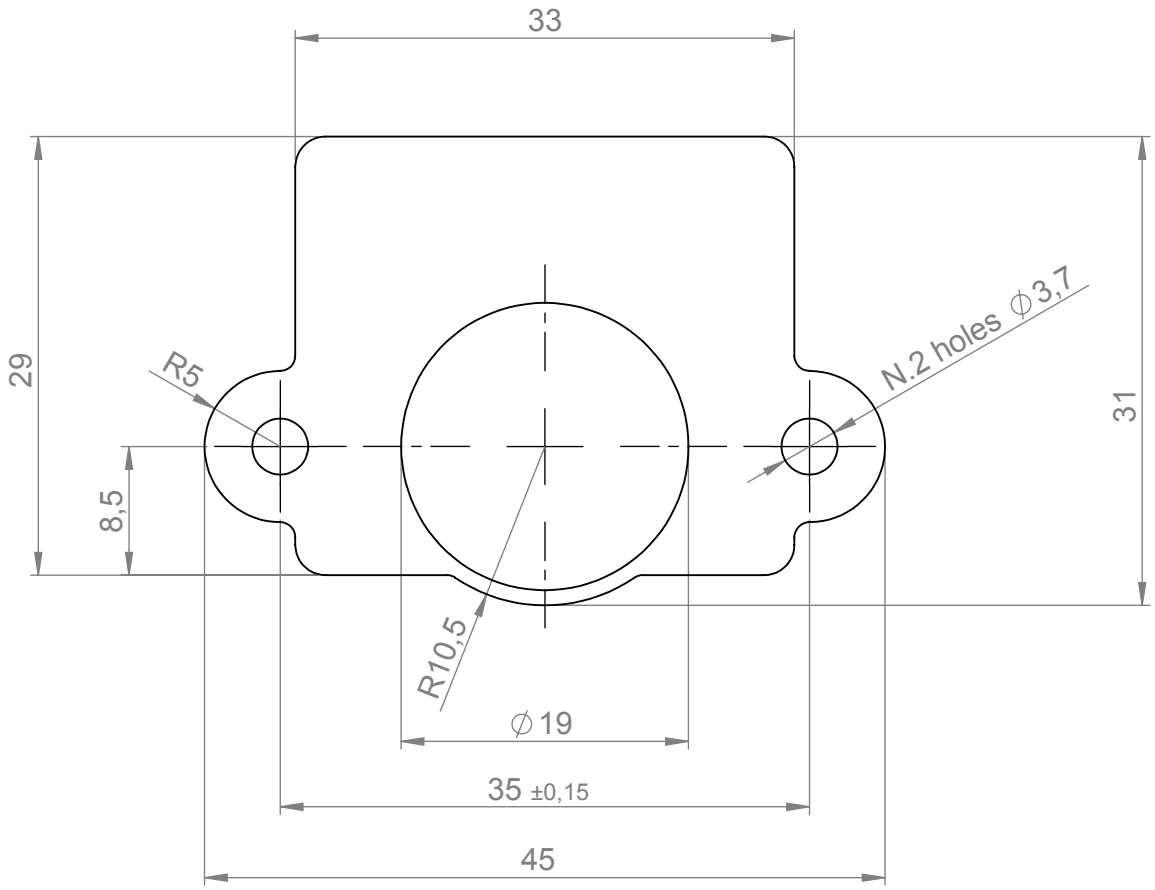

DRAWN	Missero	COLOR	WEIGHT (g) 6
DATE	09/07/2014	TREAT/FINISH	Electrodeposited coating ISO 2081 - Fe/Zn 12 A
APPROVED	Missero	MATERIAL	Fe360
DATE	09/07/2014	TITLE	PLATE
+V = INCREASE WITH DRAFT -V = DECREASE WITH DRAFT			

DIMENSION ARE IN MILLIMETERS
CHAMFER WITHOUT DIMENSIONING: 0.5x45°
RADIUS WITHOUT DIMENSIONING: R0.5
GENERAL TOLERANCES: UNI EN 22768 m-H
UNI EN 12020-2

CODE
520PIAT003A00

REV. 01

SCALE 2:1

SHEET 1*of* 1