Detta dokument utlämnat till

This document issued to .....

Original format size A3

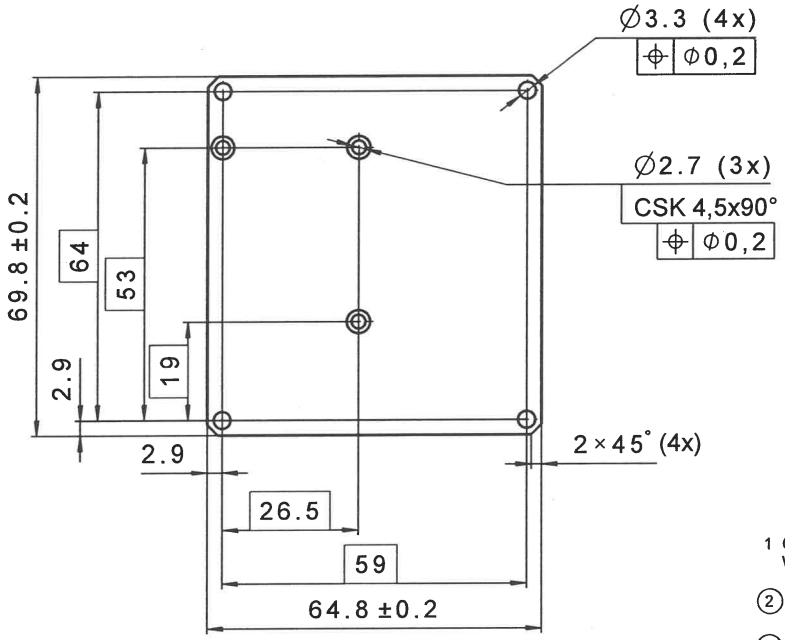

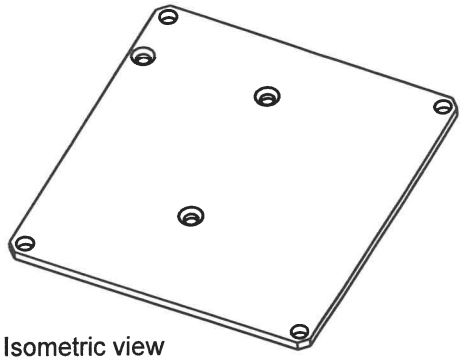

Isometric view

1 OM EJ ANNAT ANGES SÅ GÄLLER MÅTT ENLIGT 3D MODELL
WHERE OTHERWISE NOT STATED, DIMENSIONS ACCORDING TO 3D MODEL . B

(2) MATERIAL: ALUMINIUM EN-AW 6082-T6/T651.

(3) YTBEHANDLING / SURFACE TREATMENT TCP (Trivalent Chromium Pretreatment)
IN ACCORDANCE WITH MIL-DTL-5541 TYPE II CLASS 3
REF. TRADEMARKS: SURTECH 650 OR CHROMITAL TCP B

Generella krav där ej annat anges/ Unless otherwise specified			Infoklass/ Classification	Company Restricted			
Tolerans/tol allmänna/gen	Tolerans/tol ISO 2768-1 m	Tolerans/tol gängor/threads		Sign		År-Månad-Dag Year-Month-Day	
			Ritad/Drawn	STANDN		2017-08-11	
Tolerance Vinklar/Angles	Skarpa kanter brytes/Break sharp edges 0,1-0,3		Skala/Scale 1:1	Classification export control Not export controlled			
			Projekt/Project	FOG			
Ytjämnhet/ Surface rough Ra 3,2	Ytbehandling/ Surface treat (3)	Material (2)	Benämning/Name HEAT SINK		B	8-44849	1733
					A	8-32695	0539
					Utg/ Issue	ÄO nr/ECO No	ÅÅVV/ YYWW
			Ritnings nr/Dwg No R-8088112-006			Blad/Sheet 1/1	

PREMEK HI TECH s.r.l.
Via J. Linussio, 3/5
33170 PORDENONE
P.IVA 01114050931

4 3 2 1