GENERAL TOLERANCES
Angular dimension +-1° - Roundness range of tolerance from IT4 to IT11. Must be contained within half of dimensional tolerance.
MACHINED holes H14 shafts h14 linear values Js14 -- ROUGH holes H16 shafts h16 linear values Js16
SHEETS cutting/laser cutting/punching Js13 holes H13 bending/pressing Js14 -- ALUMINIUM DIE CASTING Savio Norm 4011_1005_00
PLASTIC MATERIALS according to DIN 16901 -- CAST IRON Savio Norm 4011_1003_00
The general tolerances for ROUGH of plastic (DIN 16901) of aluminium (4011_1005_00), of CAST IRON (4011_1003_00), must be intended H for holes, h for shafts, Js for all the other dimensions

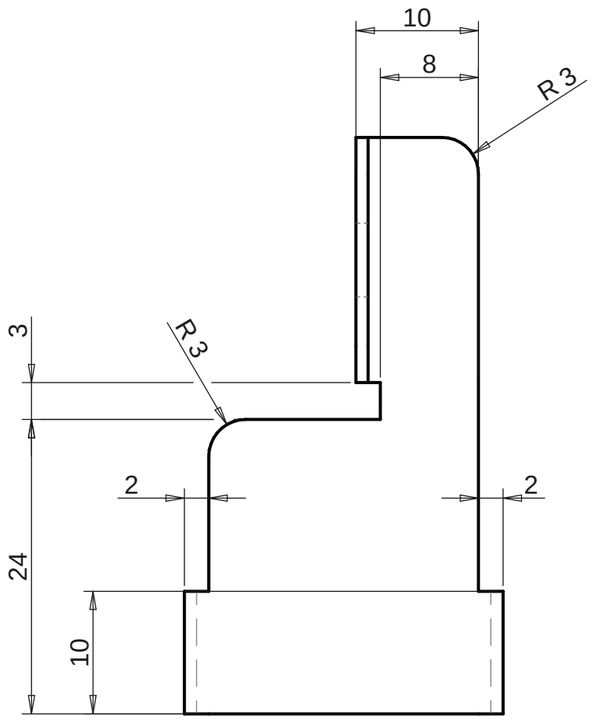

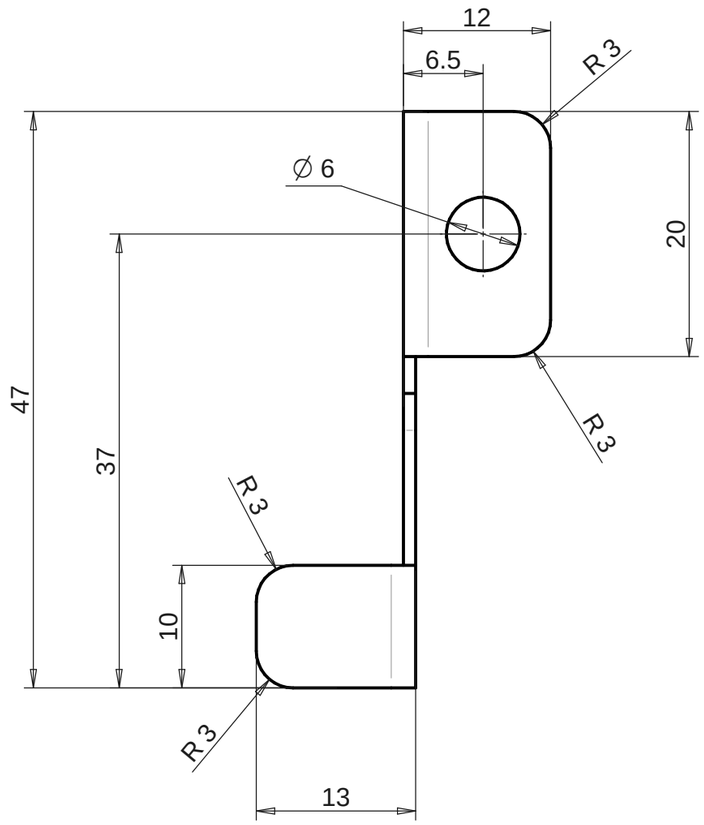

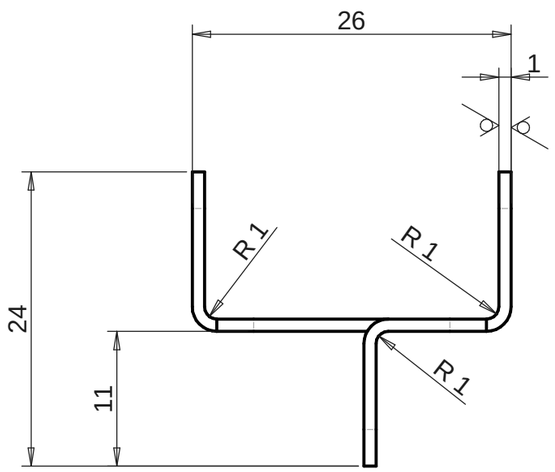

6.3 (✓)

RAGGI NON QUOTATI R=3
BAVA MAX 0.04

CN06476					00
Change		Modification details:		Date Mod:	IRP
Changes to previous release:			Obtain from:	Substitute:	
Material:	S235J2G3 +N UNI EN 10025		Code:	4032_6002_99	
Supply state:	+N: NORMALIZING ROLLING		Dimensions:		
Thermic treat.:			Hardness(T):		
Surface treat.:	Cataphoresis epoxy graphite black RAL9011 4010-0003-00		Hardness(S):		
Weigth:	9.3 g	Volume: 1182.52 mm^3			

Working

DENOMINATION: PIASTRINA

SAVIO	Draw.: Michele Simonatto	Date: 02/02/2023	055603.0.0
	Mod. : Michele Simonatto	Sheet N°: 1/1	
	App. :	Scale: 2:1	BRACKET

Reserved property of SAVIO MACCHINE TESSILI S.p.A. In accordance with the law, the contents of this drawing may not be re-produced or communicated to third parties.