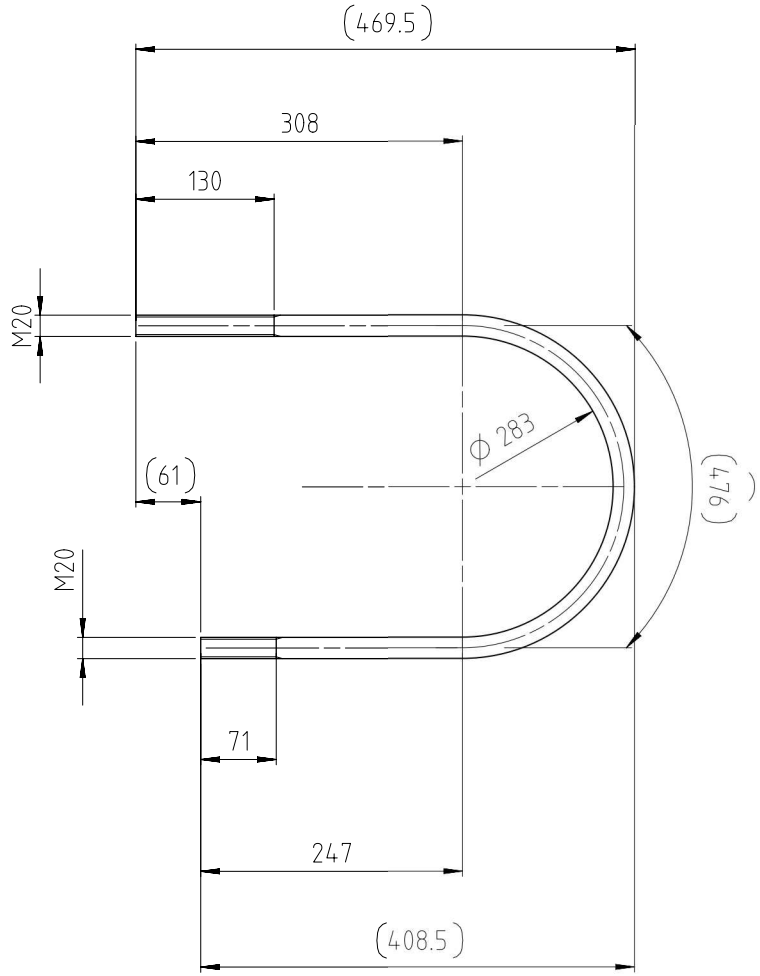

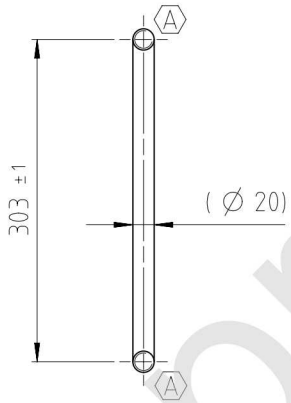

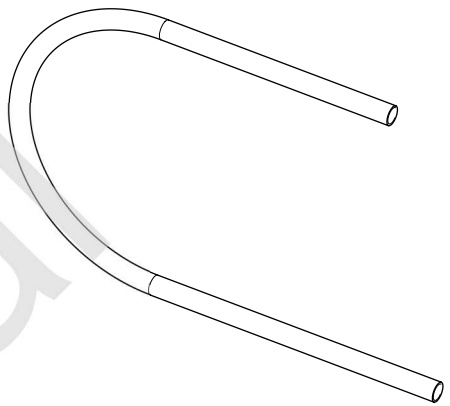

ISO 13715 |-0.5

ELECTRODEPOSITED COATING ISO2081 Fe/Zn/12/A

QTY	SEQ NO	Material ID	Material Name / Dimension, Occ	Standard or Drawing ID	Basic Material / Material Standard	Net Weight	Gross Weight
1	1	PAAF032237	ROUND BAR 20h9*1033	EN 10278	S355J2C+C EN 10277		

Modif.	Rev	Number	Creation	Approval	Rev	Number	Creation	Approval	Rev	Number	Creation	Approval
					–	CN-A067140	10.05.17 joj001	12.05.17 tla012	A			

GENERAL TOLERANCES FOR MACHINED MEASURES ISO 2768-mK

NOMINAL MEASURE OVER	NOMINAL MEASURE MAX	TOLERANCES
0.5	3	±0.1
3	6	±0.1
6	30	±0.2
30	120	±0.3
120	400	±0.5
400	1000	±0.8

U-SHAPED FASTENER
FOR HELMHOLTZ RESONATOR

Net Weight 2.1

Size	Material ID	Material Rev
A3	PAAF625668	A

Page	Drawing ID	Drawing Rev
1/1	DAAF375238	A

DID - DIMENSIONAL DRAWING - Confidential

For Approval