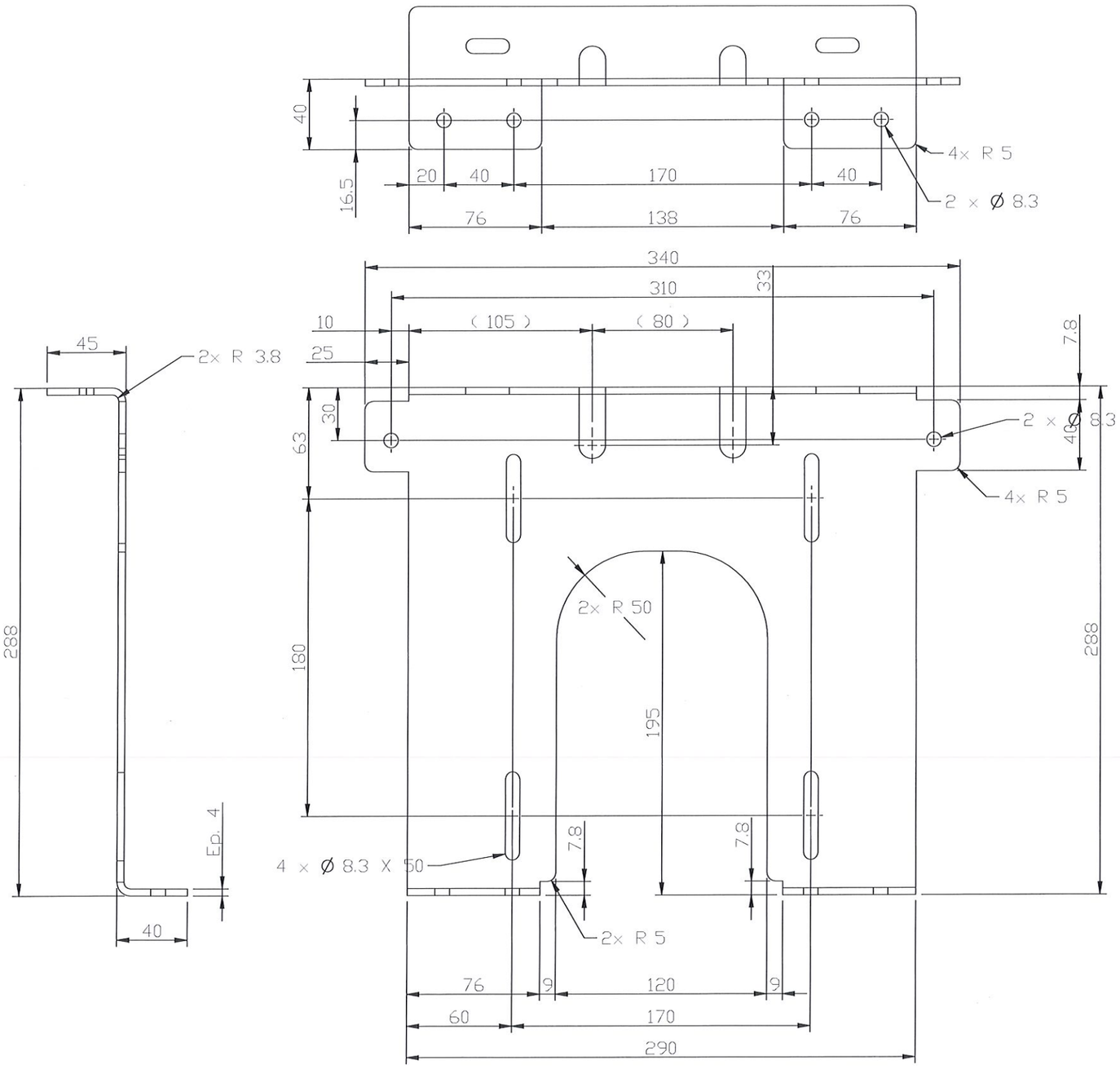

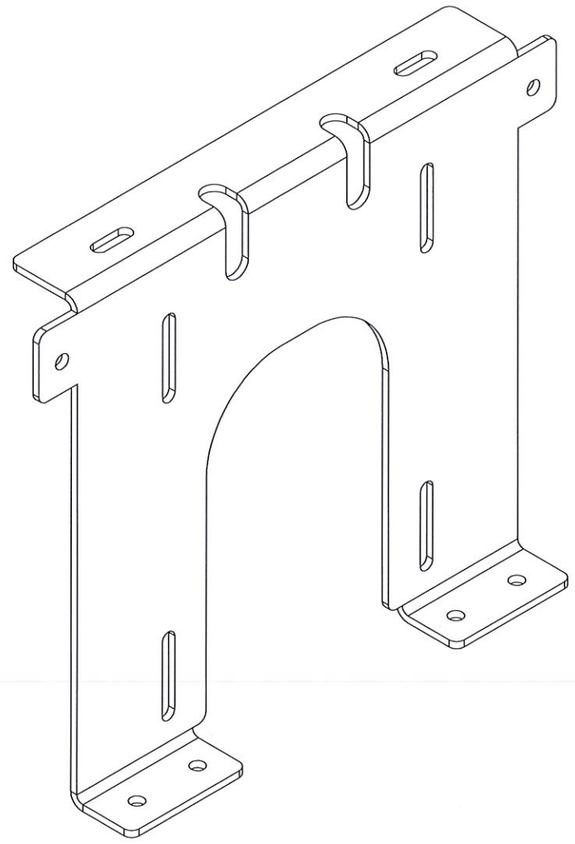

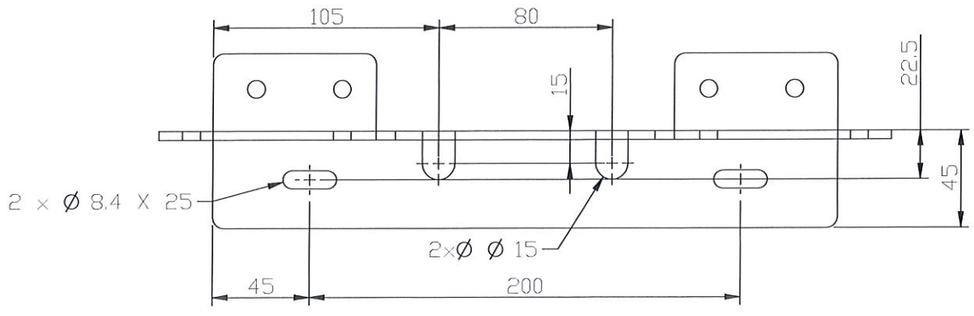

25/11/2020	ARU	04/01/2021	CHO	EDITION ORIGINALE
DATE CREATION CREATION DATE	DESSINE PAR DRAWN BY	DATE VERIFICATION CHECKED DATE	VERIFIE PAR CHECKED BY	DESIGNATION

MATIERE / MATERIAL	PROTECTION / FINISH	TOLERANCES GENERALES GENERAL TOLERANCES		FORMAT	ECHELLE / SCALE	MASSE / WEIGHT
_S235JR	ZN	ISO 2768-1 fH		A2	1:2	2.35 Kg

Ros s.r.l.
Via Crosera, 42 - Zona Industriale
33082 AZZANO DECIMO (PN)
Tel. 0434 633318 r.a. - Fax 0434 640639
C.F. e P. IVA 01278530934

NUMERO / NUMBER	GAMME / RANGE	CONFIGURATION	FOLIO	N° DE PLAN / DRAWING NUMBER	REV.
S998	Ros s.r.l. Via Crosera, 42 - Zona Industriale 33082 AZZANO DECIMO (PN) Tel. 0434 633318 r.a. - Fax 0434 640639 C.F. e P. IVA 01278530934	AA	1/1	IF0001014	