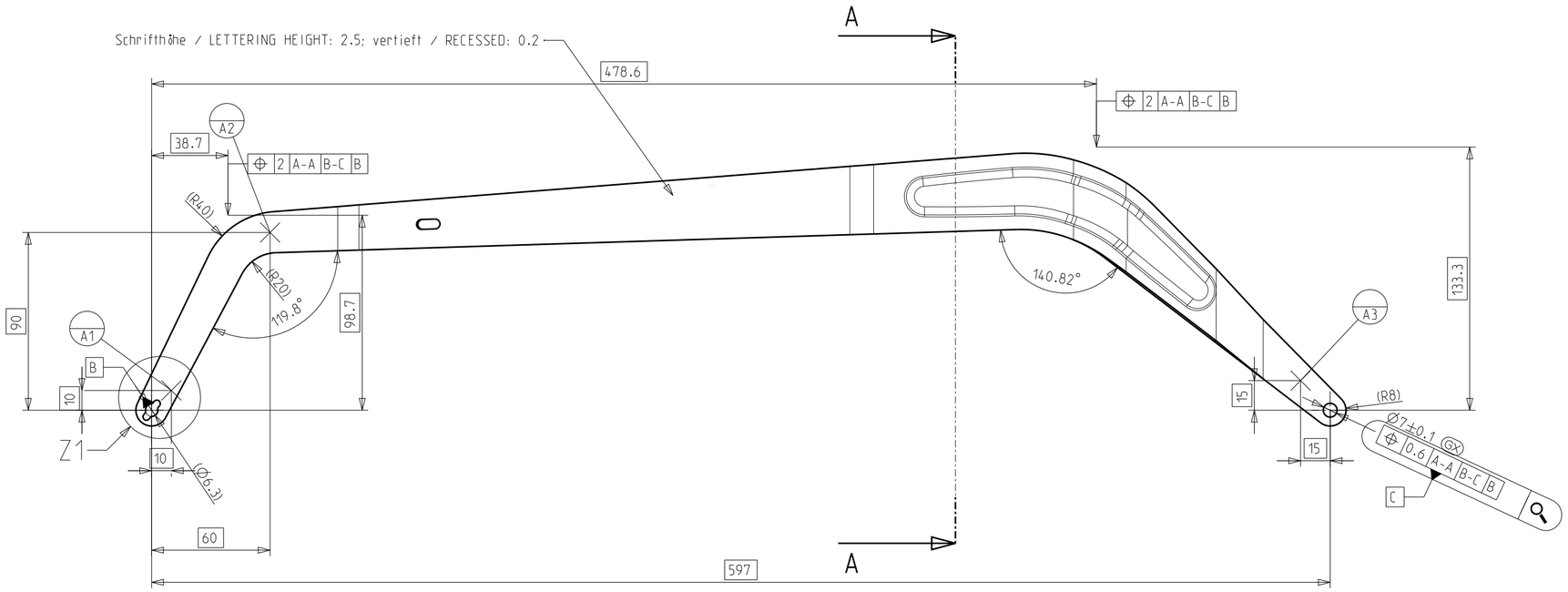

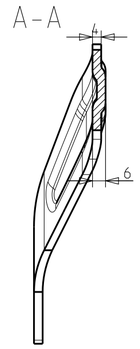

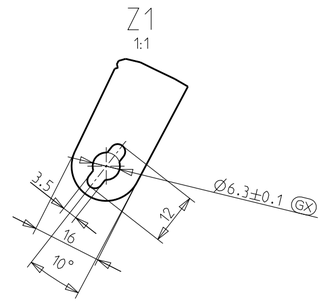

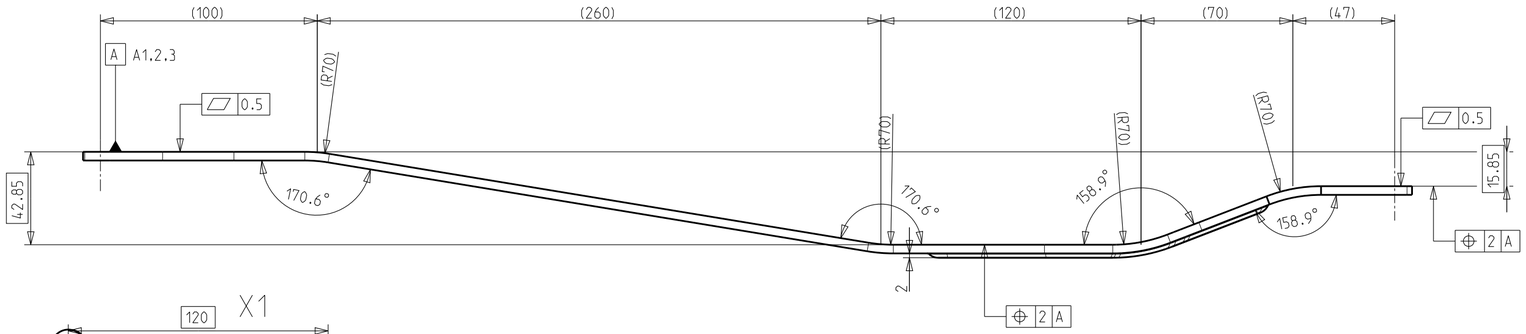

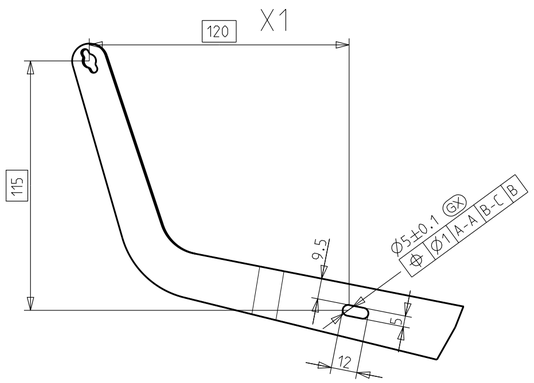

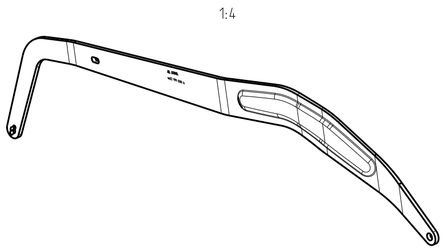

Ebene Bezugselemente werden nach Gauß gebildet
PLAIN DATUMS GENERATED BY LEAST SQUARE ZONE

CAD-Masse/CAD-MASS : 625.7 g

CAD-Dichte/CAD-DENSITY: 7.80 g/cm³

⚠ Reduzierte CAD-Zeichnung / REDUCED CAD-DRAWING

Allgemeintoleranzen / GENERAL TOLERANCES: DIN 6930 - m

Blechdicke bis / SHEETMETAL THICKNESS UP TO

	Stanztoleranzen / PRESSED TOLERANCES 1	3	6	Biegetoleranzen / BENDING TOLERANCES 1	3	6
Länge / LENGTH						
bis / UP TO 6	±0.10	±0.15	±0.20	±0.2	±0.3	±0.4
10	±0.15	±0.20	±0.25	±0.3	±0.4	±0.5
25	±0.20	±0.25	±0.30	±0.4	±0.5	±0.6
63	±0.25	±0.30	±0.40	±0.5	±0.6	±0.8
160	±0.30	±0.40	±0.50	±0.6	±0.8	±1.0
Radien / RADII						
bis / UP TO 6	±0.2	±0.3	±0.5	±0.4	±0.6	-
10	±0.3	±0.4	±0.5	±0.6	±1.0	±1.2
25	±0.4	±0.5	±0.6	±1.0	±1.2	±1.5
63	±0.5	±0.6	±0.8	±1.2	±1.5	±2.0

Winkel an ebenen Stanzteilen
ANGULAR DIMENSIONS OF FLAT STAMPINGS
Nennmaß des kürzeren Schenkels
NOMINAL SIZE OF THE SHORTER LEG
bis / UP TO 10 ±1°30′ 63 ±50′ 160 ±25′

Schutzvermerk ISO 16016 beachten
THE REPRODUCTION, DISTRIBUTION AND UTILIZATION OF THIS DOCUMENT AS WELL AS THE COMMUNICATION OF ITS CONTENTS TO OTHERS WITHOUT EXPLICIT AUTHORIZATION IS PROHIBITED. OFFENDERS WILL BE HELD LIABLE FOR THE PAYMENT OF DAMAGES. ALL RIGHTS RESERVED IN THE EVENT OF THE GRANT OF A PATENT, UTILITY MODEL OR DESIGN.

Dokumentstatus (leeres Feld = kein offizieller Stand)
DOCUMENT STATUS (EMPTY FIELD = NO OFFICIAL STATE)

Werkstoff / MATERIAL

Halbzeug / SEMIFINISHED PRODUCT

Oberfläche / SURFACE

Oberflächenzeichen
SURFACE SYMBOLS

Werkstückkanten / EDGES ISO 13715

PROJECTION 1

DIMENSIONS IN MM

Konstrukteur / DESIGNER (Revision 1)

Änderungsauftr./CHANGE ORDER

Benennung
PART-NAME

Teile-Nr.
PART-NO.

SAP Teil/PART
Revision

Maßstab / SCALE	Original	Blatt/SHEET
1:2	DIN A2	1

Für Lieferant / FOR SUPPLIER