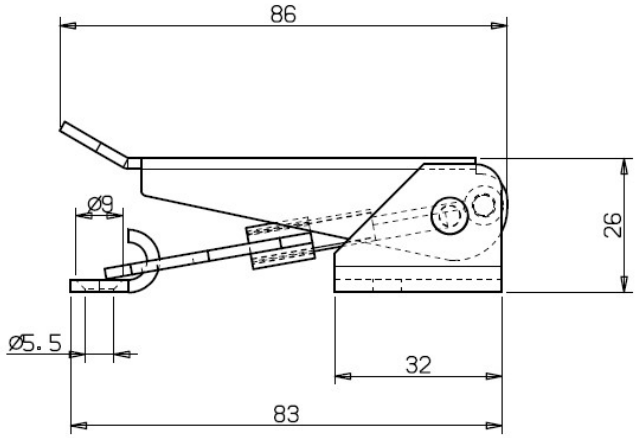
86
Ø9
26
Ø5.5
32
83

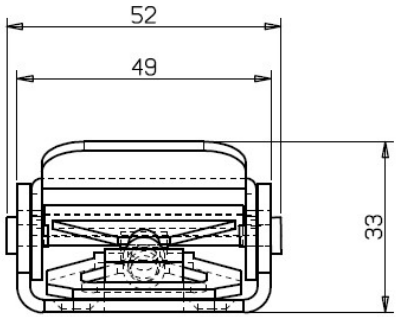
52
49
33

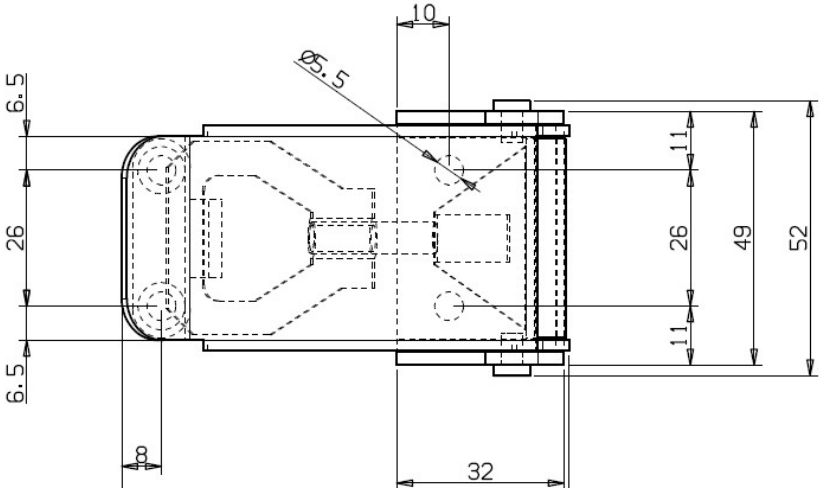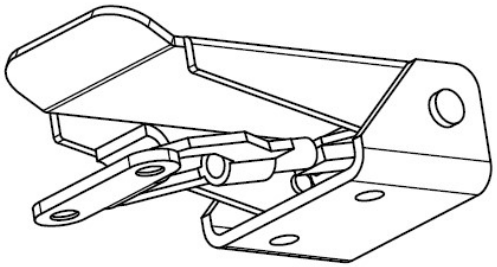
10
Ø5.5
6.5
26
6.5
11
26
11
49
52
8
32