GENERAL TOLERANCES
Angular dimension +-1° - Roundness range of tolerance from IT4 to IT11. Must be contained within half of dimensional tolerance.
MACHINED holes H14 shafts h14 linear values Js14 -- ROUGH holes H16 shafts h16 linear values Js16
SHEETS cutting/laser cutting/punching Js13 holes H13 bending/pressing Js14 -- ALUMINIUM DIE CASTING Savio Norm 4011_1005_00
PLASTIC MATERIALS according to DIN 16901 -- CAST IRON Savio Norm 4011_1003_00
The general tolerances for ROUGH of plastic (DIN 16901) of aluminium (4011_1005_00), of CAST IRON (4011_1003_00), must be intended H for holes, h for shafts, Js for all the other dimensions

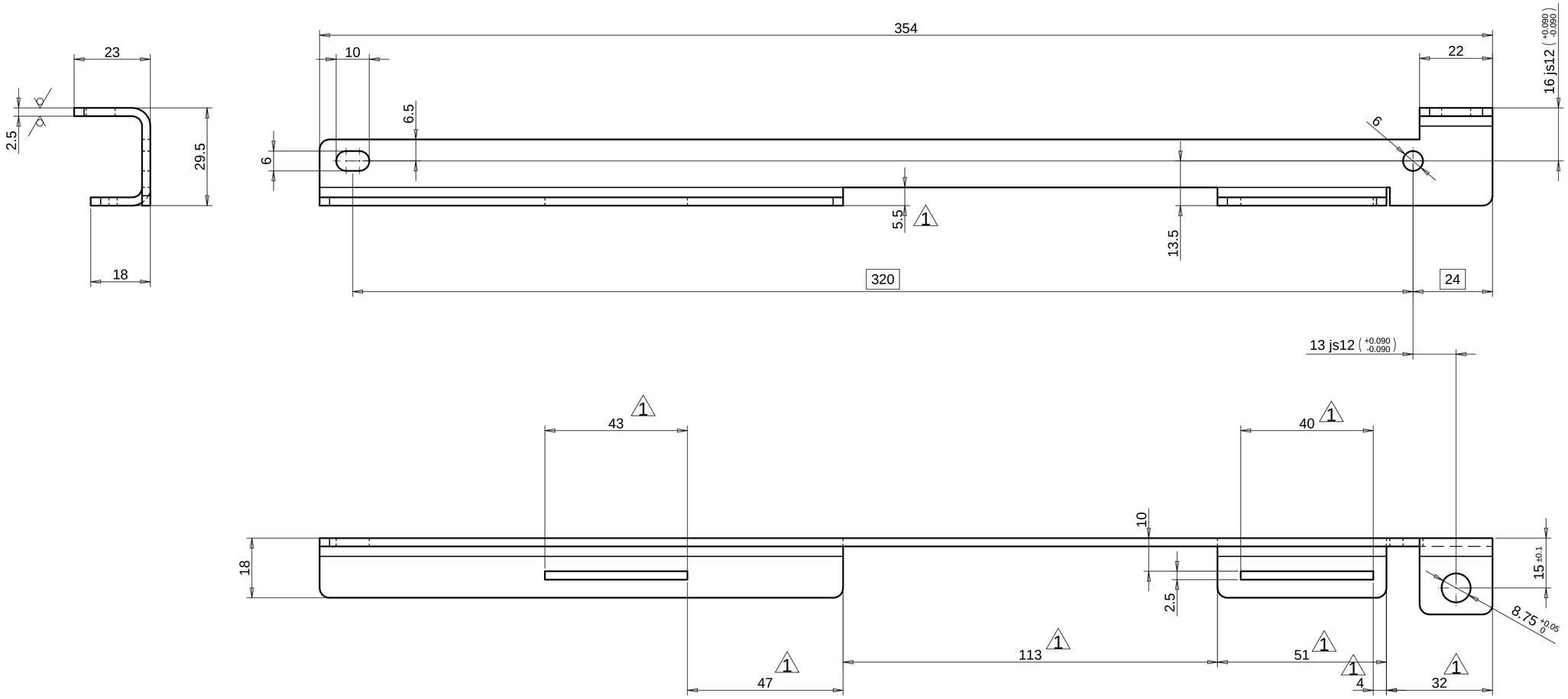

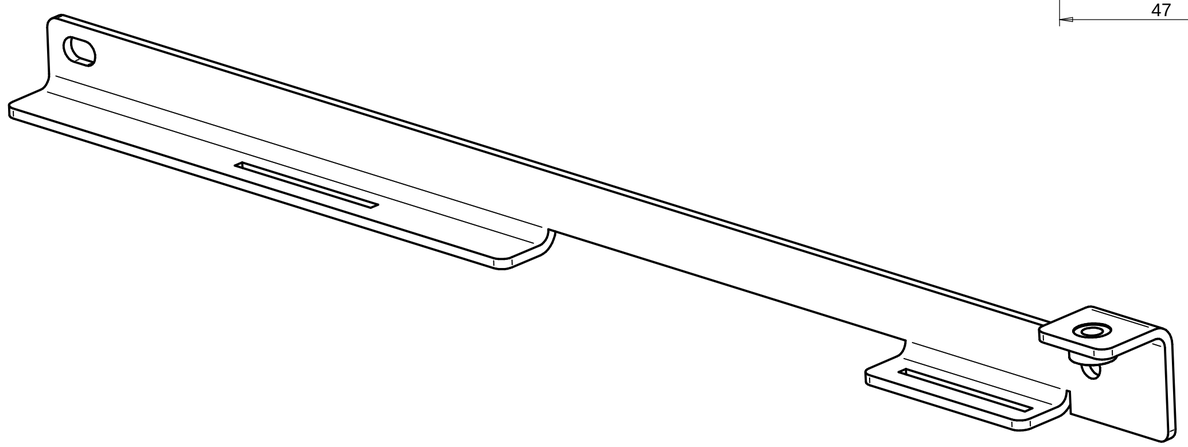

0.2

BAVA MAX 0.04/MAXIMUM BURR
RAGGI DI PIEGA R 3/BENDING RADIUS
RAGGI NON QUOTATI R3/FILLETS WITHOUT DIMENSION

3.2

CN06799			23/06/2023 | 00
Change	Modification details ☐:		Date Mod: | IRP
Changes to previous release △: MODIFIED SLOTS		Obtain from:	Substitute: 056557.0.0
Material:		Code:	
Supply state:		Dimensions:	
Thermic treat.:		Hardness(T):	
Surface treat.: Fe/Zn 8÷12 A HP UNI ISO 2081 free Cr VI		Hardness(S):	
Weigth: 0.2 kg	Volume: 24321.29 mm^3		

Approved

DENOMINATION: REGGETTA SOSTEGNO 1 SCIVOLO TUBETTI (MC. DX)

SAVIO	Draw.: Flavio Drigo	Date: 22/06/2023	056557.1.0
	Mod.: Flavio Drigo	Sheet N°: 2/2	
	App.: Stefano Malfante	Scale: 1:1	SUPPORT

Reserved property of SAVIO MACCHINE TESSILI S.p.A. In accordance with the law, the contents of this drawing may not be re-produced or communicated to third parties.