GENERAL TOLERANCES
Angular dimension +-1° - Roundness range of tolerance from IT4 to IT11. Must be contained within half of dimensional tolerance.
MACHINED holes H14 shafts h14 linear values Js14 -- ROUGH holes H16 shafts h16 linear values Js16
SHEETS cutting/laser cutting/punching Js13 holes H13 bending/pressing Js14 -- ALUMINIUM DIE CASTING Savio Norm 4011_1005_00
PLASTIC MATERIALS according to DIN 16901 -- CAST IRON Savio Norm 4011_1003_00
The general tolerances for ROUGH of plastic (DIN 16901) of aluminium (4011_1005_00), of CAST IRON (4011_1003_00), must be intended H for holes, h for shafts, Js for all the other dimensions

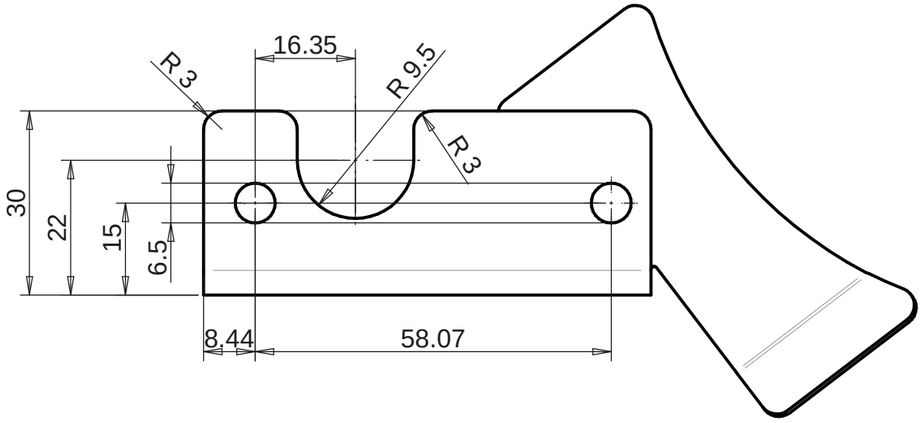

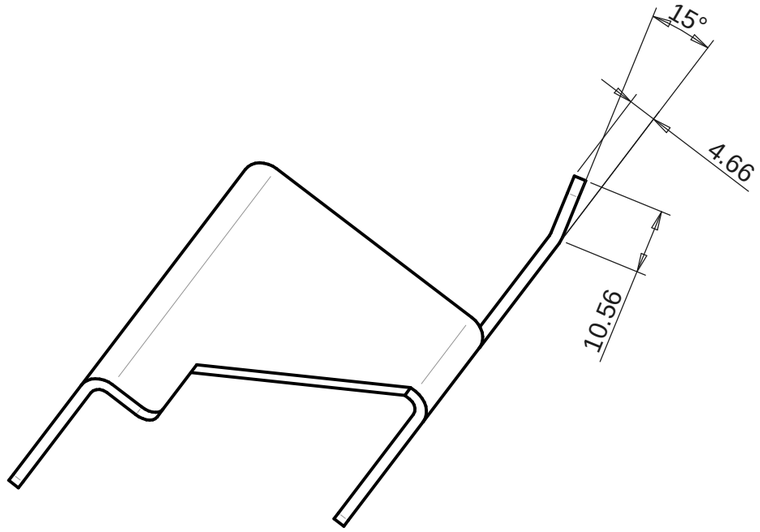

VIEW/Vista A

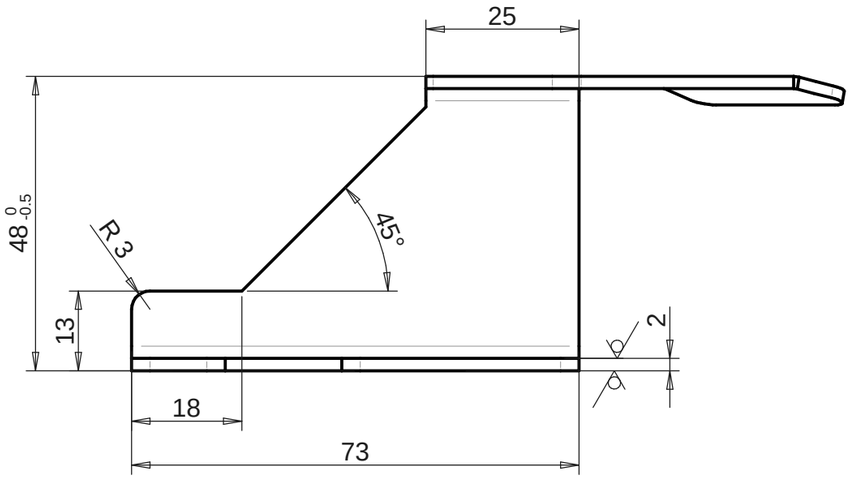

A

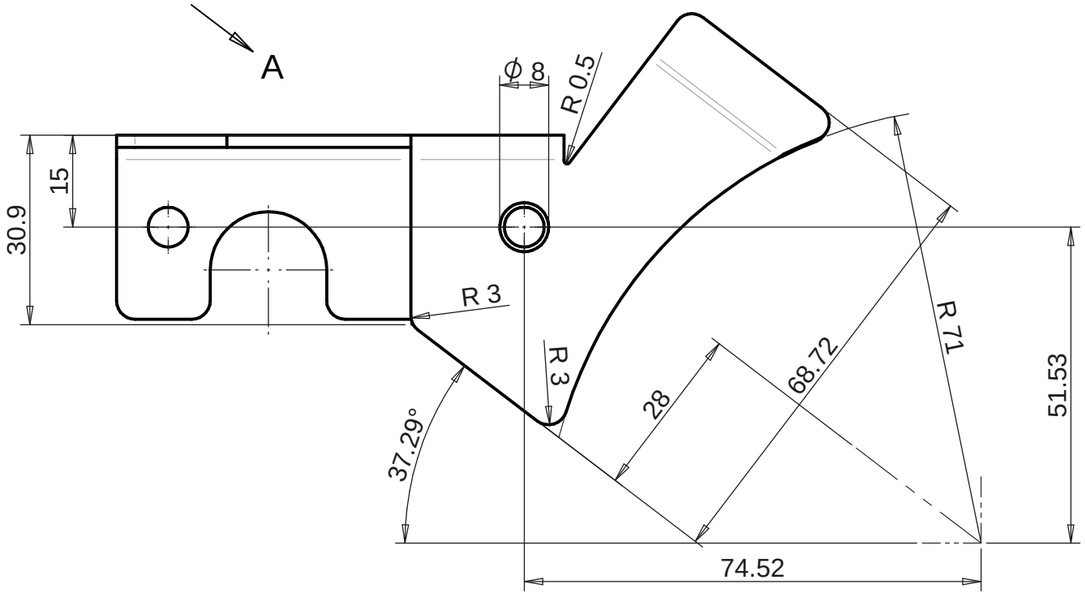

- BAVA MAX 0,04
- MAXIMUM BURR

- RACCORDI NON QUOTATI R3
- FILLETS WITHOUT DIMENSION

- RAGGI INTERNI DI PIEGATURA R2
- INTERNAL BENDING RADIUSES

6.3

CN05436	MOD. TRATTAMENTO SUPERFICIALE DA ZINCATURA A CATAFORESI	15/07/2022	01
Change	Modification details:	Date Mod:	IRP

Approved

Changes to previous release:		Obtain from:	Substitute:
Material:	DC01+A-G UNI EN 10130	Code:	4032_6152_99
Supply state:	+A-G: SURFACE A FINISHING G	Dimensions:	
Thermic treat.:		Hardness(T):	
Surface treat.:	Cataphoresis epoxy graphite black RAL9011 4010-0003-00	Hardness(S):	

DENOMINATION: SUPPORTO PIATTELLO 60 RITORNO TUBETTI SX PROXIMA

SAVIO	Draw.: Marco Pivetta	Date: 15/06/2022	052258.0.0
	Mod. : Marco Pivetta	Sheet N°: 1/1	
	App. : Marco Pivetta	Scale: 1:1	BRACKET

Reserved property of SAVIO MACCHINE TESSILI S.p.A. In accordance with the law, the contents of this drawing may not be re-produced or communicated to third parties.