GENERAL TOLERANCES
Angular dimension +-1° - Roundness range of tolerance from IT4 to IT11. Must be contained within half of dimensional tolerance.
MACHINED holes H14 shafts h14 linear values Js14 -- ROUGH holes H16 shafts h16 linear values Js16
SHEETS cutting/laser cutting/punching Js13 holes H13 bending/pressing Js14 -- ALUMINIUM DIE CASTING Savio Norm 4011_1005_00
PLASTIC MATERIALS according to DIN 16901 -- CAST IRON Savio Norm 4011_1003_00
The general tolerances for ROUGH of plastic (DIN 16901) of aluminium (4011_1005_00), of CAST IRON (4011_1003_00), must be intended H for holes, h for shafts, Js for all the other dimensions

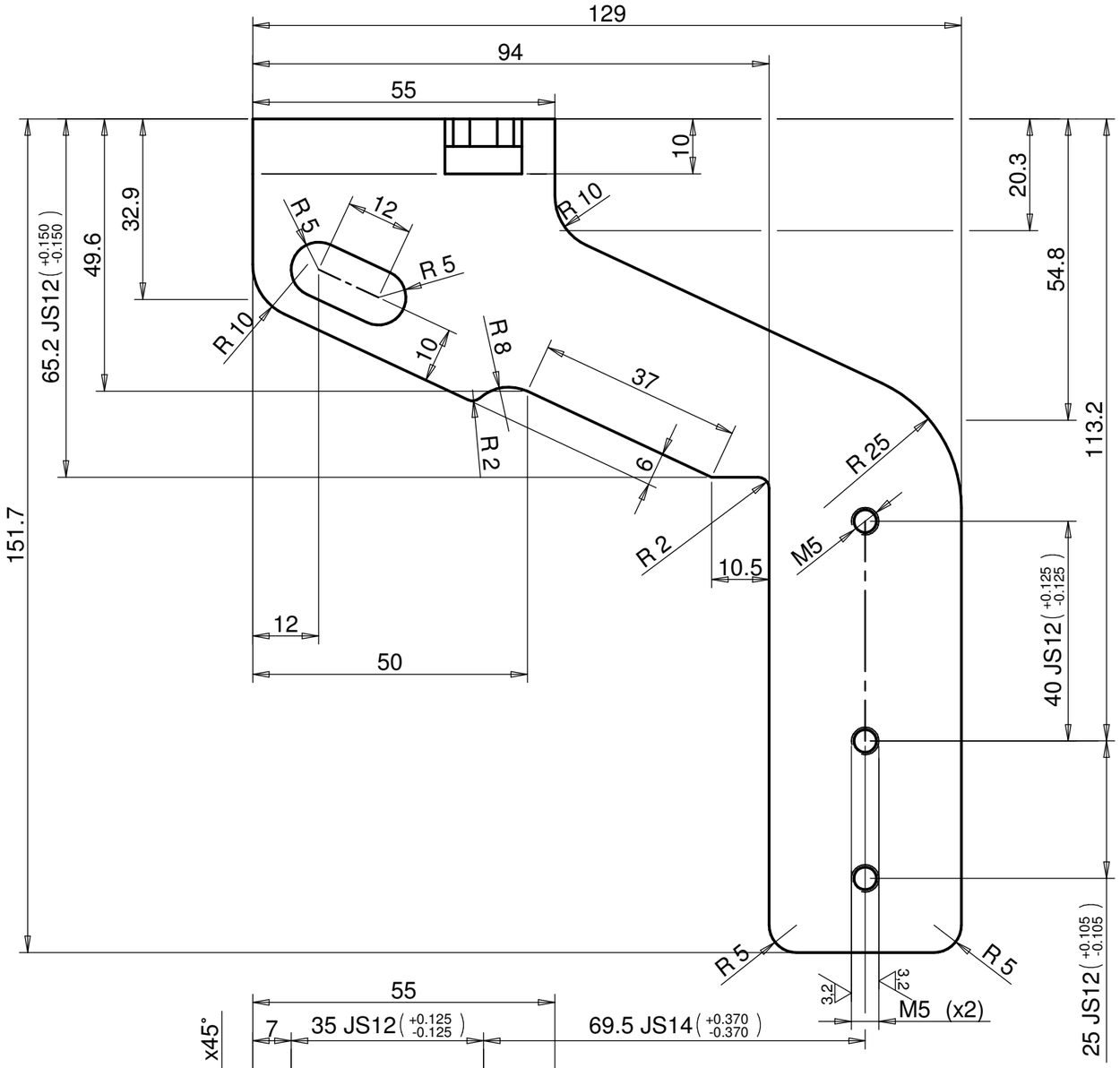

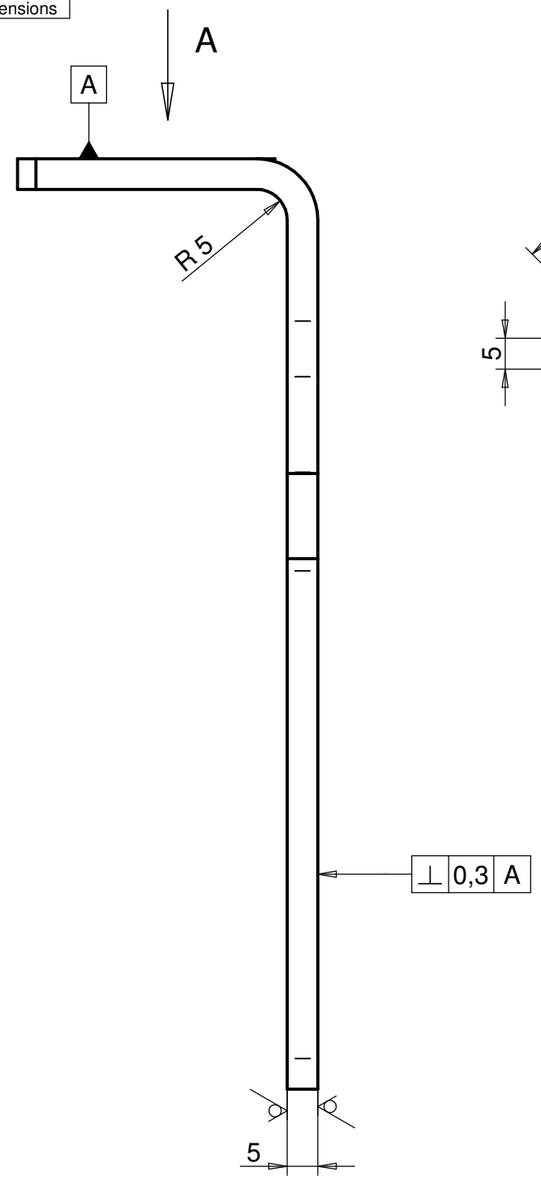

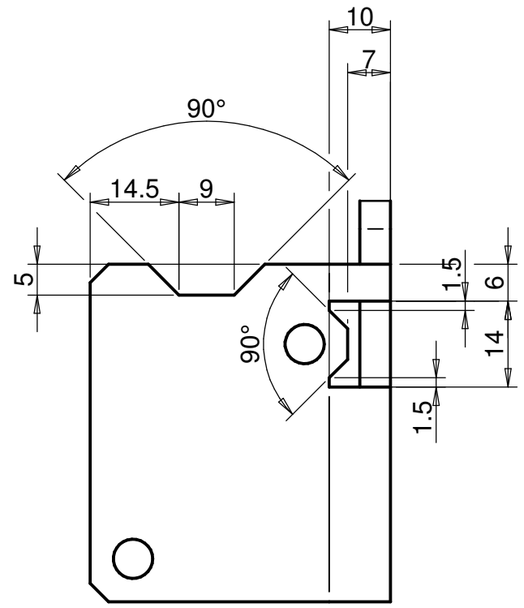

VIEW/Vista A

6,3 (3,2)

BAVA MAX. / MAXIMUN BURR : 0,04 mm

CN05075		20/07/2021	00
Change	Modification details:	Date Mod:	IRP
Changes to previous release: CHANGED HOLES DIM. TO 6,4 mm AND MODIF. (VIEW "A")	Obtain from:	Substitute: 038494.1.0	
Material: S235J2G3 +N UNI EN 10025	Code: 4032_6002_99		
Supply state: +N: NORMALIZING ROLLING	Dimensions:		
Thermic treat.:	Hardness(T):		
Surface treat.: Fe/Zn 8÷12 A HP UNI ISO 2081 free Cr VI	Hardness(S):		

DENOMINATION: SUPPORTO EB20 PER TESTINA PROXIMA

Savio	Draw.: Renzo Del Bianco	Date: 16/07/2021	038494.2.0
	Mod. : Renzo Del Bianco	Sheet N°: 1/1	
	App. : Stefano Malfante	Scale: 1:1	BRACKET

Reserved property of SAVIO MACCHINE TESSILI S.p.A. In accordance with the law, the contents of this drawing may not be re-produced or communicated to third parties.