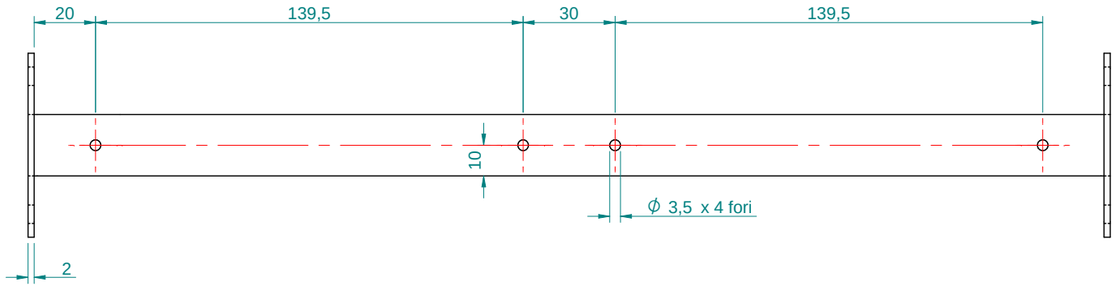

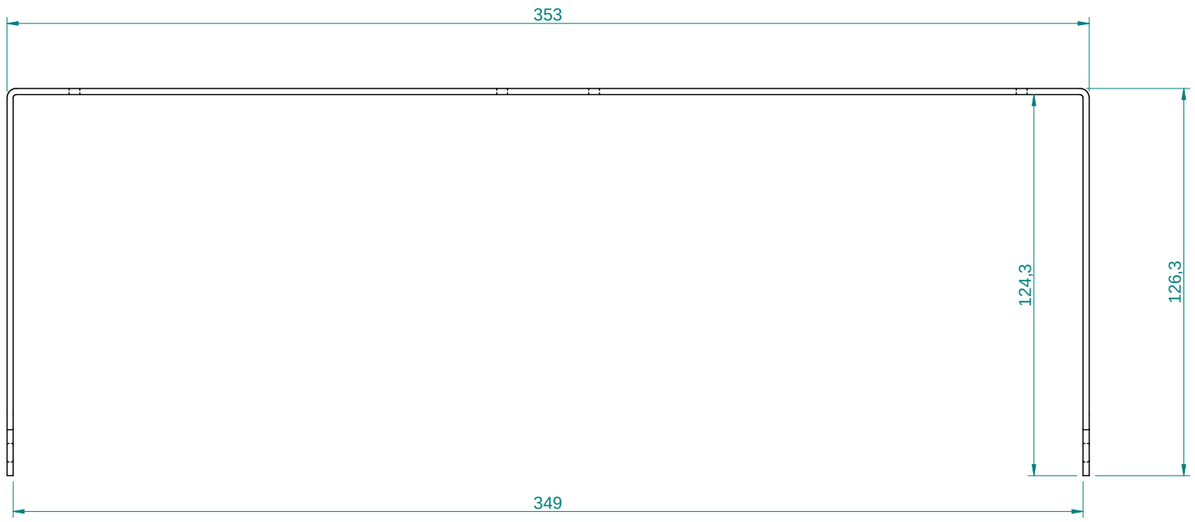

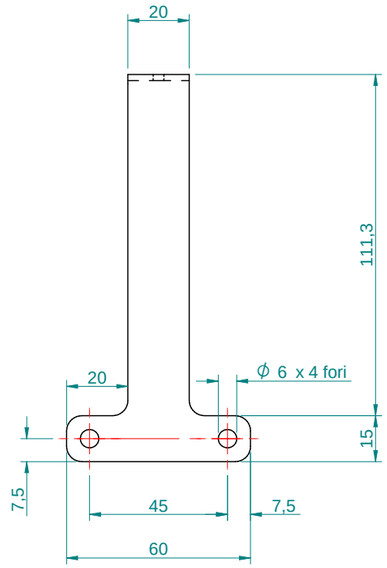

REF.	REF.	REF.
MOD. BY	MOD. BY	MOD. BY
OBJECT	OBJECT	OBJECT
REV. N°	REV. N°	REV. N°
DATE	DATE	DATE

Safety characteristic	Regulation characteristic	Critical characteristic	Mountability characteristic	Quality control	SCALE	MEASURE UNIT	VIEW
Cp/Cpk ≥ 1.66	Cp/Cpk ≥ 1.66	Cp/Cpk ≥ 1	Cp/Cpk ≥ 1	Cp/Cpk ≥ 0.83	1:2	S.I.	
					SIZE: A3	WEIGHT	TOOLING - MOLD
DESCRIPTION: TRESPOLO DIMA RESINATURA TERMOFORMATA SEM-0035					PROJECT	DATE: 14/11/2023	PAGE: 1/1
PART NUMBER: PRE-0158_01				CTO: MB	GENERAL TOLERANCES [mm] (According to UNI EN 20286-1)		
MATERIAL: Fe360				PL	Up to 30.....+/- 0.1		
TREATMENT: CATAFORESI NERO RAL9005				DESIGNER: MC	From 30 to 100.....+/- 0.2		
					From 100 to 300.....+/- 0.3		

MC ELECTRONICS
Fiesso Umbertiano - Rovigo - ITALY
Sistema Qualità Certificato
UNI EN ISO 9001

DISEGNO DI PROPRIETA' DI MC ELETTRONICA. VIETATA LA RIPRODUZIONE, LA COMUNICAZIONI A TERZI E OGNI UTILIZZO CHE NON SIA STATO AUTORIZZATO IN FORMA SCRITTA DA MC ELETTRONICA. IL FORNITORE E' TENUTO A CONTROLLARE LE QUOTE E IL CONTENUTO DI QUESTO DISEGNO E DI COMUNICARE EVENTUALI DISCREPANZE.
Drawing is property of MC Electronics. It's forbidden the reproduction, comunication to third parties and any use that has not been authorized in writing form by Mc Electronics. The supplier is required to check the dimensions and the content of this drawing and to communicate any eventual discrepances.