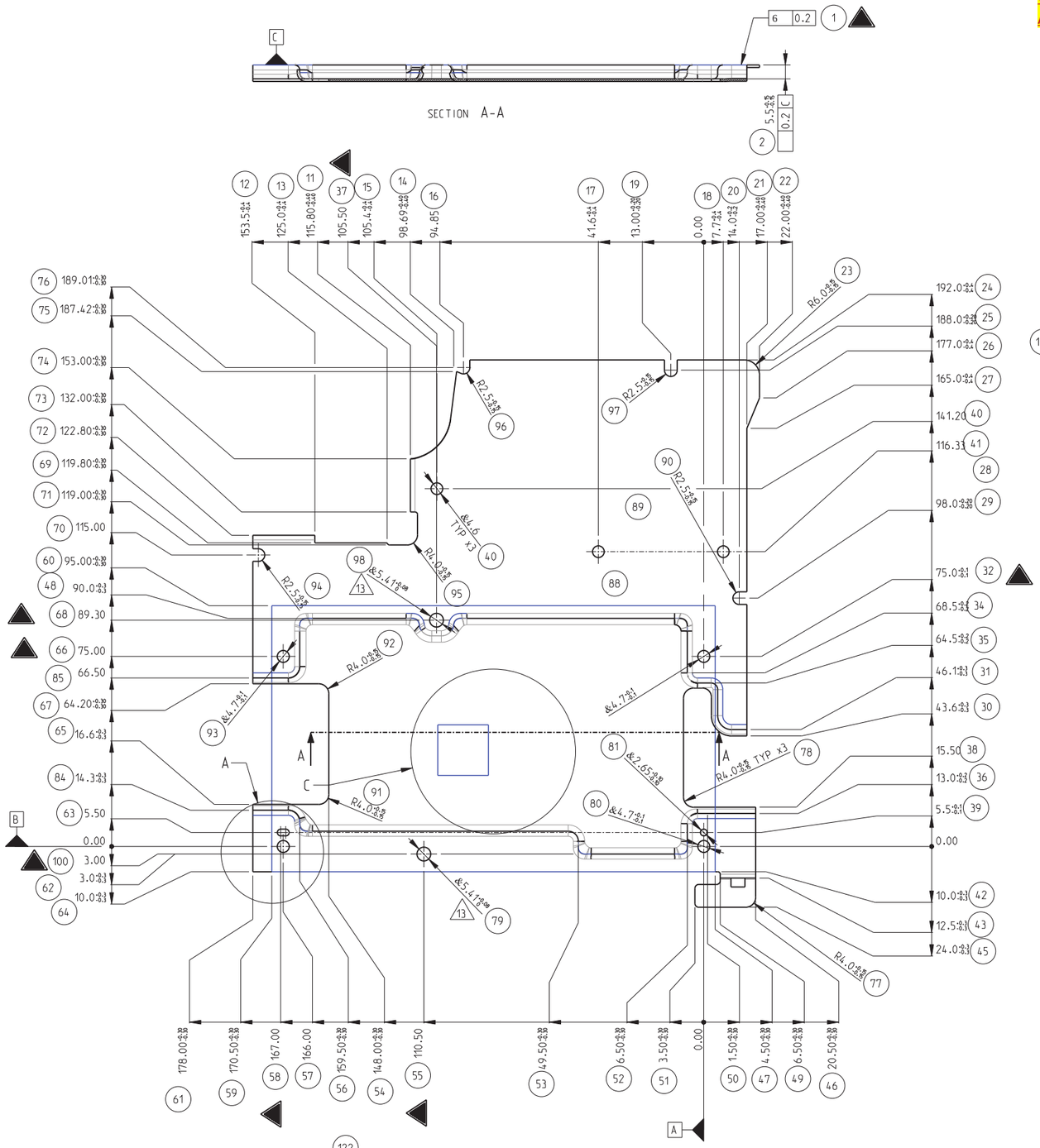

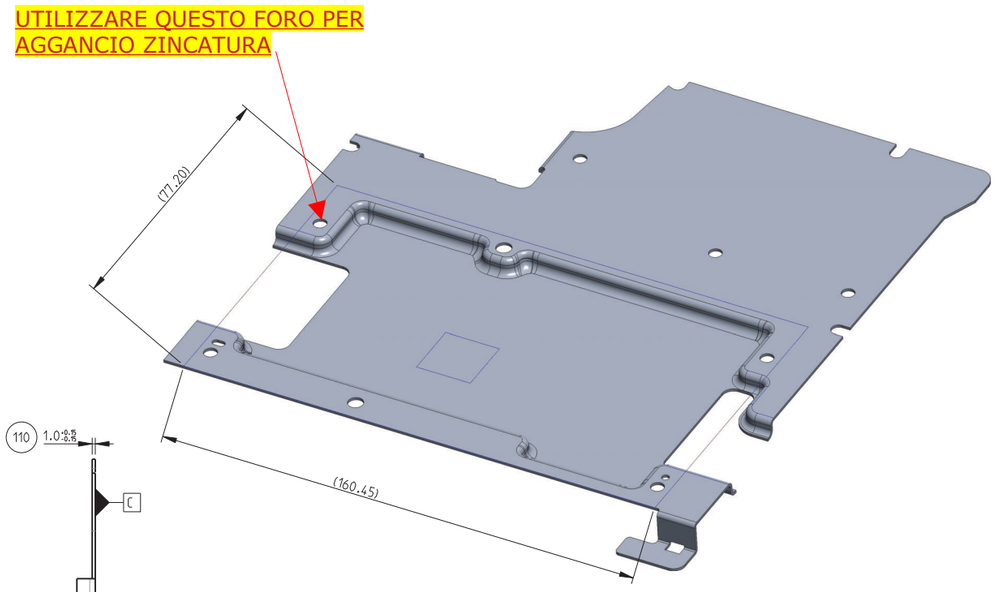

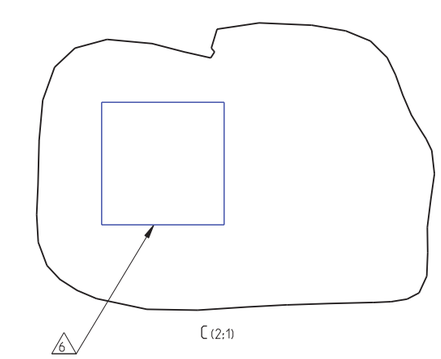

Note:

1) No catting edges admitted on al profiles.

2) No scratch on the surfaces of the part.

3) No oil must be present on all surfaces.

4) The packaging of the parts must be suitable to avoid damage or filth contamination during shipping fase.

5) Laser cutting start and end points must be free from flash or metal tip that could be compromise the cover siling function.

6 Data matrix according to TEXA spec. 10.080.01.12. dimension 14mils

7 -

8) For all missing dimension refere to 3D model

9 Material: ferromagnetic DC04 EN 130

10 Post finish plate galvanized OFL-R645 according standard VW 13750.

11) All banding radius must be cosidered the minimum radius possiblie according to sheetmetale thickness

12) Cleaness requirement according to Texa spec. 10.080.01.13

13 Hole suitable for PEM S-RTM4-1ZI self locking made by Penenginering.

14) For all surfaces without dedicated dimension on the drawing use general tolerance:

+	0.8	C	B	A

DATE MODI.	DOC REV.	MODIFICATION	PDR	AXAPTA	AUTHOR
25-03-2020	A1	First issue	A0	3910853	A.Briccarello
27-04-2020	A2	Geometry profile updated.	A0		A.Briccarello
30-09-2020	A3	Geometry update	A0		A.Briccarello
14-01-2021	B0	Update proto B	B0		R. Coello
27-04-2021	B1	AXAPTA PN update.	B0		R. Coello
02-09-2021	B2	Surface treatment modification.	B0		R. Coello
22-09-2021	C0	Proto C update; cleaniess requirements added.	C0		R. Coello
21-10-2021	C1	PCB profile added	C0		A.Briccarello
30-11-2021	C2	Geometry update	C0		R. Aguerri
05-01-2022	C3	Traceability specification added.	C0		R. Coello
11-01-2022	C4	Geometry change	C0		A.Briccarello

APPROVED
UNICKA
11/03/2022

Tolerance Angular toll. 0.3 Linear tolerance 0.0 0.1 linear tolerance 0.00 0.05 linear tolerance 0.000 0.005	Legal characteristics R Safety characteristics D Special characteristics ▲	Drawn by A.Briccarello Checked by A.Briccarello Approved by -	
CAD DRAWING NO HAND CHANGE ALLOWED	Prototype NO	Date 2020-03-25	TEXA
Material See note 9		Scale 1:1	
Surface finish treatment See note 10		Sheet 1 of 1	
Heat treatment -		Format A1	
Raw material PN See note 8	Customer PN - / Made in Italy	Team Center Part Number TD001214_01	
Title LAMIERA APPOGGIO LOGICA MPIL		Drawing number TD001214_D	
		AXAPTA Part Number 3910853	

CONFIDENTIAL: All proprietary rights reserved by TEXA S.p.A.. No parts of this document may be reproduced or distributed in any form or by any means without prior written permission of Texa E-Powertrain. Any infringement will be legally pursued.