GENERAL TOLERANCES
Angular dimension +-1° - Roundness range of tolerance from IT4 to IT11. Must be contained within half of dimensional tolerance.
MACHINED holes H14 shafts h14 linear values Js14 -- ROUGH holes H16 shafts h16 linear values Js16
SHEETS cutting/laser cutting/punching Js13 holes H13 bending/pressing Js14 -- ALUMINIUM DIE CASTING Savio Norm 4011_1005_00
PLASTIC MATERIALS according to DIN 16901 -- CAST IRON Savio Norm 4011_1003_00
The general tolerances for ROUGH of plastic (DIN 16901) of aluminium (4011_1005_00), of CAST IRON (4011_1003_00), must be intended H for holes, h for shafts, Js for all the other dimensions

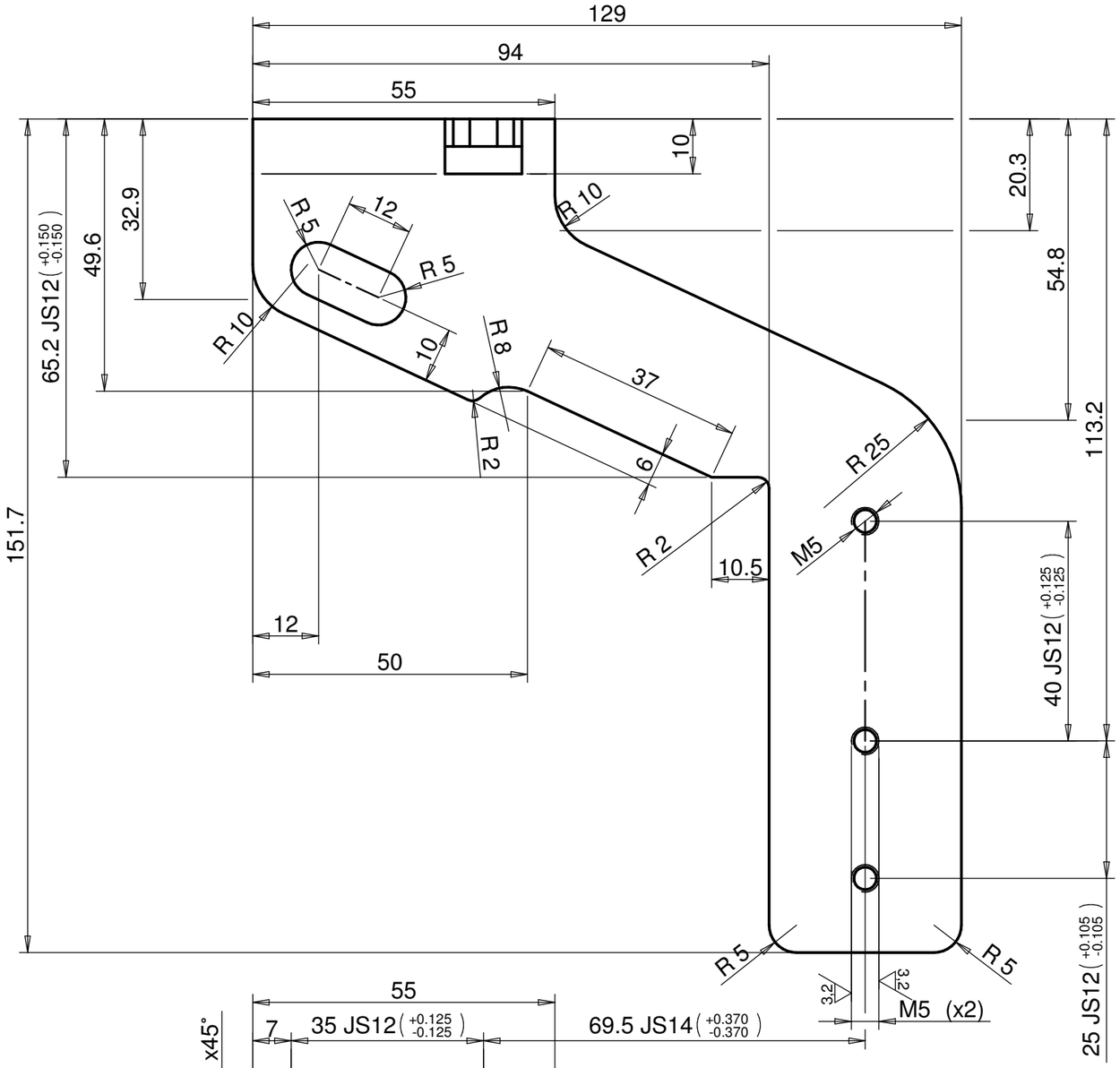

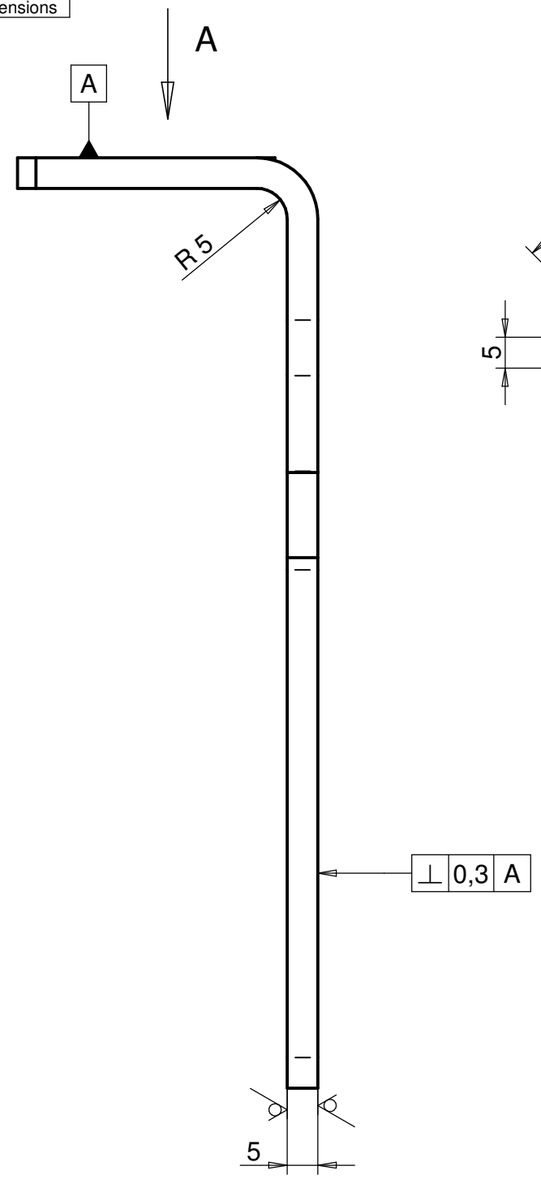

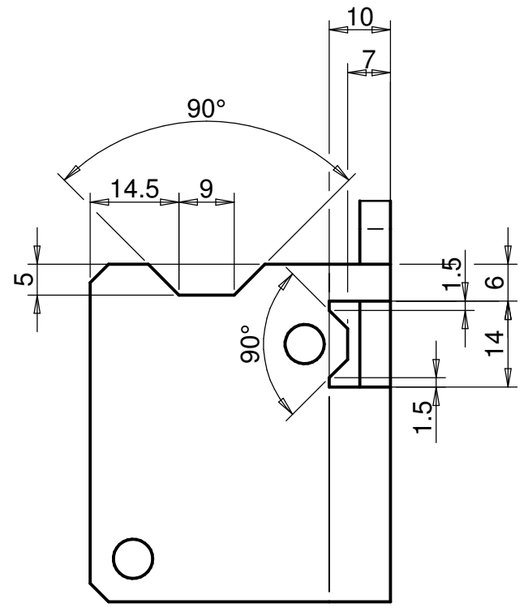

VIEW/Vista A

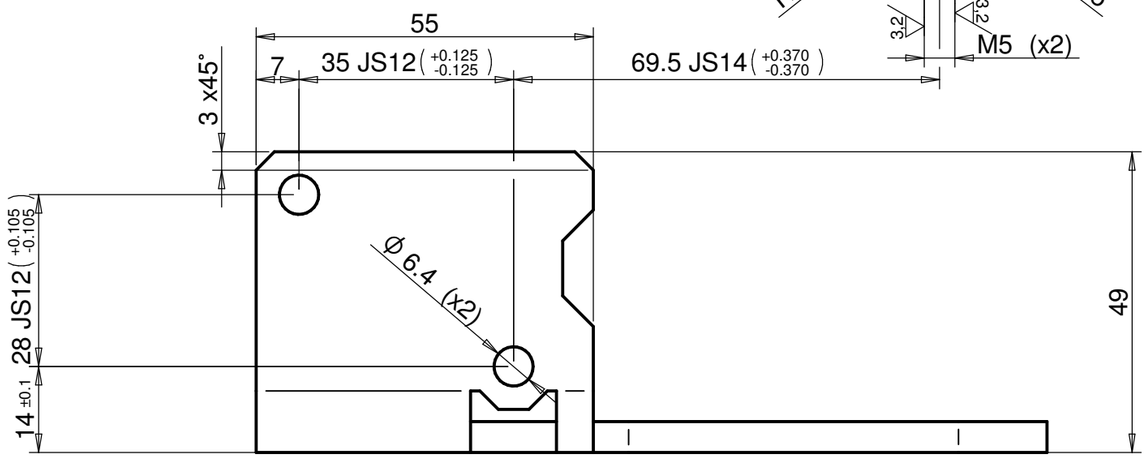

6,3 (3,2)

BAVA MAX. / MAXIMUN BURR : 0,04 mm

CN05075		20/07/2021	00
Change	Modification details:	Date Mod:	IRP
Changes to previous release: CHANGED HOLES DIM. TO 6.4 mm AND MODIF. (VIEW "A")		Obtain from:	Substitute: 038494.1.0
Material: S235J2G3 +N UNI EN 10025		Code: 4032_6002_99	
Supply state: +N: NORMALIZING ROLLING		Dimensions:	
Thermic treat.:		Hardness(T):	
Surface treat.: Fe/Zn 8÷12 A HP UNI ISO 2081 free Cr VI		Hardness(S):	

Approved

DENOMINATION: SUPPORTO EB20 PER TESTINA PROXIMA

Ros s.r.l.
Via Crosera, 42 - Zona Industriale
33082 AZZANO DECIMO (PN)
Tel. 0434 633318 r.a. - Fax 0434 640639
C.F. e P.IVA 01278530934

Draw.: Renzo Del Bianco	Date: 16/07/2021	038494.2.0	
Mod.: Renzo Del Bianco	Sheet N°: 1/1		
App.: Stefano Malfante	Scale: 1:1	BRACKET	

Reserved property of In accordance with the law, the contents of this drawing may not be re-produced or communicated to third parties.