719-32.000.02

Ra 2,5 (√)

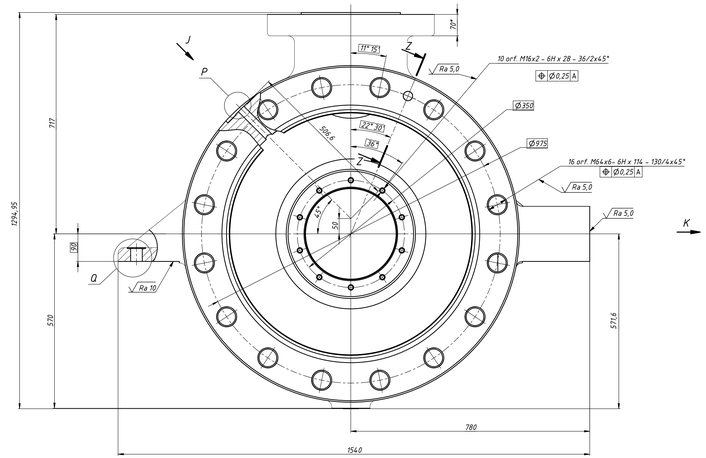

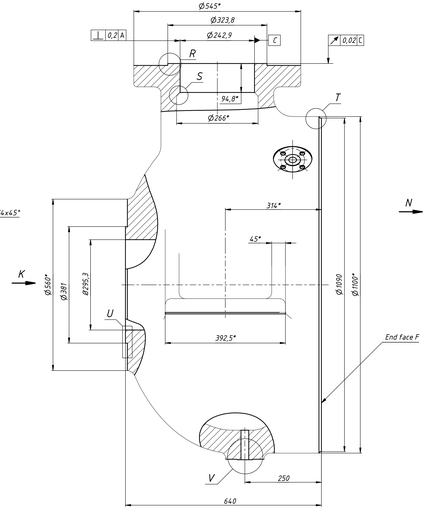

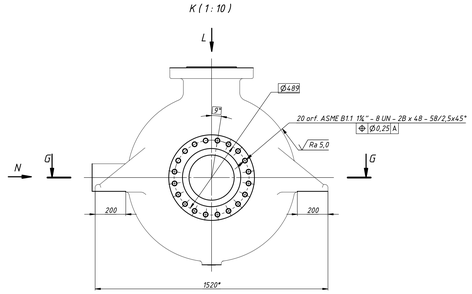

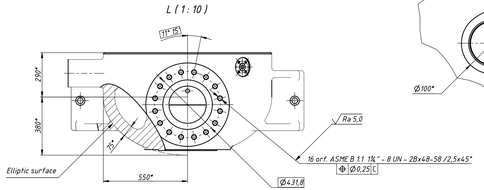

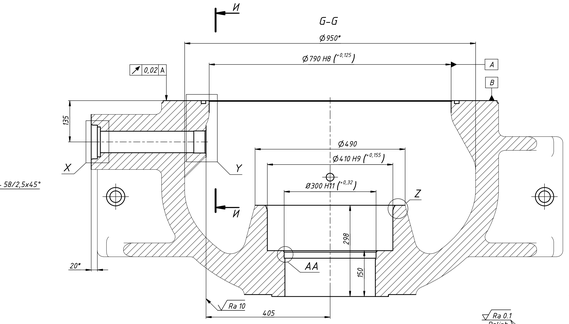

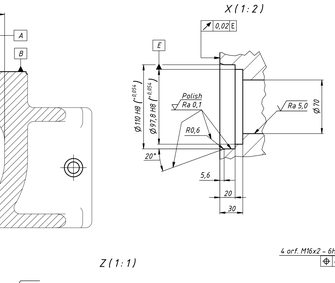

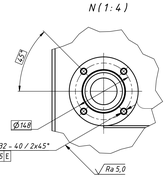

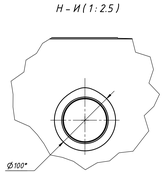

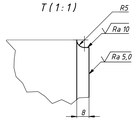

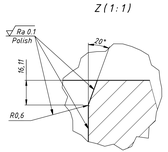

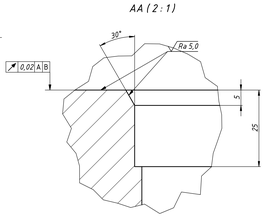

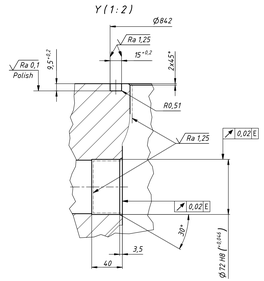

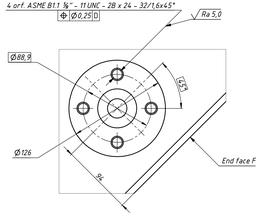

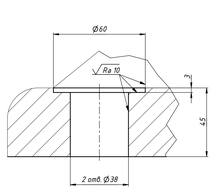

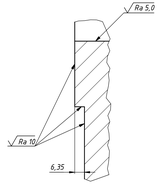

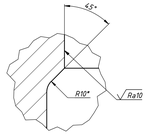

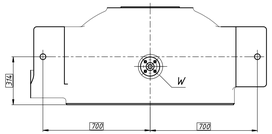

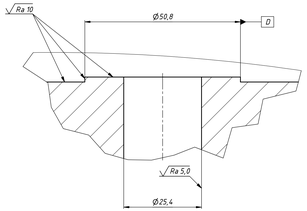

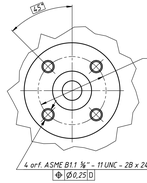

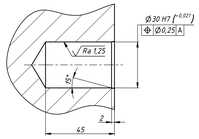

1. * Dimensions for reference.
2. ** Dimensions are provided by the tool.
3. Unspecified tolerances: H14, h14, ±t₂/2.
4. Liquid penetrant inspection. Severity levels SPI/LP1 according to ISO 4987. Testing products P-II, R-A/C, D-b/d according ISO 9452-1.
5. After machining, passivation of a casting is to be as per ASTM A967.
6. The casing is to be hydrotest under pressure 117 bar according to NGWK-TO-0400-VOQC-PODS-0138.
7. Helium leak detection under pressure 78 bar according to NGWK-TO-0400-VOQC-REDN-0026.

					719-32.000.02				
Rev	Sheet	Doc №	Sign	Date	Turbine casing	Size	Weigt	Scale	
Develop	Halterskiy					M	1963	1:5	
Check	Shertsakov								
Contr.	Mochan					Sheet	Sh of sh	1	
CUD	Plakhotnik				Billet 739-32.000.01	Pr JSC "Turbogaz"			
N contr.									
Approv.	Vyachenko								
	Revision 2					Format A2x4			

Sign and date | Inv. № dupl. | Inv. № orig. | Sign and date | Inv. № of sh.