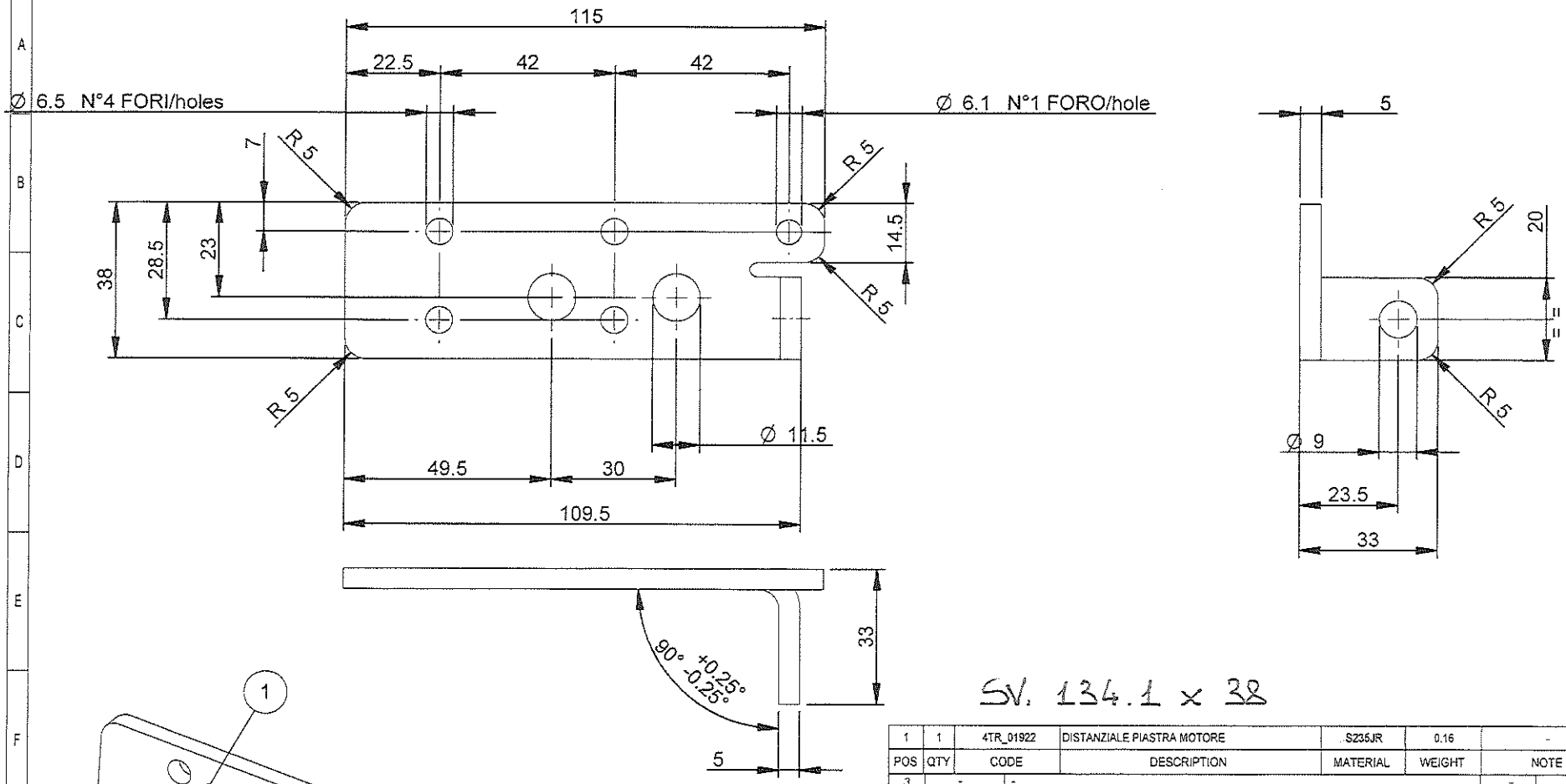

SV. 134.1 x 38

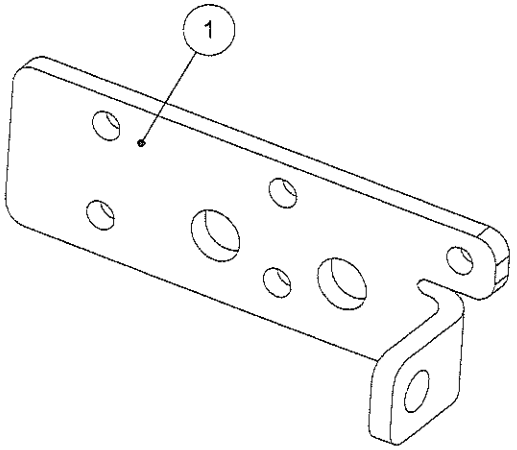

CATAFORESI NERA
Black Cataphoresis

POS	QTY	CODE	DESCRIPTION	MATERIAL	WEIGHT	NOTE	LENGTH
1	1	4TR_01922	DISTANZIALE PIASTRA MOTORE	S235JR	0.16	-	0.0

REV	DATE	DESCRIPTION	CDM	DRAWN BY	APPROVED BY
3	-	-	-	-	-
2	09/05/2016	Aggiornato tolleranza su lembo piegato	-		
1	24/11/2015	Eliminato foro per fissaggio e aggiornato geometria	-		

REVISIONS LIST

HEAT / SURFACE TREATMENT: CATAFORESI NERA

ROUGHNESS Ra [um]:

NOT SHOWN CHAMFERS / RADIUS: Sm.0.5x45° - R=0.5mm

DRAWN BY / APPROVED BY / DATA / SIGN.

DIMENSIONS WITHOUT TOLERANCE INDICATION: Grado di precisione => MEDIO UNI EN 22768-1

SCALE: 1:1

DESCRIPTION: DISTANZIALE PIASTRA MOTORE

FORMAT

TOTAL WEIGHT [daN]: 0.16

CODE: 4TR_01922

REVISION: 02

SHEET: 1 of 1

Therefore, the reproduction or transmission to any third party is forbidden. Any infringement will be punished according to the laws in force.