GENERAL TOLERANCES
Angular dimension +-1° - Roundness range of tolerance from IT4 to IT11. Must be contained within half of dimensional tolerance.
MACHINED holes H14 shafts h14 linear values Js14 -- ROUGH holes H16 shafts h16 linear values Js16
SHEETS cutting/laser cutting/punching Js13 holes H13 bending/pressing Js14 -- ALUMINIUM DIE CASTING Savio Norm 4011_1005_00
PLASTIC MATERIALS according to DIN 16901 -- CAST IRON Savio Norm 4011_1003_00
The general tolerances for ROUGH of plastic (DIN 16901) of aluminium (4011_1005_00), of CAST IRON (4011_1003_00), must be intended H for holes, h for shafts, Js for all the other dimensions

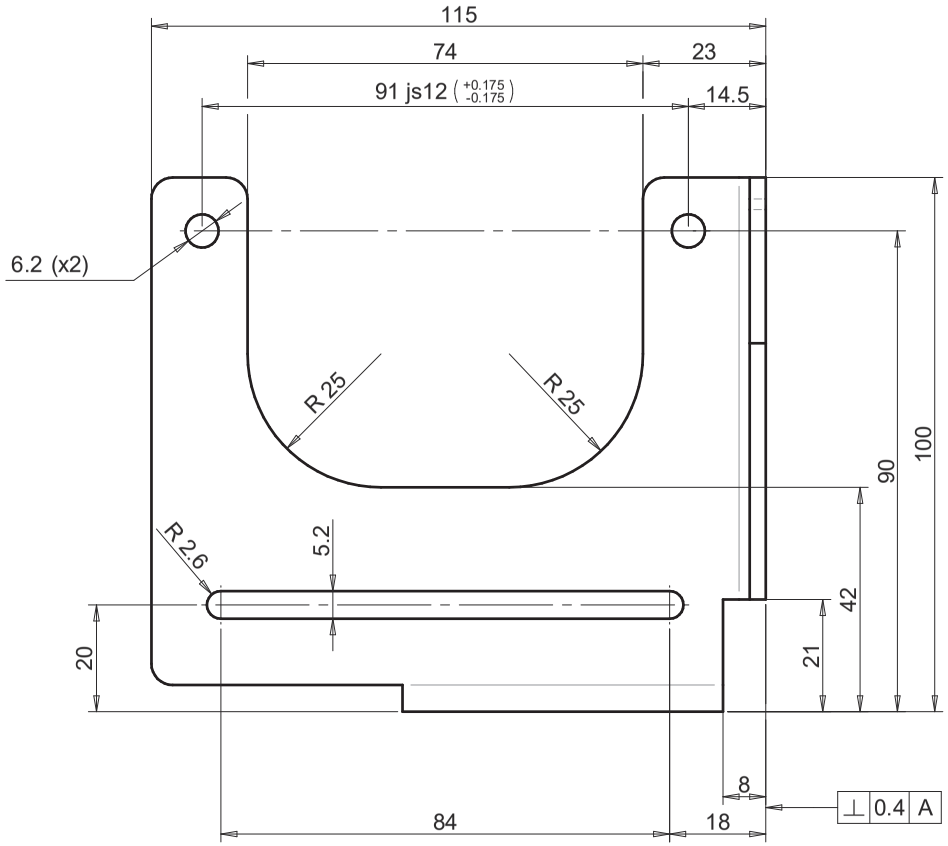

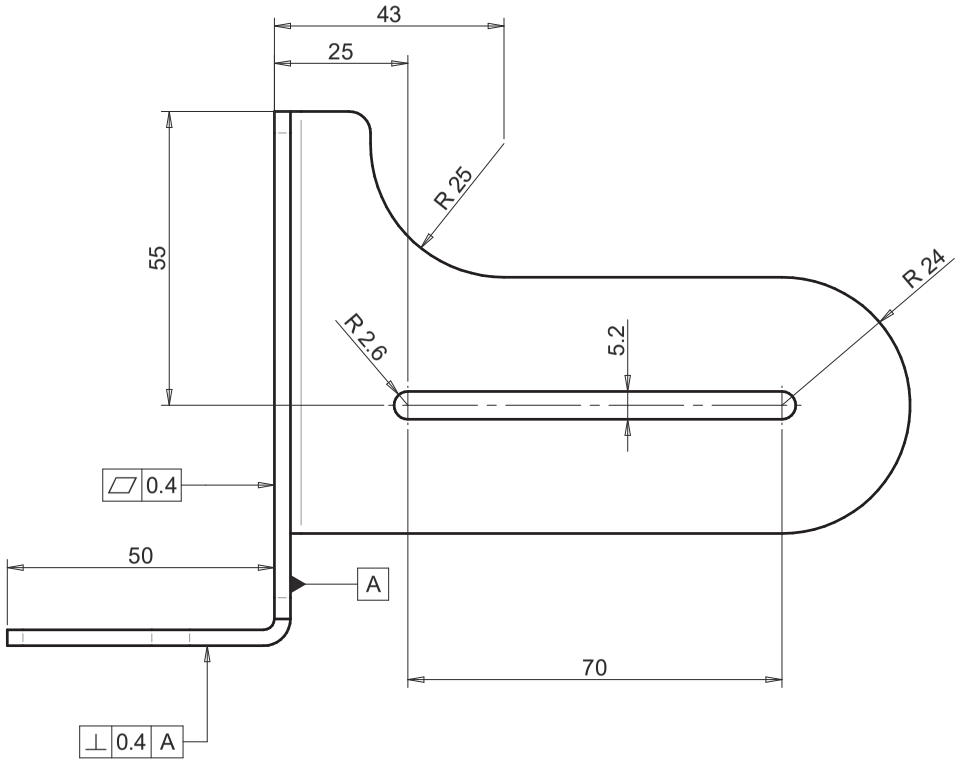

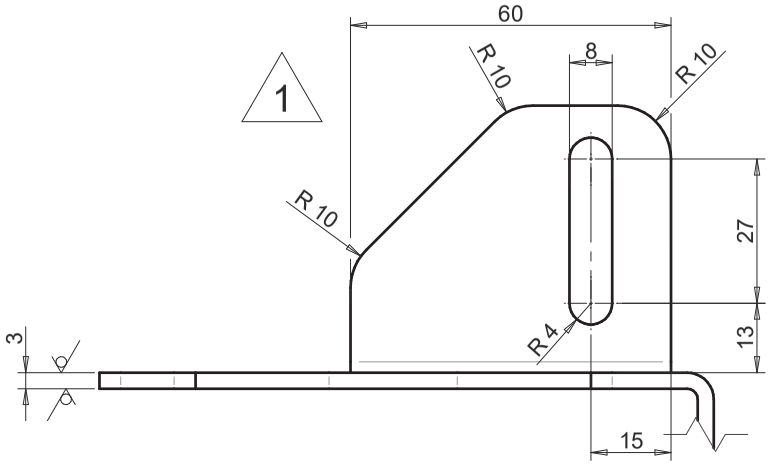

- BAVA MAX 0,04
- MAXIMUM BURR

- RAGGI INTERNI DI PIEGA R=2
- INTERNAL BENDING RADIUSES

- RACCORDI NON QUOTATI R4
- FILLETS WITHOUT DIMENSION

6.3

CN06795		16/06/2023	00
Change	Modification details ☐:	Date Mod:	IRP
Changes to previous release △: ADDED FLAP AND REMOVED M6 HOLES	Obtain from:	Substitute: 055709.0.0	
Material:	Code: 4032_6190_99		
Supply state: +2B: COLD ROLLED.HEAT TREATED. PICKLED. SKIN PASSED	Dimensions:		
Thermic treat.:	Hardness(T):		
Surface treat.: Fe/Zn 8÷12 A HP UNI ISO 2081 free Cr VI	Hardness(S):		
Weigth: 0.3 kg	Volume: 42364.42 mm^3		

DENOMINATION: SUPPORTO GRUPPO FORBICI RICERCA MC. SX

Draw.: Enrico Gaiotto	Date: 31/05/2023	055709.1.0	
Mod.: Enrico Gaiotto	Sheet N°: 1/1		
App.: Stefano Malfante	Scale: 1:1	BRACKET	

Reserved property of SAVIO MACCHINE TESSILI S.p.A. In accordance with the law, the contents of this drawing may not be re-produced or communicated to third parties.