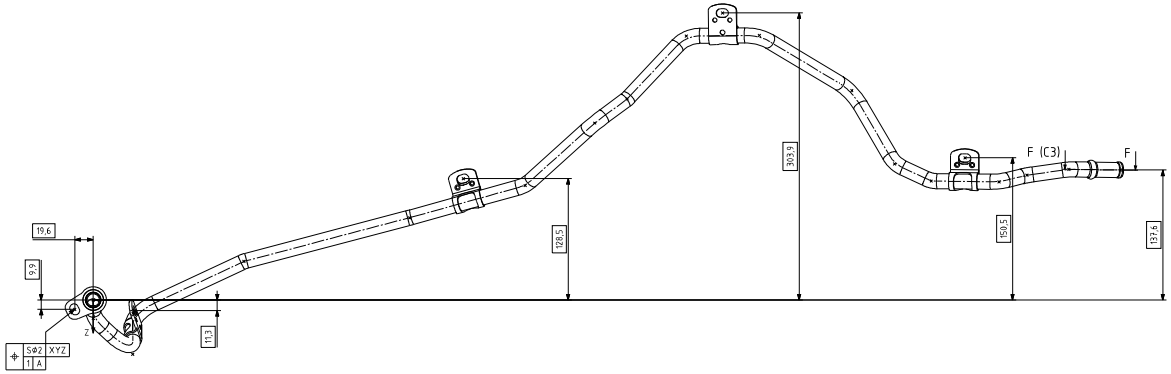

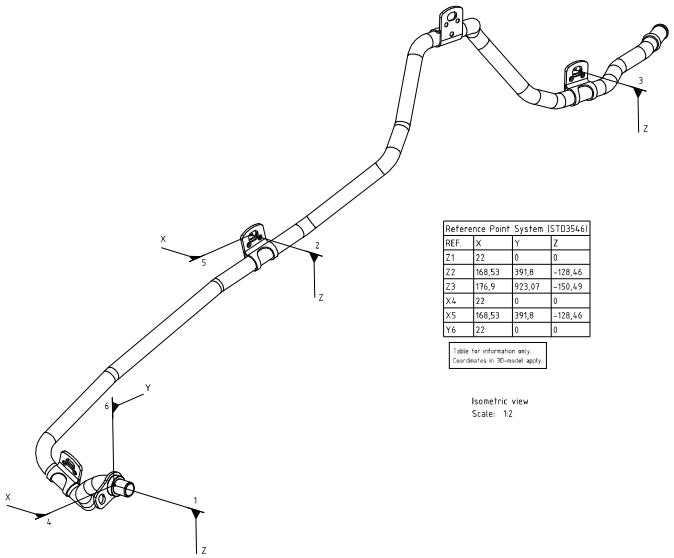

Reference Point System (STD35461)			
REF.	X	Y	Z
Z1	22	0	0
Z2	168,53	391,8	-128,46
Z3	176,9	923,07	-150,49
X4	22	0	0
X5	168,53	391,8	-128,46
Y6	22	0	0

Table for information only
Coordinates in 3D-model apply

Isometric view
Scale: 1:2

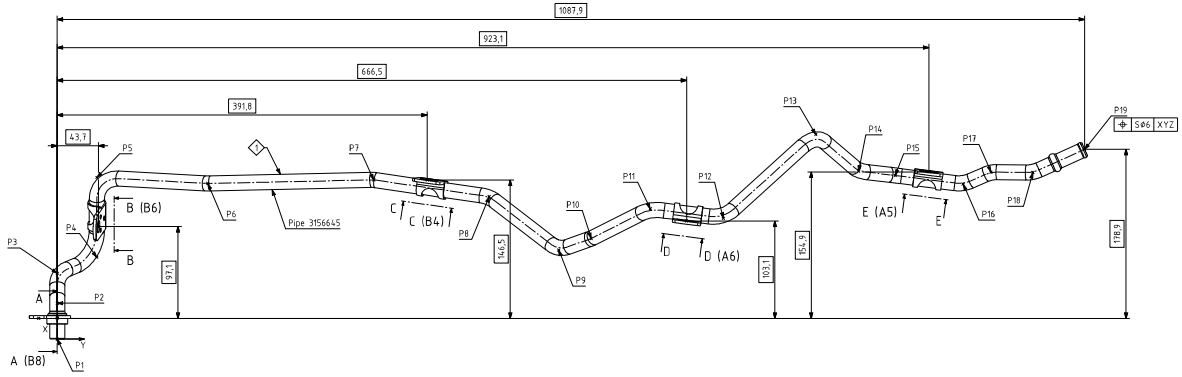

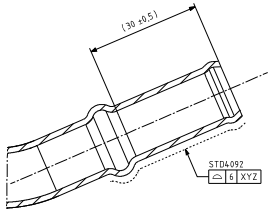

F-F (F4)
Scale: 2:1

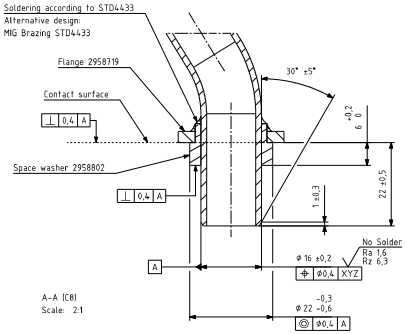

A-A (C8)
Scale: 2:1

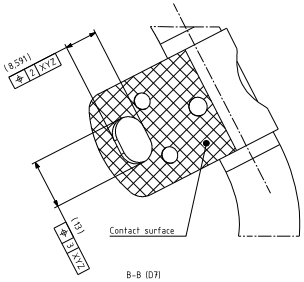

B-B (D7)
Scale: 2:1

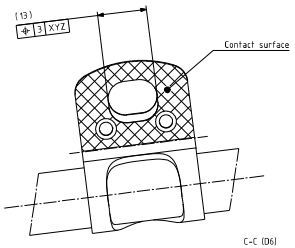

C-C (D6)
Scale: 2:1

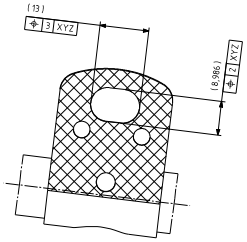

D-D (D5)
Scale: 2:1

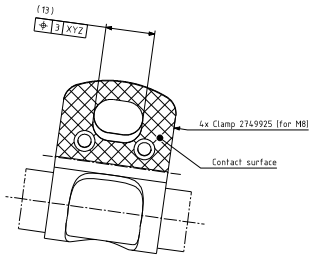

E-E (D5)
Scale: 2:1

Dimensions of bent pipe	STD3875		
Unless otherwise stated the following applies Profile tolerance of the pipe centre ⌓ ⌀6 related to specified basic X, Y, Z and R dimensions Bending radius R the center line of the pipe R 16			
Coordinate point	X coordinate	Y coordinate	Z coordinate
P1	0	0	0
P2	38,1	0	0
P3	69,7	0	19,41
P4	86,68	41,87	57,52
P5	171,14	42,05	14,02
P6	164,8	159,51	-40,83
P7	168,62	335,77	-87,12
P8	150,85	457,51	-121,09
P9	94,26	530,93	-187,27
P10	106,52	565,44	-212,79
P11	138,05	628,03	-219,48
P12	128,01	705,38	-280,11
P13	216,64	803,26	-221,56
P14	177,82	848,48	-144,11
P15	173,32	887,41	-125,86
P16	164,06	959,26	-125,1
P17	176,86	988,79	-132,13
P18	176,35	1033,14	-138,34
P19	200,93	1087,86	-137,58

Table for information only
Coordinates in 3D-model apply

Valid for inner surface of the pipe

Applies to contact surface ⌓ 3 XYZ

Position of coordinates STD4463
Geometrical tolerances STD3753

Geometrical tolerances
General filter specification
unless otherwise stated
STD SS-EN ISO 1101 TF: S2,5-+50-

Surface treatment pipe: STD4111-D2-PS Only Electro Dip Coating
Colour requirement: Black
Pipe blank/dimension: Φ16x1.5
Pipe material: Steel. STD4169-1C2K. SS-EN 10305-4.

Unless otherwise stated the following applies
ISO metric screw threads ISO 724 — Gap Requirement STD4451
Tolerance class ISO 965-1 6H 6g — Marking STD1132 305-A
Surface Texture — Gate Tolerances
Cleanliness requirement — Surface Treatment: See note
Arc. to Scania STD 4540
Material — Part: See note — Start / Dimension: See note
Unless otherwise stated, functional surface is inside welded area
Mass / Weight: See note
AREA: [GA I (1100g/m) / (6,2mg) / (H) Escalation: I S I]
Graphics / References: See note
Marking STD119 — Method MA2 — Height 4-10
Trademark/type: 3156643
Manufacturer

Design	Zone	ECO Number	Change Description	Ch	Date	Sign

Drawing methods STD12 — Tolerancing STD1062 — Prohibited and restricted substances 47000
Projection Method — Scale 1:2 — Approved ECO Number 752991 — Classification STD1344 — Required Parts STD1111 — <C>:0 <M>:0 <L>:0

Designed: Pettersson Marcus — Design Checker (SIGNATURE) — STD ch (SIGNATURE) — Approved — SCANIA

Description: Coolant pipe dia 16

Status: PR — Document ID: 3156643 — Rev: 1

Lifecycle Status: RELEASED — Date: 2023-06-12 — Sheet: 1 (1)

The copyright and ownership of this drawing including associated computer data and add remarks rests, they must not be copied and/or brought to the knowledge of any third party without our clear permission. © SCANIA, Sweden

3156643

30 Dec 3156643-1 1
20 Dec 3156643-1 1 1

SVT186-03

A0