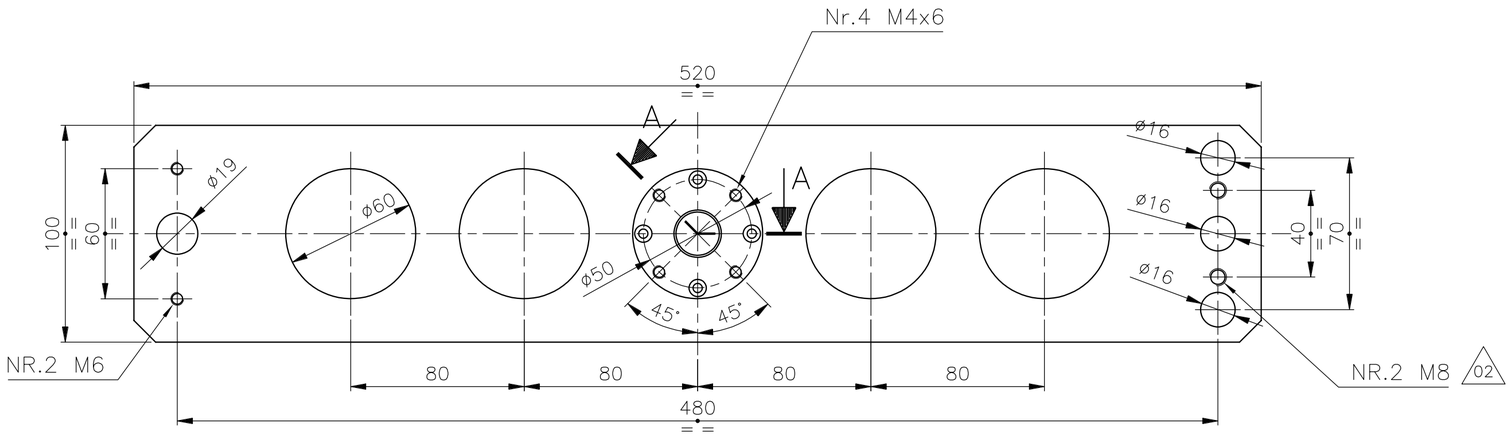


SEZ. SECT. A–A

SCALA SCALE 1:1

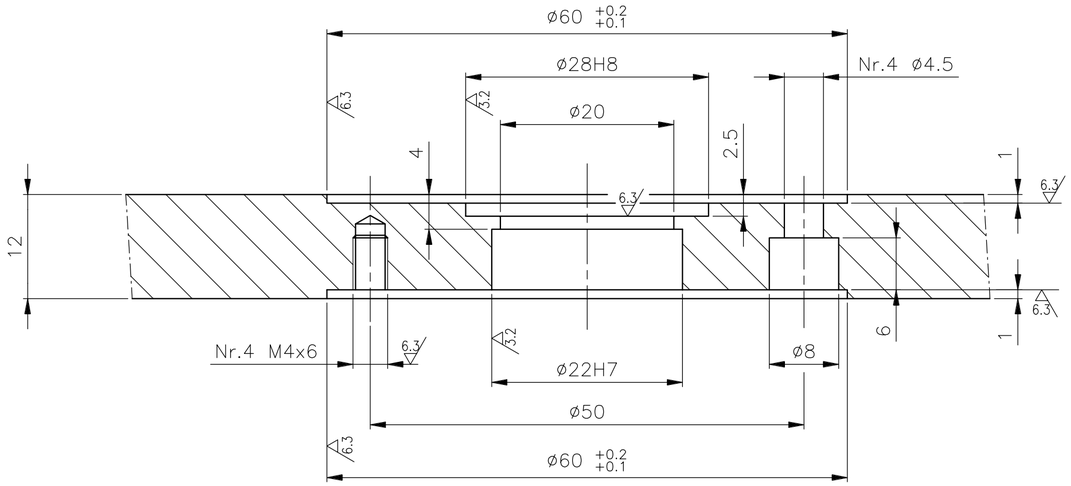


_ ESEGUIRE NICHELATURA UNIFORME SU TUTTA LA SUPERFICE

_ UNIFORM NICHELING ON ALL SURFACES REQUIRED

_ ESEGUIRE MICROSABBIATURA UNIFORME SU TUTTE LE SUPERFICI 1X45°

_ UNIFORM SANDBLASTING ON ALL SURFACES REQUIRED

12.5 ( 6.3 3.2 )

SMUSSO SPIGOLI NON QUOTATI= UNQUOTED BEVELS...

RAGGI NON QUOTATI R = 1 UNQUOTED RADII...

SCOSTAMENTI PER QUOTE SENZA INDICAZIONE DI TOLLERANZA
DEVIATIONS FOR DIMENSIONS WITHOUT TOLERANCE

CLASSE DI TOLLERANZA/TOLERANCE CLASS
FINE/FINE UNI ISO 2768 – F

| | | | | | | | | |
|---|---|---|---|---|---|---|---|---|
| OLTRE OVER | 0.5 | 3 | 6 | 30 | 120 | 400 | 1000 | 2000 |
| FINO A UP TO | 3 | 6 | 30 | 120 | 400 | 1000 | 2000 | 4000 |
| SCOST. DEV. | ±0.05 | | ±0.1 | ±0.15 | ±0.2 | ±0.3 | ±0.5 | – |

| Rev. | Date(dd-mm-yyyy) | Revisions description | Drawn | Checked | Approved |
|---|---|---|---|---|---|
| 02 | 09-08-2019 | MOD FORI<br>HOLES MOD 02 | BaselloE | BaselloE | SaccomaniF |
| 01 | 30-05-2019 | ADATT PER DISTANZIALI<br>SPACERS ADAPT | BaselloE | BaselloE | SaccomaniF |
| 00 | 13-04-2017 | EMISSIONE<br>ISSUE | BaselloE | BaselloE | LugnanA |

DANIELI AUTOMATION

Danieli item (TPC)

Contractual item

Obtained from

Replaces

Shop drw number | Rev.

Job No. | No. of parts | Progr. No.

Pattern DB. | Pattern code | Unit M.P208.DS | Item 301

Material S275JR EN10025 | Heat treatment

Classification / symbol | Mass ( Kg ) 4 | J=m.r2 ( Kg m2)

Title

PIASTRA DI BASE

PLATE

Scale 1:1

Format A2

DANIELI drw number M.P208.002 | Revision 02

Nr. of sheets 1

Sheet / Follow 001 / –

According to law DANIELI AUTOMATION Spa considers this document to be a company secret and therefore prohibits any person to reproduce or disclose it or make it known in whole or in part to other parties or to competitors without specific written authorization of DANIELI AUTOMATION SpA Management

File number MP208002.dwg

CERTIFICATION OF THE QUALITY SYSTEM OF THE COMPANIES
UNI EN 29001 ISO 9001
Member of
Certified by OneDoc M.P208.002 Rev.02-EI 1/1