GENERAL TOLERANCES
Angular dimension +-1° - Roundness range of tolerance from IT4 to IT11. Must be contained within half of dimensional tolerance.
MACHINED holes H14 shafts h14 linear values Js14 -- ROUGH holes H16 shafts h16 linear values Js16
SHEETS cutting/laser cutting/punching Js13 holes H13 bending/pressing Js14 -- ALUMINIUM DIE CASTING Savio Norm 4011_1005_00
PLASTIC MATERIALS according to DIN 16901 -- CAST IRON Savio Norm 4011_1003_00
The general tolerances for ROUGH of plastic (DIN 16901) of aluminium (4011_1005_00), of CAST IRON (4011_1003_00), must be intended H for holes, h for shafts, Js for all the other dimensions

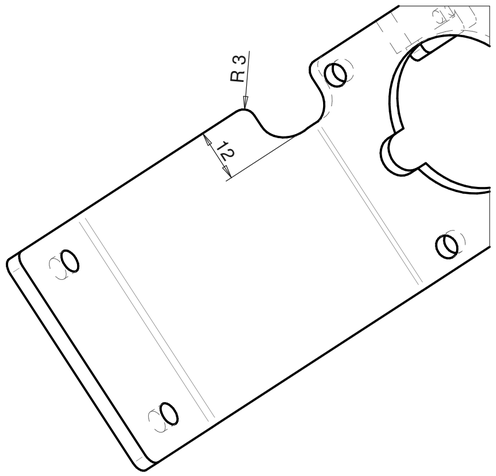

VIEW/Vista B

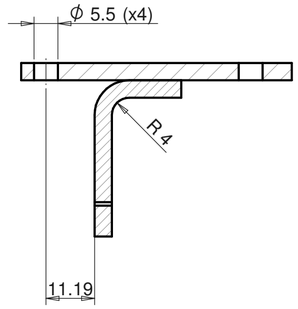

SECT./Sez. A-A

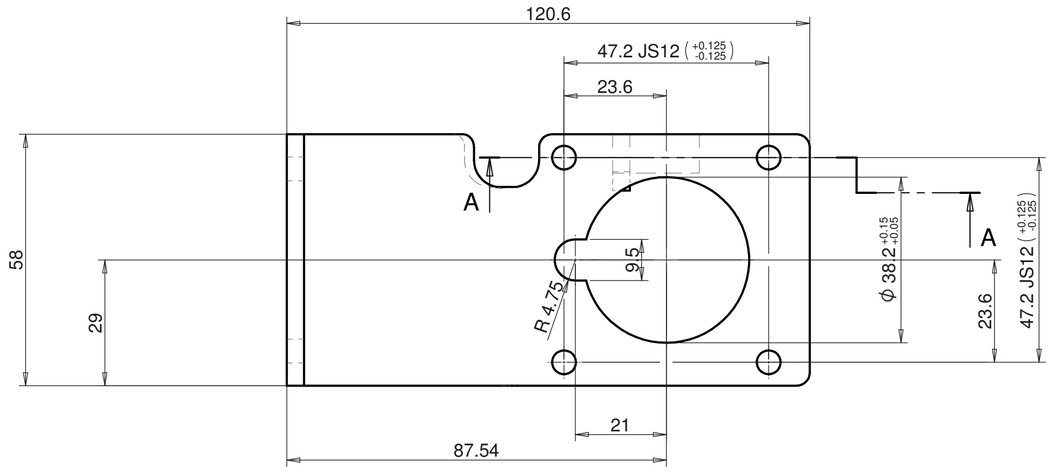

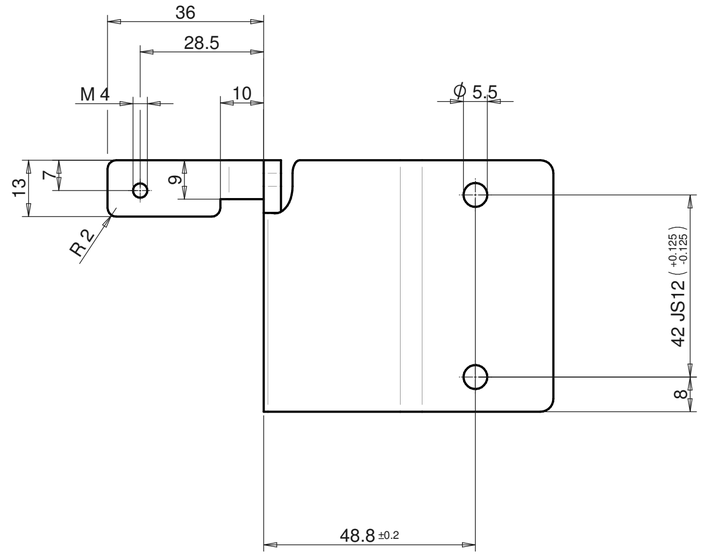

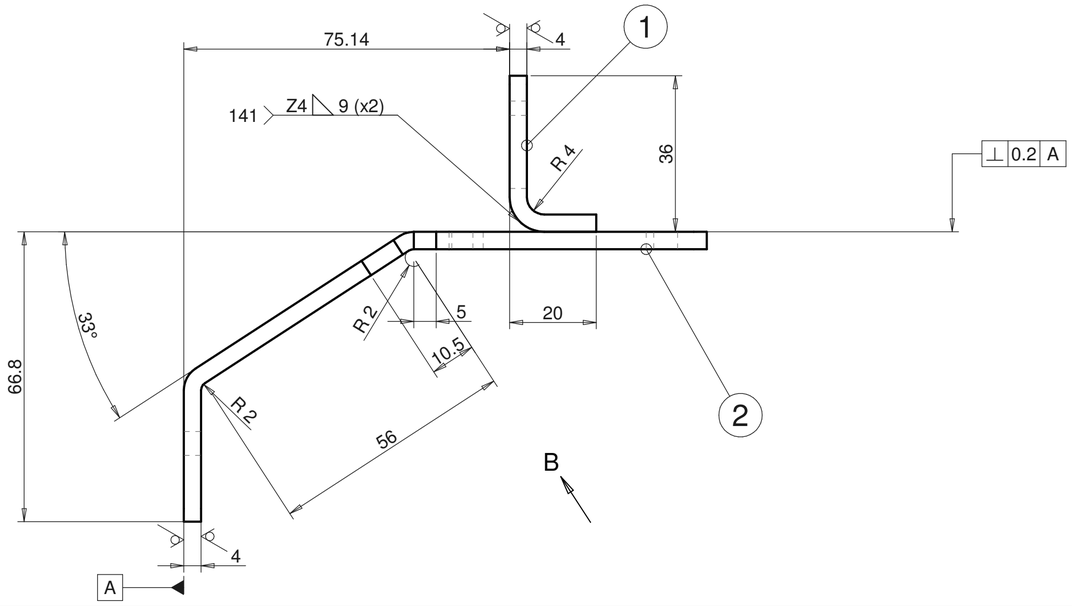

6.3 ( )

BAVA MAX 0.04

POS.	Code	Q.ty	Raw Material	Material Description	Techical Description
2	042339.1.A	1	4032_6152_99	DC01+A-G UNI EN 10130	
1	041731.0.B	1	4032_6152_99	DC01+A-G UNI EN 10130	

CN05196		01/10/2021	00
Change	Modification details:	Date Mod:	IRP
Changes to previous release: ELIMINATO PARTE TERMINALE		Obtain from:	Substitute: 042339.0.0
Material:		Code:	
Supply state:		Dimensions:	
Thermic treat.:		Hardness(T):	
Surface treat.: Fe/Zn 8÷12 A HP UNI ISO 2081 free Cr VI		Hardness(S):	

Approved

DENOMINATION: PIASTRINA MOTORE RISERVA

Savio	Draw.: Michele Simonatto	Date: 22/07/2021	042339.1.0
	Mod.: Michele Simonatto	Sheet N°: 1/1	
	App.: Giuseppe Morini	Scale: 1:1	PLATE

Reserved property of SAVIO MACCHINE TESSILI S.p.A. In accordance with the law, the contents of this drawing may not be re-produced or communicated to third parties.