01-588428-01-P-DC0000819-Approved By:S.Kalwate-Released By:A.Rampuzzo

PART N. CA588428

Automotive

FORNITORI APPROVATI SECONDO STD CARRARO 00-98-05
APPROVED SUPPLIERS ACCORDING STD CARRARO 00-98-05

ID FORNITURA ID SUPPLY	CARRARO STD	COD. FORNITORE SUPPLIER CODE	SITO PRODUTTIVO PRODUCTION PLANT	MARCATURA MARKING	COD. PARTE FORNITORE SUPPLIER PART NUMBER	DATA RILASCIO RELEASE DATE	REVISIONE REVISION	RIF.DISEGNO ARCHIVIO REF.DRAWING ON PDM
A	DVP&R-PT000021896	243110	INDIA	-	-	SEE TITLE BLOCK	SEE TITLE BLOCK	CA588428
B	DVP&R-PT000021896	208631	ITALY	-	-	SEE TITLE BLOCK	SEE TITLE BLOCK	CA588428

INTERNAL INVOLUTE SPLINE DATA	ANSI B92.1 23x16/32x45°
DATA DRAWING NUMBER	CA555109

TRATTAMENTO TERMICO *HEAT TREATMENT*		
BONIFICA *HARDENING AND TEMPERING*		
DUR. NUCLEO *CORE HARDNESS*	HB	≥ 229
TEMPRA INDUZIONE *INDUCTION HARDENING*		⊛
DUREZZA SUPERF. *SURFACE HARDNESS*	HRC	58-62
PENETRAZIONE EFF. CHD 450 HV1 *EFFECTIVE CASE-HARDENING DEPTH*	mm	1-3

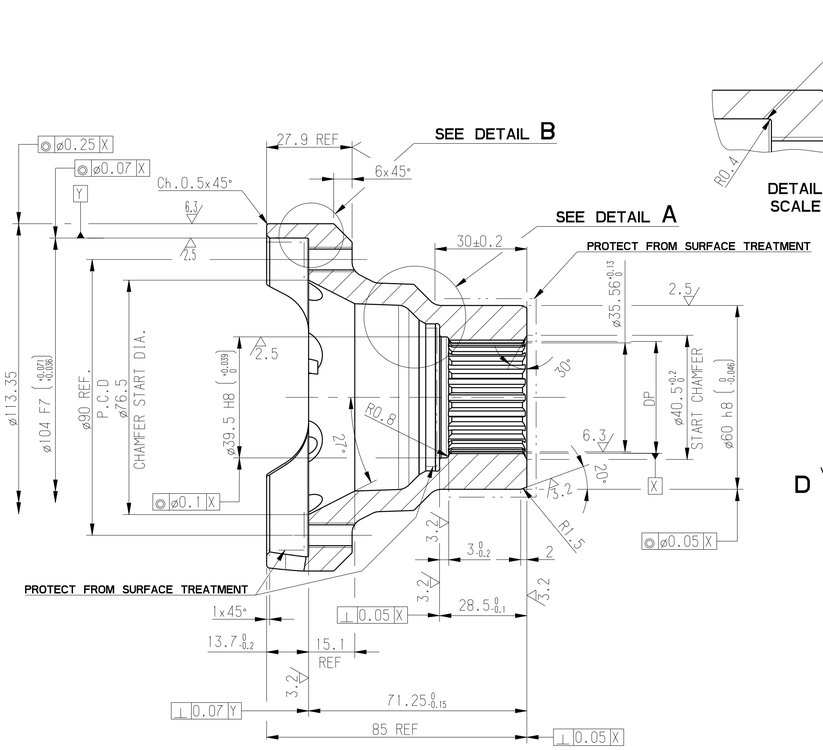

SECTION A-A

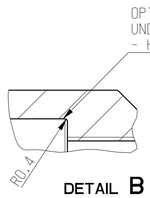

DETAIL B
SCALE 2:1

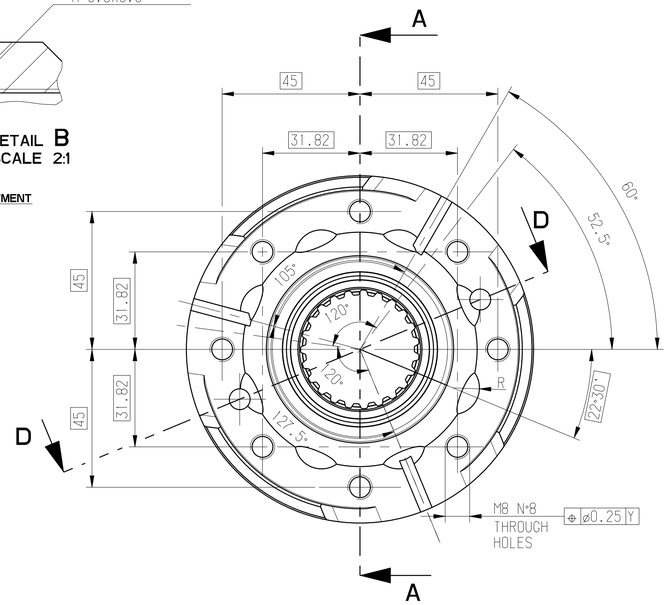

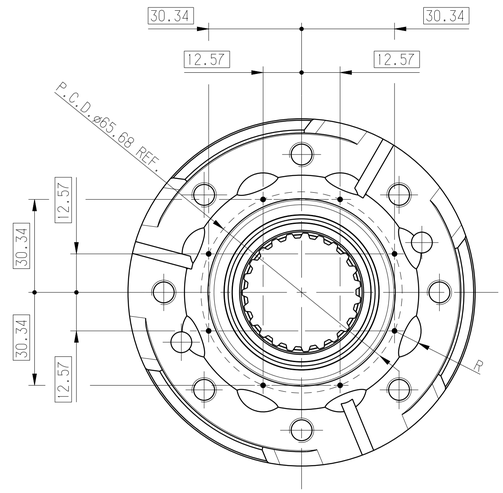

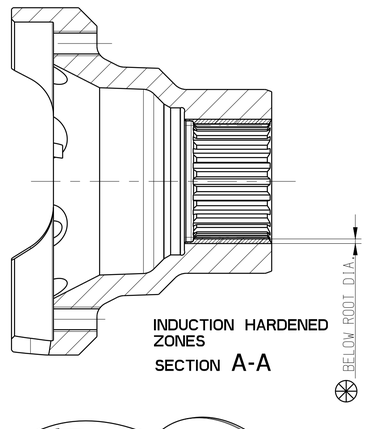

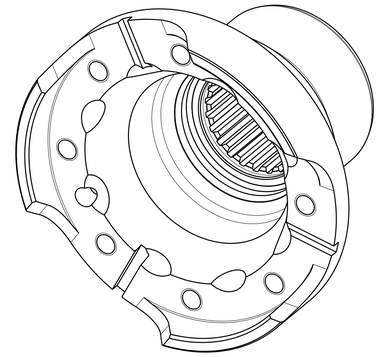

FORGING REFERENCE DIMENSION

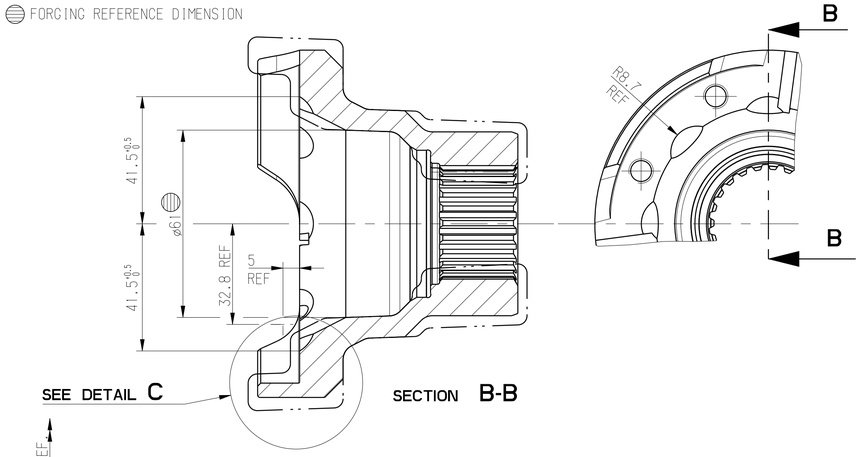

SECTION B-B

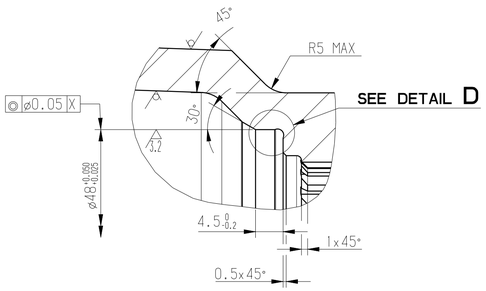

DETAIL A
SCALE 2:1

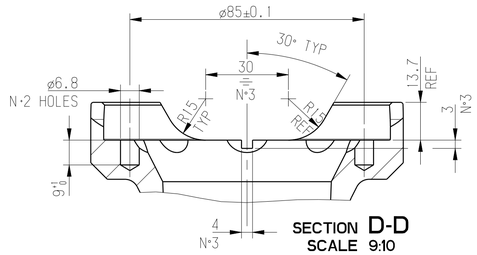

SECTION D-D
SCALE 9:10

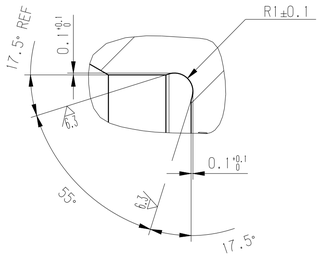

DETAIL D
SCALE 6:1

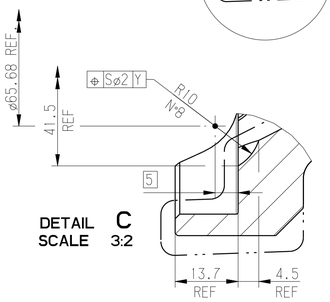

DETAIL C
SCALE 3:2

SURFACE TREATMENT AFTER MACHINING
E-COAT (KTL) ACRYLIC ON THE MACHINING COMPONENT
FILM THICKNESS: ISO-2808 20µm
SALT SPRAY RESISTANCE ISO-9227 500h (2.0 mm CREEP)
TO PROTECT ALL THREADED HOLES

CODICE RIFERIMENTO FILE 3D
REFERENCE 3D FILE P.N.
CA569544-01.igs

12.5 6.3 3.2 2.5 1.6

C	PART WITH KEY C'S	N. OF KEY C'S 0

PART INCLUDES KEY CHARACTERISTICS WITH PROCESS CAPABILITY DEMONSTRATION
SEE CARRARO STD N. 0-56-95

S	PART WITH SAFETY C'S	N. OF SAFETY C'S 0

PART INCLUDES SAFETY CHARACTERISTICS WITH DOCUMENTATION REQUIREMENTS AND PROCESS CAPABILITY DEMONSTRATION
SEE CARRARO STD N. 0-56-95

REV.	CHANGE	DRAWN	APPROVED	DATE
1	ISSUED DRAWING	ASHWINI THORAT	F.PROSPERO	22/03/2022

ALL PROPRIETARY RIGHTS RESERVED BY CARRARO S.P.A. THIS DRAWING SHALL NOT BE REPRODUCED OR IN ANY WAY UTILIZED FOR THE MANUFACTORE OF THE COMPONENT OR ASSEMBLY HEREIN ILLUSTRATED AND MUST NOT BE RELEASED TO OTHER PARTIES WITHOUT WRITTEN CONSENT BY CARRARO S.P.A. ANY INFRINGEMENT WILL BE LEGALLY PURSUED.

STD. MATERIAL	MAT204 STD CARRARO 1-00004	OPT. MATERIAL	-
HEAT TREAT.	SEE TABLE	DATE 21/03/2022	CF 2
SURF. TREAT.	SEE TABLE	GENERAL REFS.	STD CARRARO 0-00055
PRODUCT	AXLE HS 6.04 -8.06 HD		
DESCRIPTION	FLANGE 569544 PINION FLANGE		

CARRARO

CARRARO S.p.A. - Via Olmo, 37
35011 CAMPODARSEGO (PD) - ITALY

CASTING REFS.	569544	A1	WEIGHT 1.45 kg
REPLACES	-		SCALE 1:1
PART N.	CA588428		SHEET 1/1