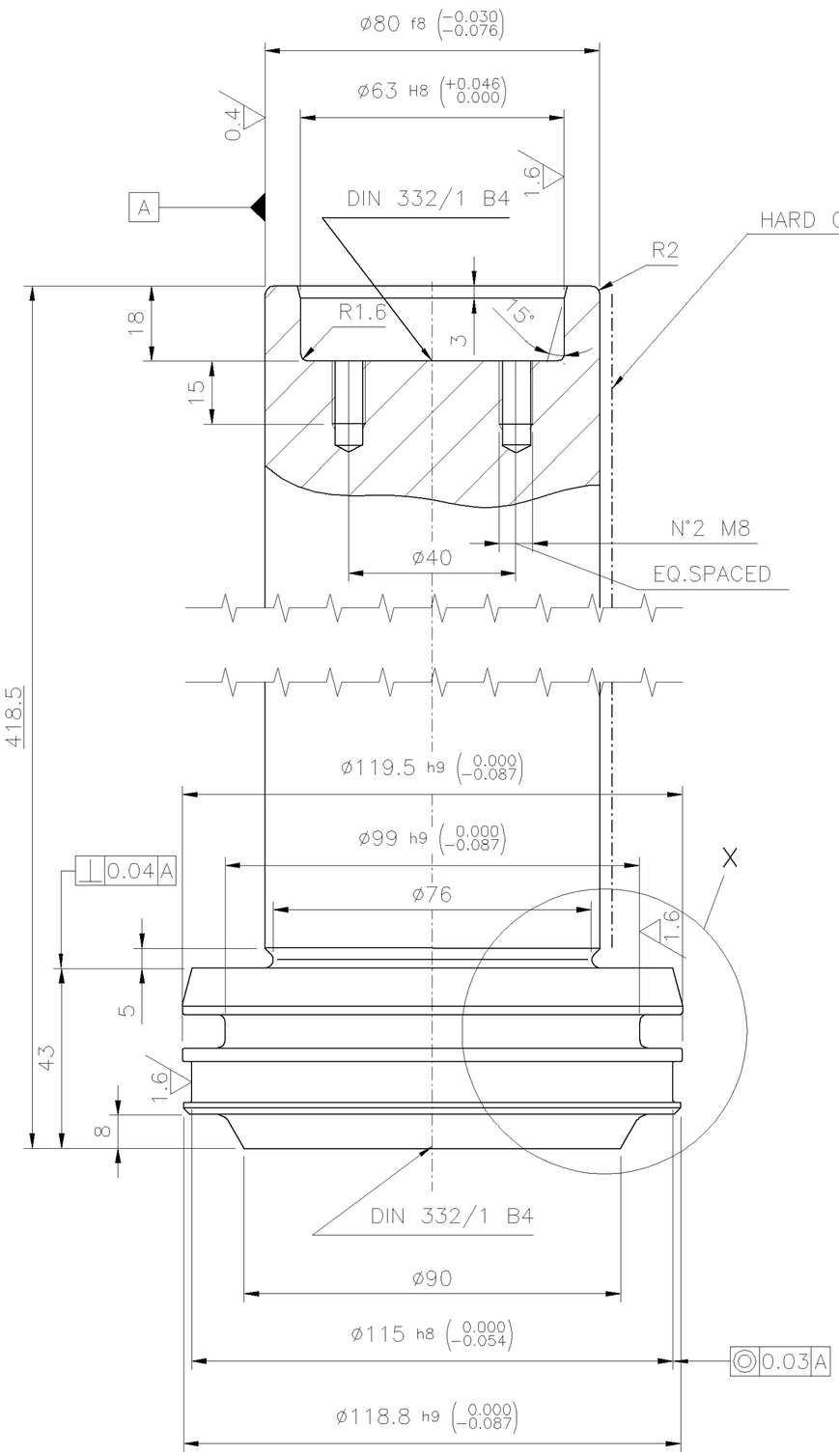

X (2:1)

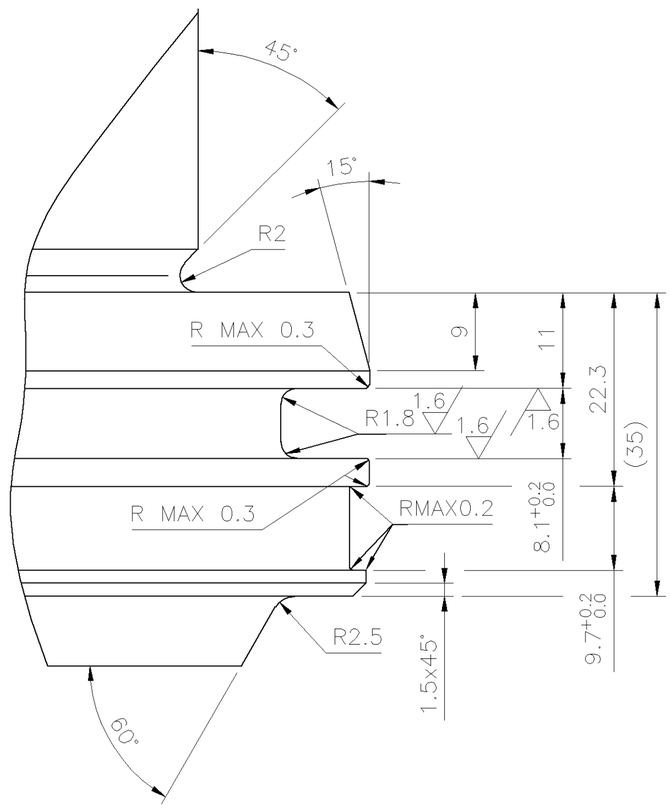

ULTRASONIC INSPECTION CLASS 2 STANDARD 2.8.122
PENETRANTS LIQUIDS INSPECTION CLASS 3 STANDARD 2.8.120

Rev.	Date	Revisions description	Drawn by	Checked by	Approved by
01A	03 Aug 2016	ADDED PRECISION CLASS	Boonprak Y	Chaibanm T	
01	08 Jun 2013	AGGIUNGI TABELLA MATERIAL GB ADD GB MATERIAL TABLE	Wangz6	Yans	
00	12 Feb 2008	EMESSO PER COSTRUZIONE ISSUED FOR CONSTRUCTION	Lesniewski	Adamiak	Borlini

Material 1 (where not indicated on drawing): 42CrMo4 EN 10083-3 — State of supply Mat.1: Danieli Supply Std. — Supply Class — Pattern DB

Material 2 — State of supply Mat.2: Danieli Supply Std. — Supply Class — Casting Code

Material 1 Equivalent

Heat Treatment — On Drawing Symbol, if required, ---:
Bonifica
Durezza superficiale 255-285 HB
Quenching and tempering
Surface hardness 255-285 HB

Coating — On Drawing Symbol, if required, ---:
CROMATURA — F.Cr - UNI ISO 6158 m micron
IN ACCORDO ALLA NORMA DANIELI 2.8.305 100-120
CHROMIUM PLATING — F.Cr - UNI ISO 6158 m micron
AS PER DANIELI STANDARD 2.8.305 100-120

Unquoted radius	Unquoted bevels	Dimensions without tolerance as per	Machinings	Prec.Class	Max. Welding Class
0.2 (mm)	0.2X45° (mm)	DANIELI STD 2.4.103	3.2 / 1.6 / 0.4	D	

Project Name

DANIELI WEAN UNITED

Job nr
Obtained from 4.558445.D
Replaces

Family code/Machine code: 42891
Weight (Kg): 17.5
J (Kgm²)

Title: PISTONE / PISTON

Scale: 1:1
Format: A2
Nr. of sheets: 001
Sheet: 001 Follow

DANIELI Shop number: 5.306412.S
Revision: 01A
DANIELI dwg number
Revision

ALTERNATIVE MATERIAL FOR: 42CrMo4 EN10083-3
MATERIAL: 42CrMo
STANDARD: GB/T 3077

According to law DANIELI & C. SpA considers this document to be a company secret and therefore prohibits any person to reproduce or disclose it or make it known in whole or in part to other parties or to competitors without specific written authorization of DANIELI's Management

File nr FD12-000-608-383

COMPUTER AIDED DESIGN -A