GENERAL TOLERANCES
Angular dimension +-1° - Roundness range of tolerance from IT4 to IT11. Must be contained within half of dimensional tolerance.
MACHINED holes H14 shafts h14 linear values Js14 -- ROUGH holes H16 shafts h16 linear values Js16
SHEETS cutting/laser cutting/punching Js13 holes H13 bending/pressing Js14 -- ALUMINIUM DIE CASTING Savio Norm 4011_1005_00
PLASTIC MATERIALS according to DIN 16901 -- CAST IRON Savio Norm 4011_1003_00
The general tolerances for ROUGH of plastic (DIN 16901) of aluminium (4011_1005_00), of CAST IRON (4011_1003_00), must be intended H for holes, h for shafts, Js for all the other dimensions

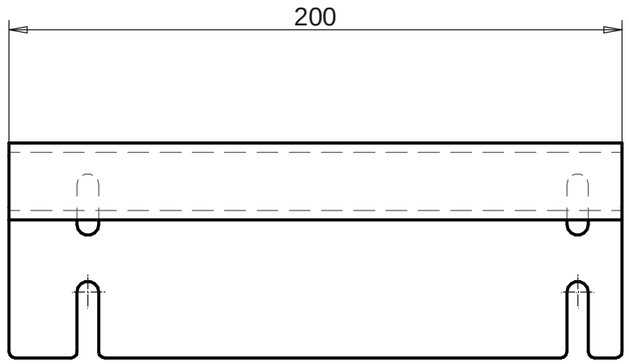

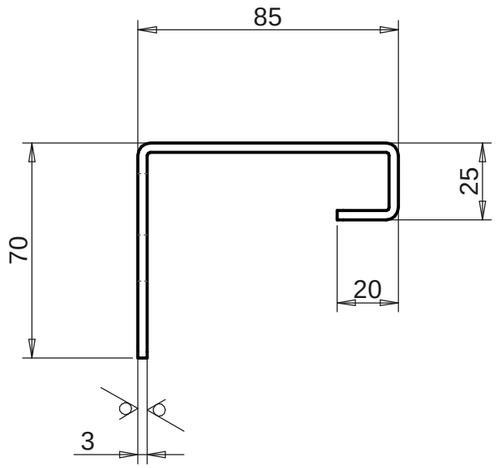

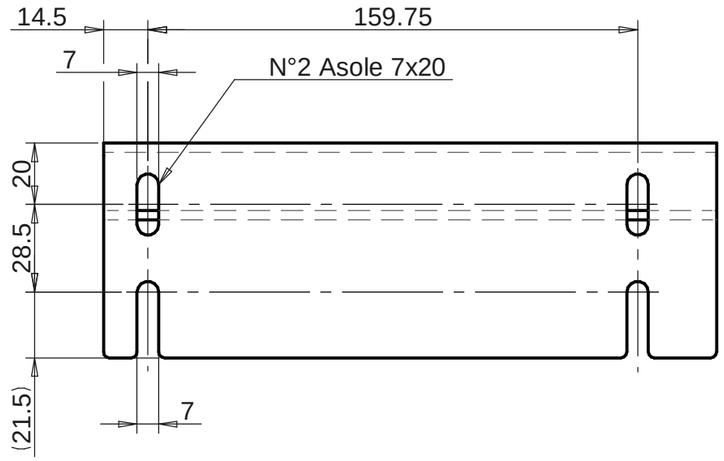

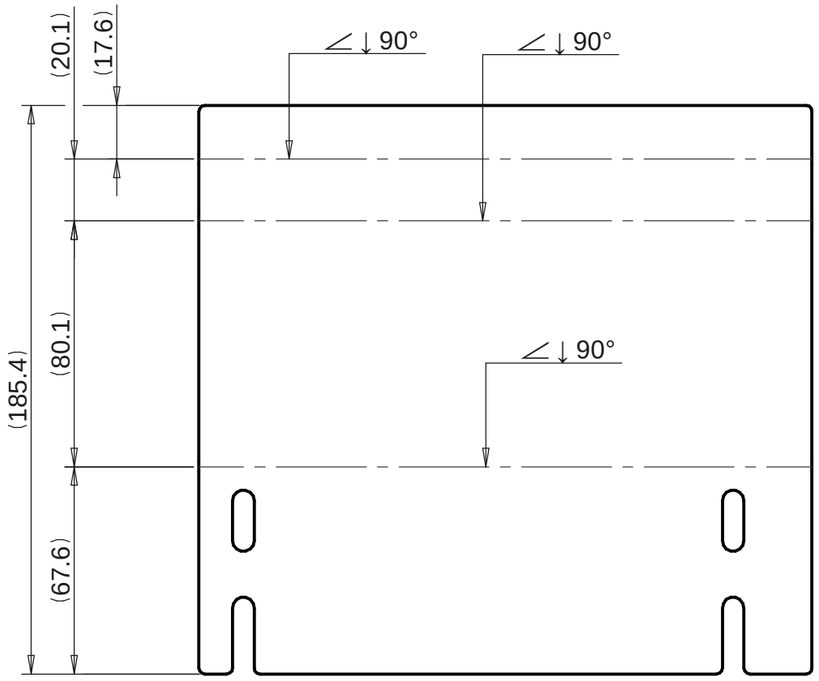

- NOT VALID FOR TEMPLATE: DEVELOPMENT CALCULATED WITH NEUTRAL AXIS STANDARD AT 0.33 THICKNESS.
  Non valido per attrezzatura: sviluppo calcolato con asse neutro standard a 0.33 dello spessore lamiera.

6.3 ( )

- FREE OF BURRS AND EDGES/Esente da bave e spigoli vivi
- BENDING INTERNAL RADIUS/Raggi interni di piega: R 1
- UNDIMENSIONED RADIUS /Raggi non quotati: R 2

CN05577		09/02/2022	00
Change	Modification details:	Date Mod:	IRP
Changes to previous release:	Obtain from:	Substitute:	
Material:	Code:		
Supply state:	Dimensions:		
Thermic treat.:	Hardness(T):		
Surface treat.: Fe/Zn 8÷12 A HP Dehydrogenated 220°C UNI ISO 2081 free Cr VI	Hardness(S):		

DENOMINATION: STAFFA FERMO CARRELLO DI GIUNTA

Savio	Draw.: Luigi Gorgatti	Date: 08/02/2022	049660.0.0
	Mod.: Luigi Gorgatti	Sheet N°: 1/1	
	App.: Giuseppe Morini	Scale: 1:2	BRACKET

Reserved property of SAVIO MACCHINE TESSILI S.p.A. In accordance with the law, the contents of this drawing may not be re-produced or communicated to third parties.