LINEAR MEASURE WITH TOLERANCES: 0.0 > 400 mm 0.00 > 60 mm
HOLES WITH TOLERANCES: 0.0 > 150 mm 0.00 > 50 mm and 0÷18mm
SHAFT WITH TOLERANCES: 0.0 > 150 mm 0.00 > 60 mm

PAPER SPACE:

ATTENTION: ALL DIMENSIONS WITHOUT TOLERANCE INDICATION ARE CRITICALS
FOR THE SUPPLIER: VERIFYING ALL DIMENSIONS INCLUDED IN THE FIELDS REPORTED IN THE TABLE AND RETURNING THE SIGNED DRAWING FOR CHECKING DONE

FILE: O:\0576\DIS-M\M06501.dwg

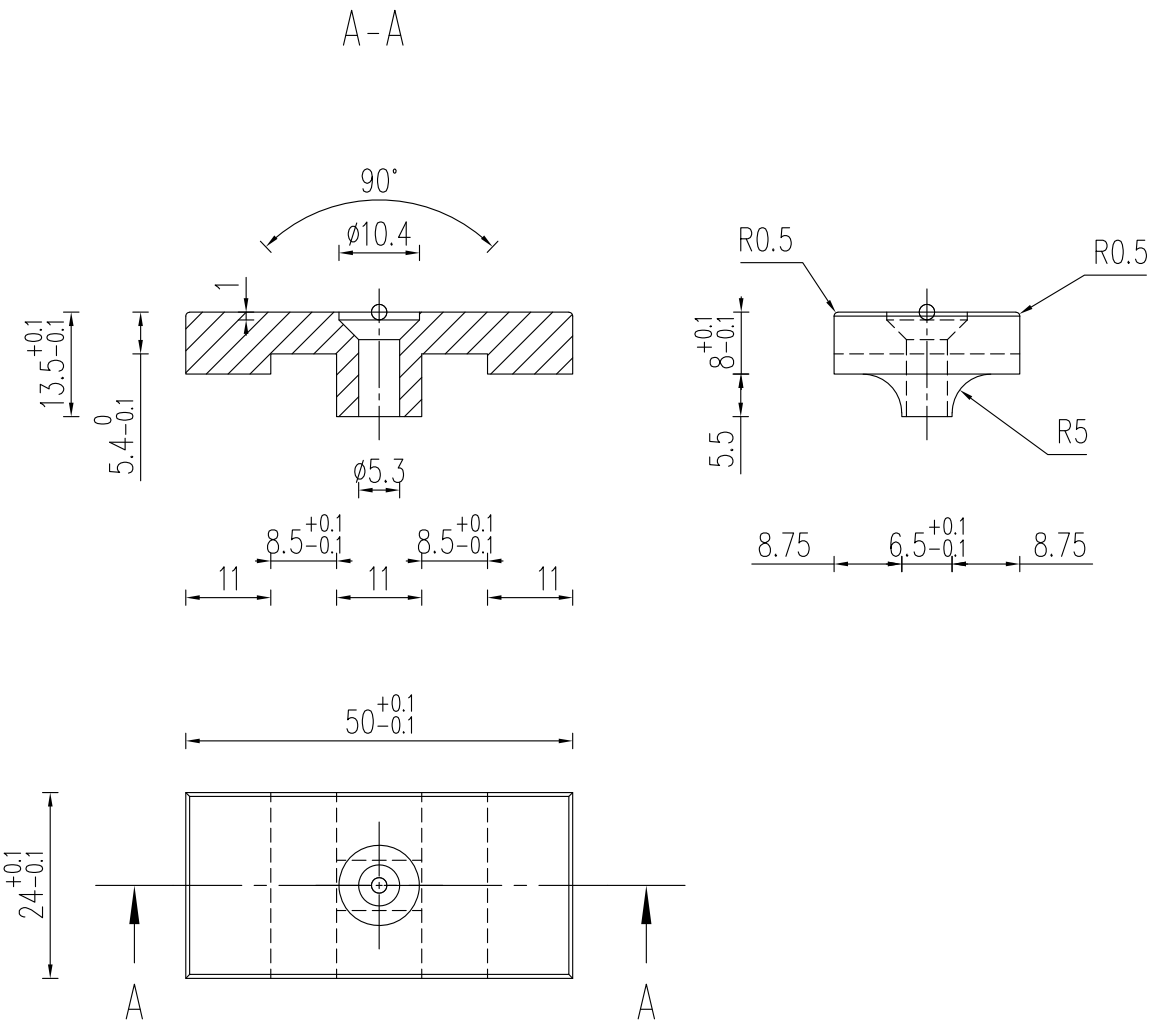

Fe 37B UNI7070/72 Fe 360B UNI7070/82 St 37-2 DIN17100

MATERIAL :					
SUPERFIC. TREAT. : GALVANIZE					
WORKORDER :	PIECES N° :	REV.	DATE	SIGN	UPDATE

MECHANICA HANDLING SYSTEMS
Mechanica srl Via Ungaresca, 5 – 33080 San Quirino (PN) – Italy companies of MHS GROUP

STATE AREAS ACCORDING TO UNI ISO 1302 EXCEPTING DIFFERENT INDICATION
GENERAL FORM TOLERANCE ACCORDING TO UNI 7226-73
DIMENSION WITHOUT INDICATION OF TOLERANCE FINE DEGREE OF ACCURACY ACCORDING TO UNI EN 22768 1 2
ELIMINATE SHARP EDGES CHAMFERING 0.5X45° MAX

CODE	DATE
EA10576M06501	23/03/2010

SIGN	CHECK	APPROVE
G.P.		

PAPER	SCALE	M.U.
A4	1:1	mm

CLIENT :

DENOMINATION:FRONT RETAINER ON CHAIN 3/4" TMP

In accordance with the provisions in force of the law, this drawing cannot be reproduced or given to anybody else without our consent

DRAW N.: 0576M06501