Revisioni				
Area	Rev.	Descrizione	Data	Approvata
A2, D4	01	Note cartiglio e saldatura	09/01/2023	A.Furlan

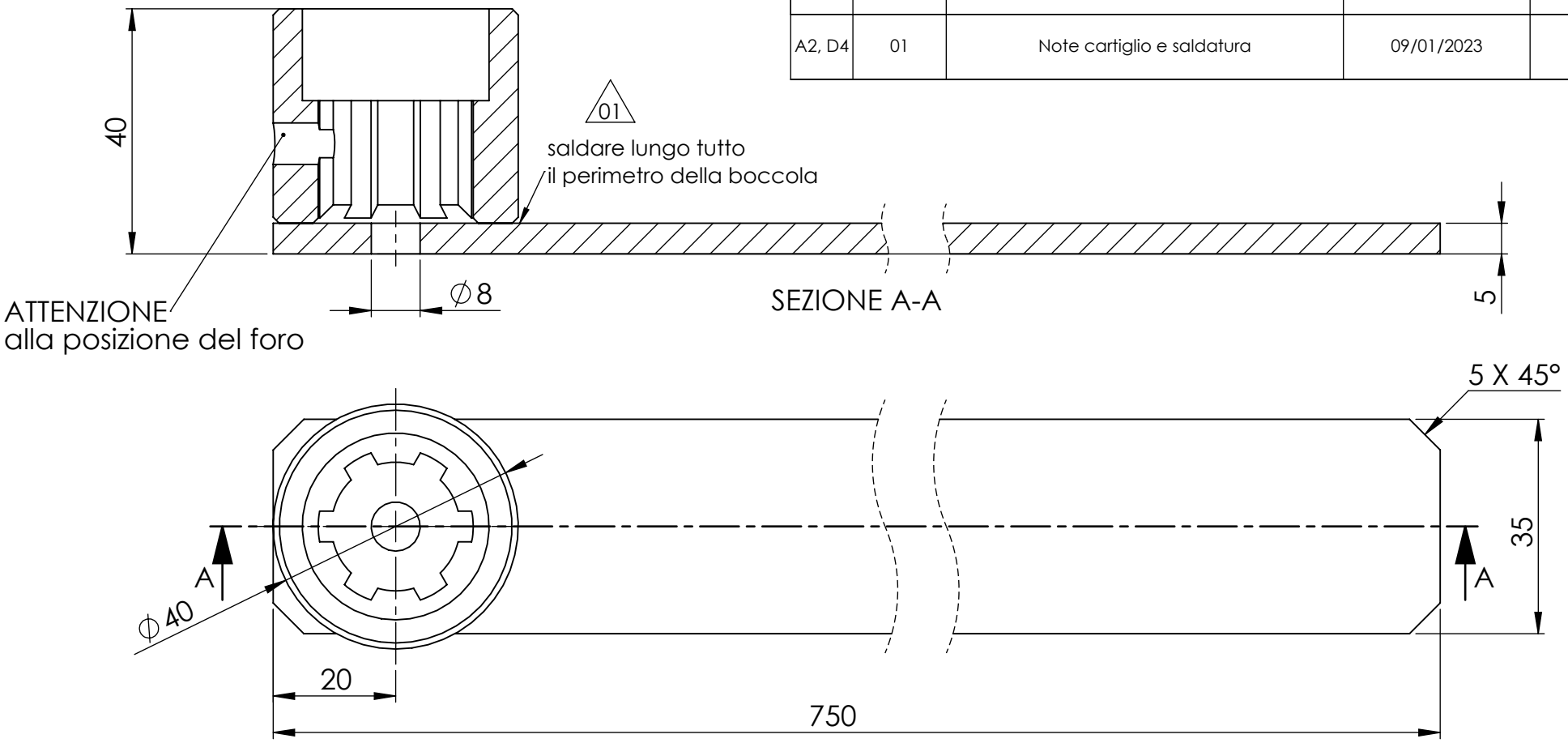

KEY AUTOMATION

DIMENSION ARE IN MILLIMETERS
CHAMFER WITHOUT DIMENSIONING: 0.5x45°
RADIUS WITHOUT DIMENSIONING: R0.5
GENERAL TOLERANCES: UNI EN 22768 m-H
UNI EN 12020-2
DIMENSIONS ARE AFTER TREATMENT IF REQUIRED, UNLESS SPECIFIED
WELDING PROCESSES ACCORDING TO ISO 4063:2011
ISO 857-1:1998

DRAWN	A.Furlan	COLOR	naturale
DATE	09/01/2023	TREAT/FINISH	Rivestimento Elettrolitico ISO 2081 - Fe/Zn12/A
APPROVED	D.Bassetto	MATERIAL	S235JR 01
DATE	09/01/2023	TITLE	Piatto con boccola

WEIGHT (g): 1230

+V = INCREASE WITH DRAFT
-V = DECREASE WITH DRAFT

CODE: 510P35L750B

REV. 01

SCALE 1:1

SHEET 1 1

Sheet size: A4