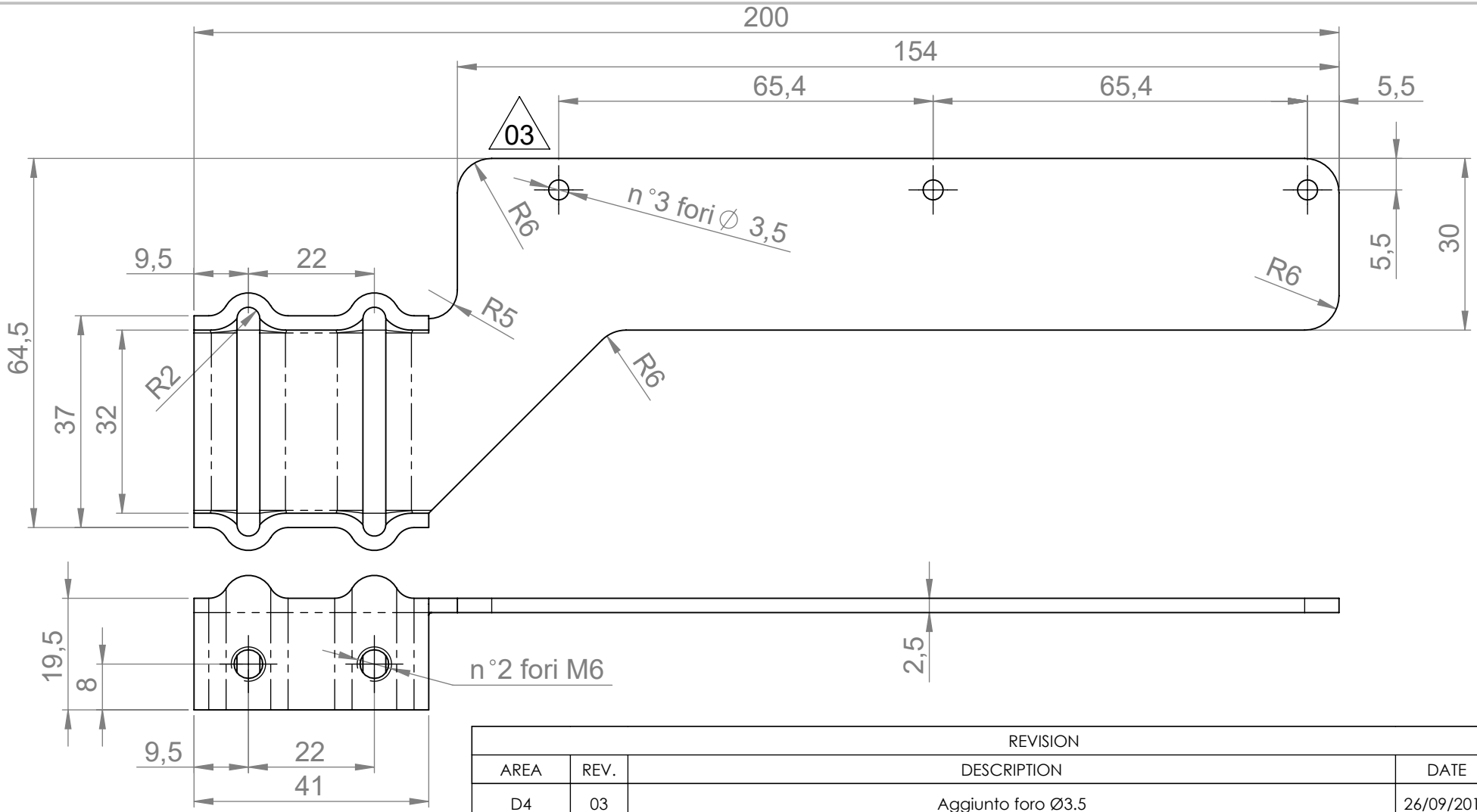

REVISION				
AREA	REV.	DESCRIPTION	DATE	DRAWN
D4	03	Aggiunto foro Ø3.5	26/09/2019	Breda

3D View

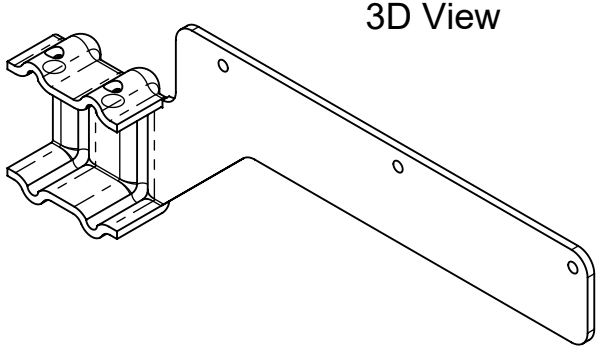

KEY AUTOMATION

This drawing is exclusive property of KEY AUTOMATION

DIMENSION ARE IN MILLIMETERS
CHAMFER WITHOUT DIMENSIONING: 0.5x45°
RADIUS WITHOUT DIMENSIONING: R0.5
GENERAL TOLERANCES: UNI EN 22768 m-H
UNI EN 12020-2

DRAWN	Tecnico	COLOR	WEIGHT (g) 168.5
DATE	12/06/2012	TREAT/FINISH	Sbavato - Zincato F ZnB12
APPROVED	Tecnico	MATERIAL	S235JR
DATE	12/06/2012	TITLE	Staffa FC magnetico DX

+V = INCREASE WITH DRAFT
-V = DECREASE WITH DRAFT

CODE
520STDXD

REV. 03

SCALE 1 : 1

SHEET 1*of* 1