GENERAL TOLERANCES
Angular dimension +-1° - Roundness range of tolerance from IT4 to IT11. Must be contained within half of dimensional tolerance.
MACHINED holes H14 shafts h14 linear values Js14 -- ROUGH holes H16 shafts h16 linear values Js16
SHEETS cutting/laser cutting/punching Js13 holes H13 bending/pressing Js14 -- ALUMINIUM DIE CASTING Savio Norm 4011_1005_00
PLASTIC MATERIALS according to DIN 16901 -- CAST IRON Savio Norm 4011_1003_00
The general tolerances for ROUGH of plastic (DIN 16901) of aluminium (4011_1005_00), of CAST IRON (4011_1003_00), must be intended H for holes, h for shafts, Js for all the other dimensions

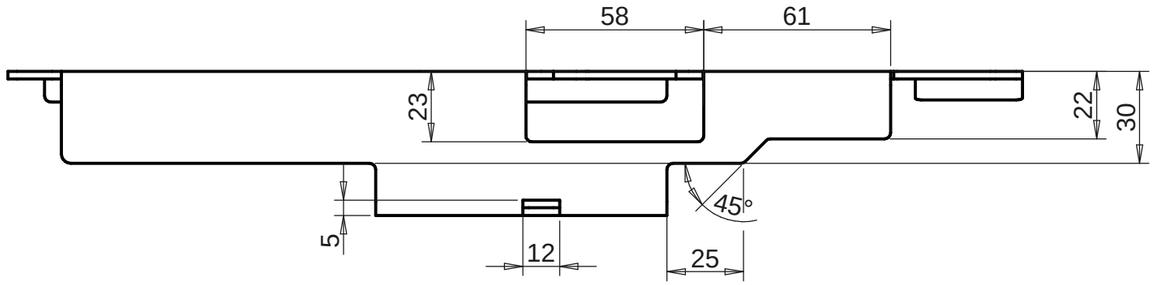

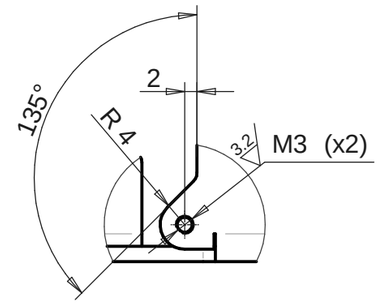

DET./Part. A
SCALE/Scala: 1:1

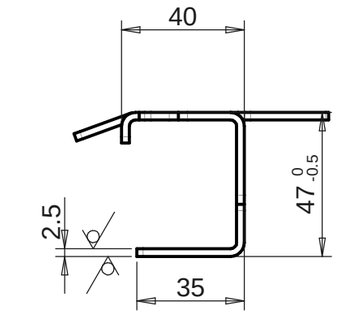

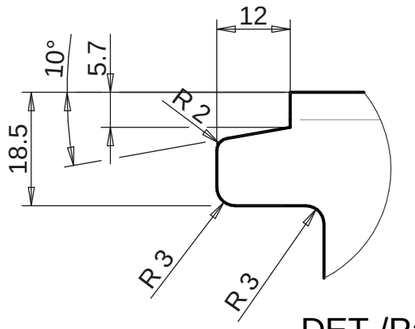

DET./Part. B
SCALE/Scala: 1:1

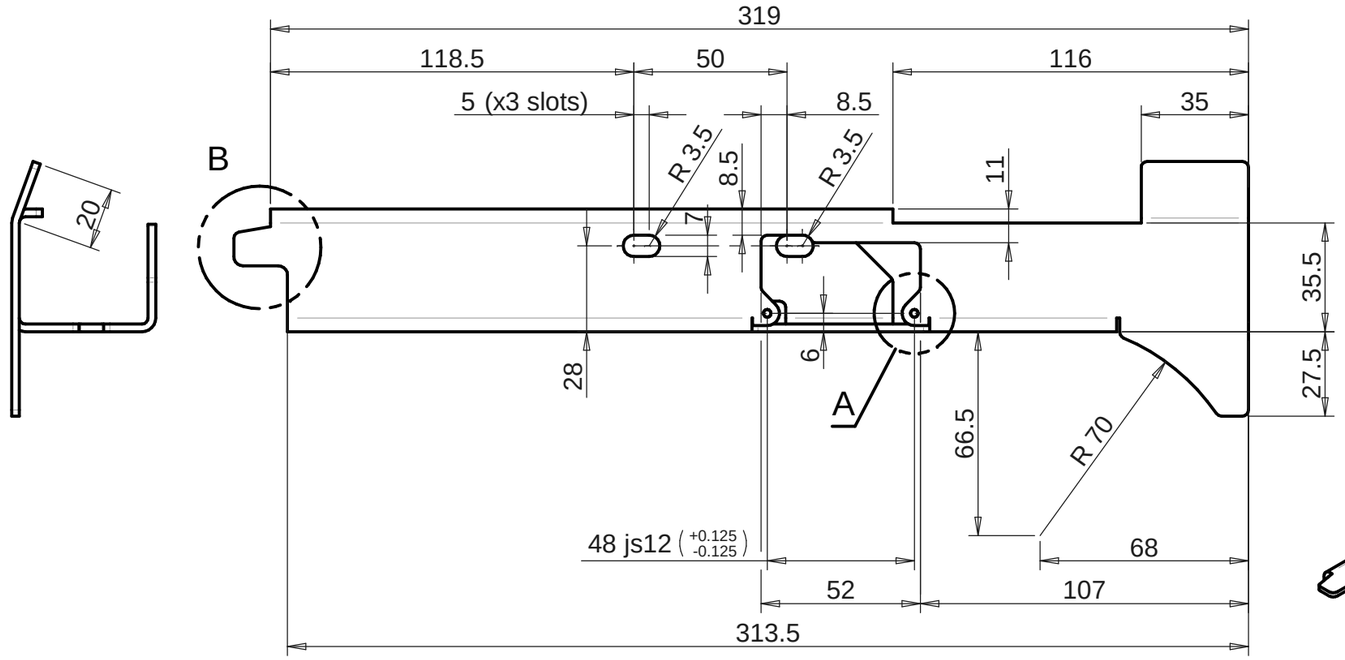

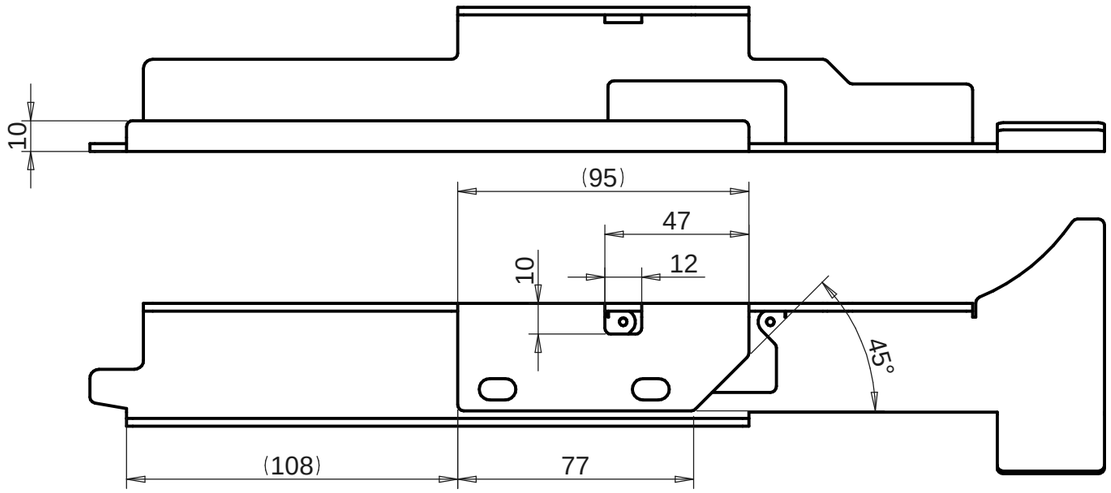

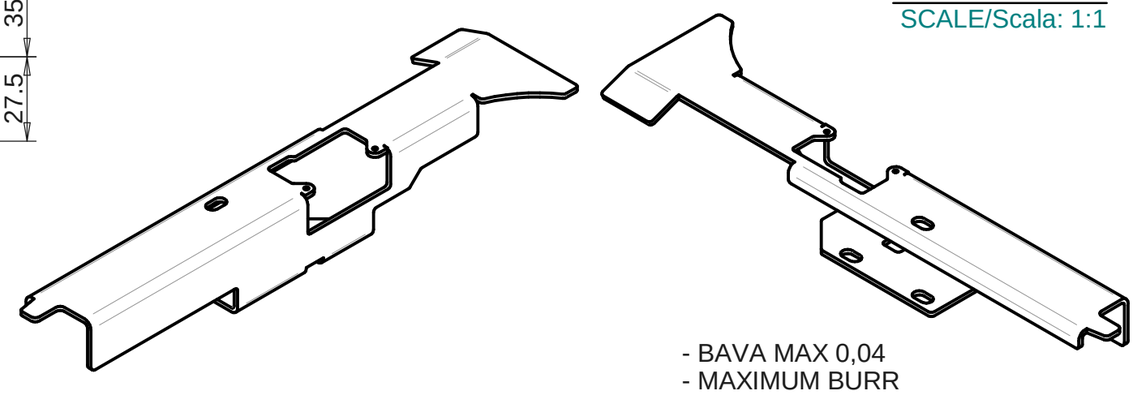

- BAVA MAX 0,04
- MAXIMUM BURR

- RACCORDI NON QUOTATI R2
- FILLETS WITHOUT DIMENSION

- RAGGI INTERNI DI PIEGATURA R2
- INTERNAL BENDING RADIUSES

6.3 (3.2)

CN06205	RIMOSSO SCARICO ZONA B2	13/10/2022	01
Change	Modification details:	Date Mod:	IRP
Changes to previous release:	MODIFICATA ZONA D4	Obtain from:	Substitute: 048472.1.0
Material:	S235J2G3 +N UNI EN 10025	Code:	4032_6002_99
Supply state:	+N: NORMALIZING ROLLING	Dimensions:	
Thermic treat.:		Hardness(T):	
Surface treat.:	Cataphoresis epoxy graphite black RAL9011 4010-0003-00	Hardness(S):	

DENOMINATION: GUIDA PIATTELLO CON PULITRICE PROXIMA DX

Ros s.r.l.
Via Crosera, 42 - Zona Industriale
33082 AZZANO DECIMO (PN)
Tel. 0434 633318 r.a. - Fax 0434 640639
C.F. e P. IVA 01278530934

Draw.:	Enrico Gaiotto	Date:	06/06/2022
Mod.:	Enrico Gaiotto	Sheet N°:	1/1
App.:	Stefano Malfante	Scale:	1:2

048472.2.0

GUIDE