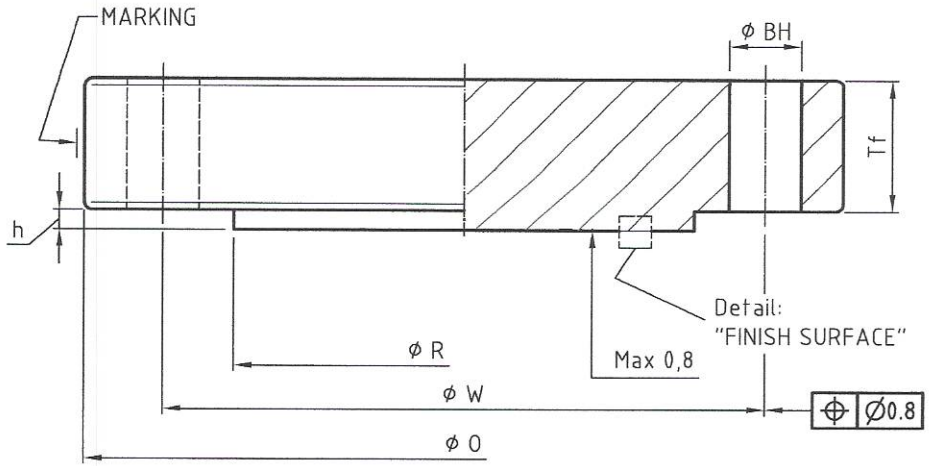

DIMENSIONS		TOLERANCES
O	152,4	± 1,6
Tf	17,5	+3,0 / -0
B	50,8	Max
W	120,7	± 0,8
BH	19,1	+1,0 / -0,5
NUM. HOLES	4	
R	91,9	± 0,8
h	1,6	± 0,2

REV.N°	REVISION NOTE	DATE
0	ISSUE	03/07/2008

NOTE:

DETAIL: "FINISH SURFACE"

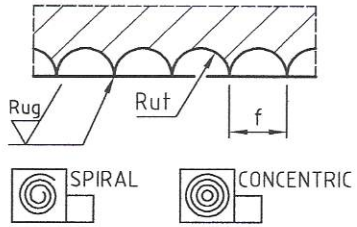

f	0,51
Rut	1,6
Rug	3,2 - 6,3

COATING								
		NOT PROTECT.		HOT DIP. GALV.		HYDRO PAINT		EPOXIDE
		OIL PROTECT.		GALVANISED		SOLV. PAINT		SPECIAL

DETAIL: MARKING

☐ STANDARD TYPE "V" ☐ LOW STRESS STAMP ☐ MICRO IMPACT

TEXT <LOGO FF> ITALY B16.5 <NPS> <CLASS> BL<JOINT> <MATERIAL> <HEAT N°>

EDGES
- Deburr all edges.
- Edges to be rounded R0.5 mm or
- Edge to be chamfer 0.5x45° mm.

UNITS
- Dimensions are in mm.
- Angles are in deg.
- Weight is in Kg.

R A 12.5 DET. F.S.

ITEM REF.	QUANTITY	MATERIAL	JOB NUMBER	WEIGHT
				2.4 KG

FILE	CODE	DESIGNED BY	CHECKED BY	APPROVED BY	DATE
B - 08 - 00856 - 00	FB050050150BLRF000--	Antonaci L.	Antonaci L.	Londero S.	03/07/2008

ASME B16.5 - 2" 150# BLRF

SCALE		SHEET
N.T.S.	A4	1/1