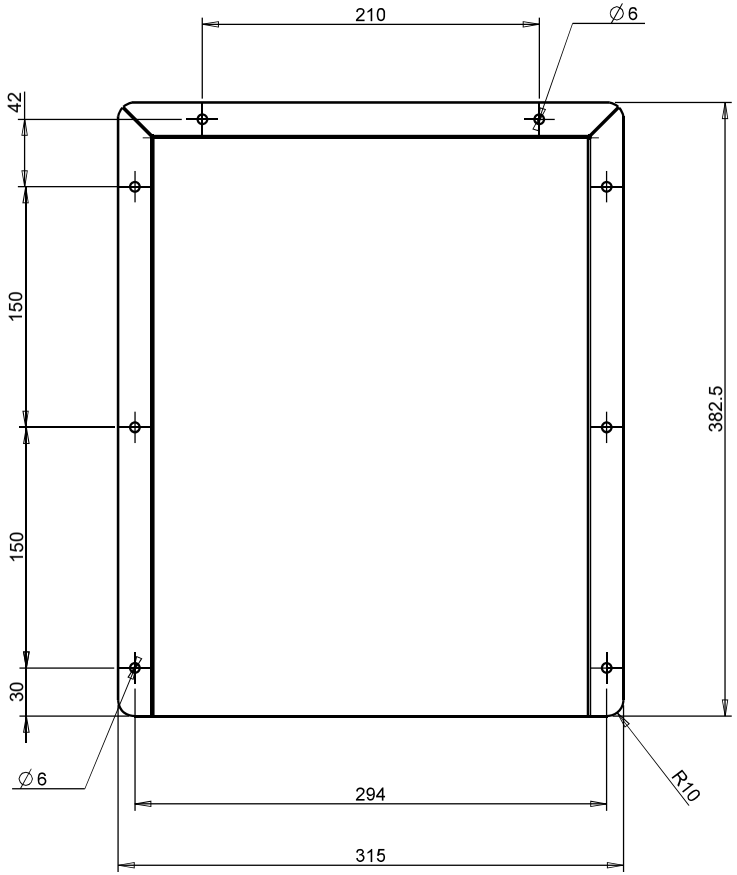

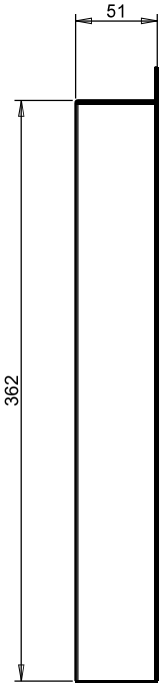

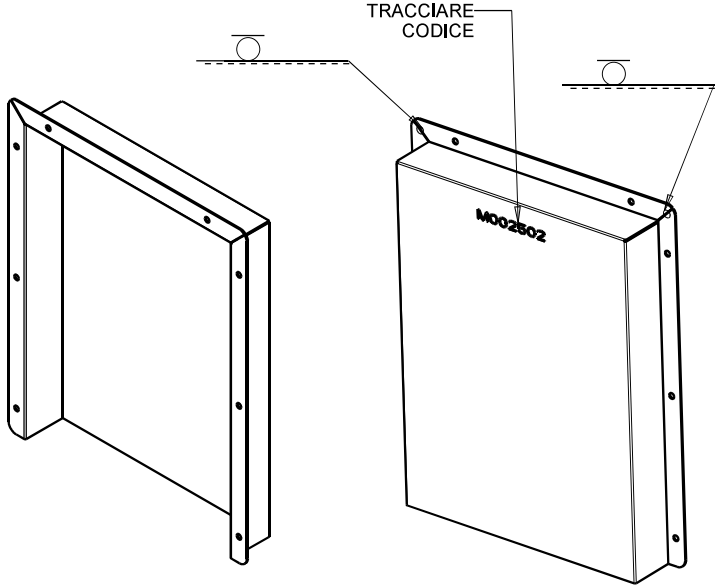

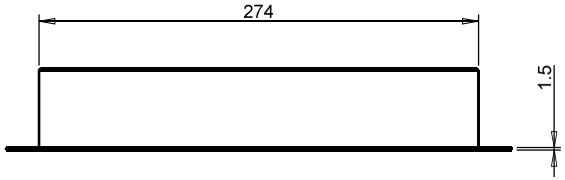

Operazioni:
- taglio laser
- pieghevole
- saldatura delle giunzioni
- molare saldatura (saldature di livello)

CODICE COMP / COMP CODE
M002502AA

REF	DESCRIPTION	DRAWN BY	CHECKED BY	EC NR	DATE
3	-	-	-	-	-
2	-	-	-	-	-
1	-	-	-	-	-

MATERIAL Lamiera zincata sp: 15/10	BUSINESS UNIT -	REPLACES 4MD129	
TREATMENT -	WEIGHT (Kg) 1.986	DESIGN OWNER IT20	DESCRIPTION COPERTURA VENTILAZIONE H51
lotto 20pz	SCALE 3/20		
	DATE 15-11-21	DRAWING NR M002502	PDM VERS. A.5
			SHEET 1 / 1

Components reflected by present drawing have to comply with Dir. 2002/95/EC (RoHS) in all its parts, materials and finishings

CRITICAL TO QUALITY

SAFETY REQUIREMENT

GENERAL TOLERANCES ON ANGULAR DIMENSIONS

ALL ANGLES = ±1°

GENERAL TOLERANCES ON LINEAR DIMENSIONS L [mm]

0 <L≤ 10	= ±0.3
10 <L≤ 150	= ±0.5
150 <L≤ 350	= ±0.7

Gen. Tolerances
SHEETMETAL PART

A3