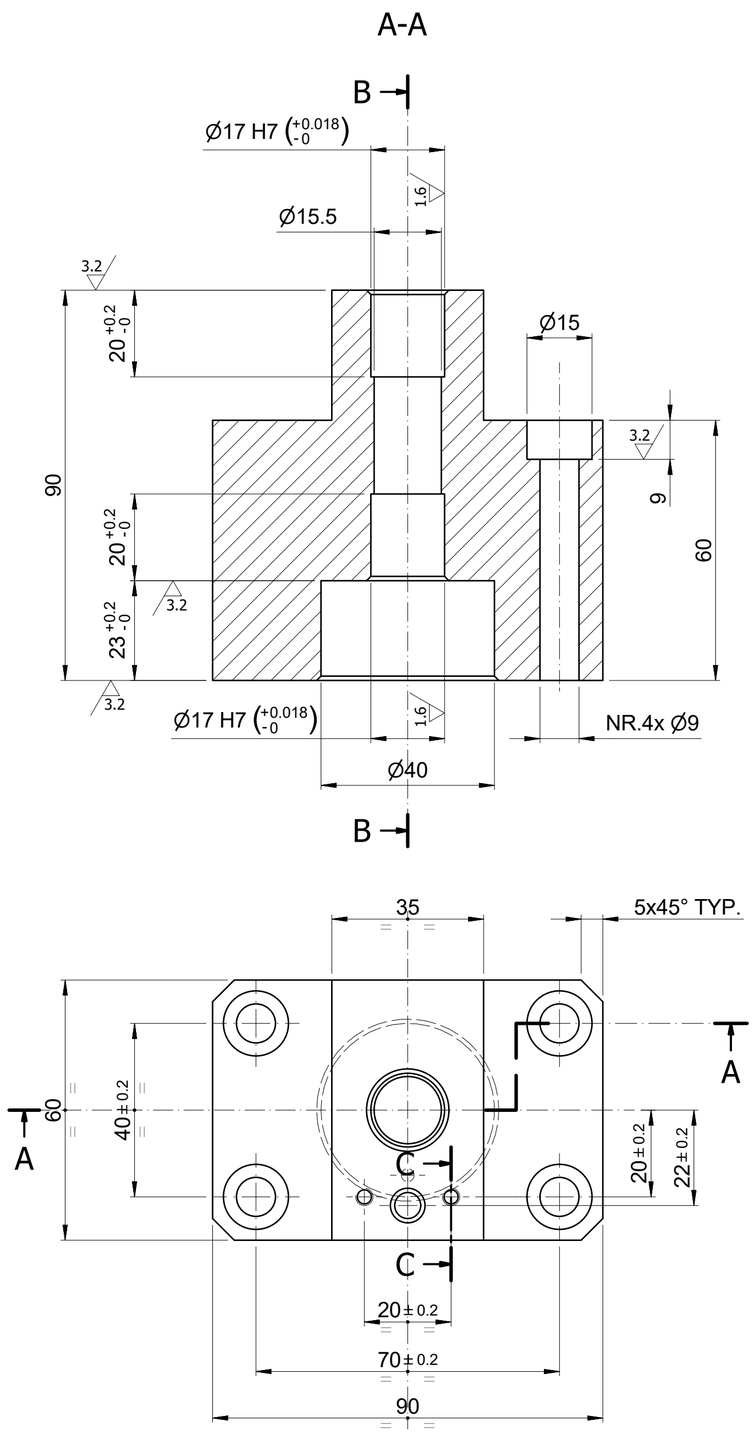

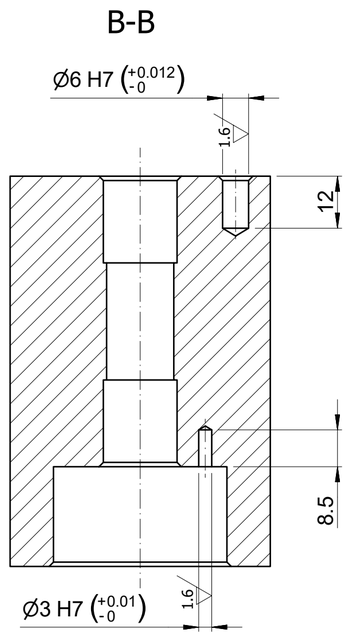

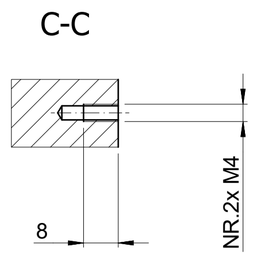

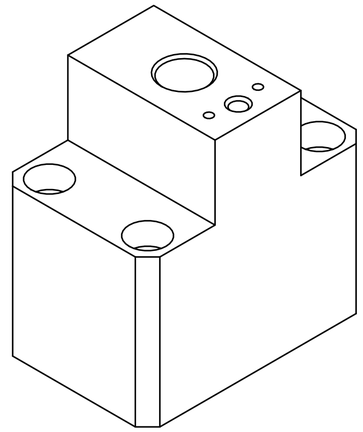

Rev.	Date	Revisions description	Drawn by	Checked by	Approved by
00	10 NOV 2022	ISSUED	SIMONATOA	SIMONATO A	

Material 1 (where not indicated on drawing): S275JR – EN 10025-2 | State of supply Mat.1 | Danieli Supply Std. | Supply Class | Pattern DB

Material 2 | State of supply Mat.2 | Danieli Supply Std. | Supply Class | Casting code

Material 3 | State of supply Mat.3 | Danieli Supply Std. | Supply Class

Heat Treatment

On Drawing Symbol, if required,

Coating: NIE – ELECTROLYTIC NICKELING | MINIMUM EFFECTIVE DEPTH [mm]

On Drawing Symbol, if required,

SURFACE HARDNESS [HV]

Unquoted radius	Unquoted bevels	Dimensions without tolerance as per	Roughness	Prec.Class	Max.Welding Class
0.8 (mm)	1X45 (mm)	DANIELI STD 2.4.103	DANI STD 2.4.105 12.5 / 3.2 / 1.6	C	

Project Name

DANIELI

Job nr

Obtained from

Replaces

Classification: SUPPORT FOR BEARINGS OR BUSHES

Weight (Kg): 2.5 | J (Kgm²)

Title: SUPPORT

Scale: 1:1

DANIELI Part Number: 000-000-296-300 | Revision: 00

Format: A2

Nr. of sheets: 001

CUSTOMER Part Number | Revision

Sheet: 001 | Follow

copyright c 2022 danieli & c. officine meccaniche s.p.a. – all rights reserved. confidential. property of danieli & c. officine meccaniche s.p.a. unauthorized reproduction, copying, distribution or any other use of the whole or any part of this documentation is strictly prohibited.

File drw0013355471.idw

COMPUTER AIDED DESIGN - I