GENERAL TOLERANCES
Angular dimension +-1° - Roundness range of tolerance from IT4 to IT11. Must be contained within half of dimensional tolerance.
MACHINED holes H14 shafts h14 linear values Js14 -- ROUGH holes H16 shafts h16 linear values Js16

The general tolerances for ROUGH of plastic (DIN 16901) of aluminium (4011_1005_00), of CAST IRON (4011_1003_00), must be intended H for holes, h for shafts, Js for all the other dimensions

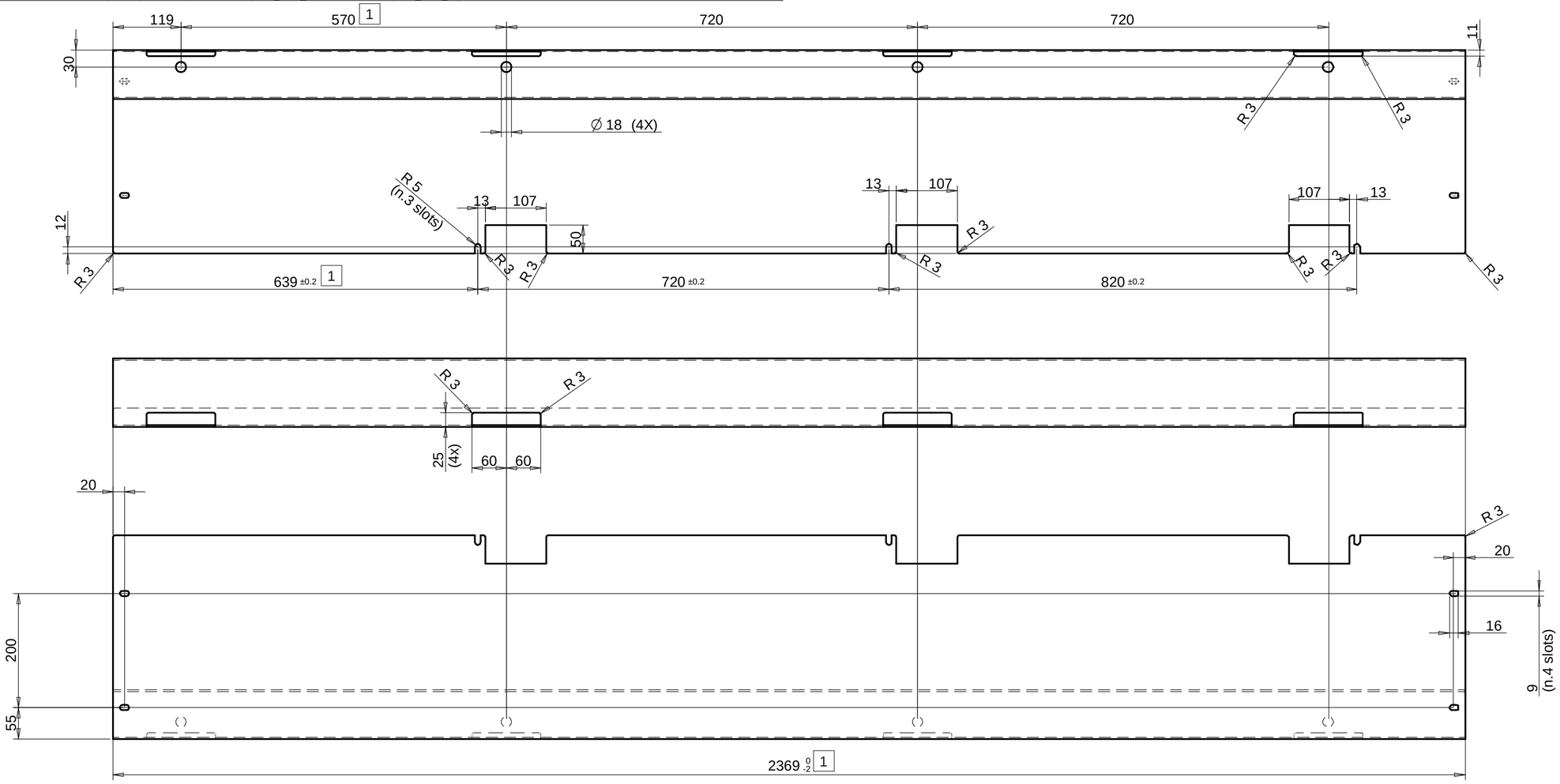

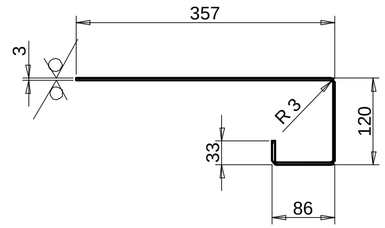

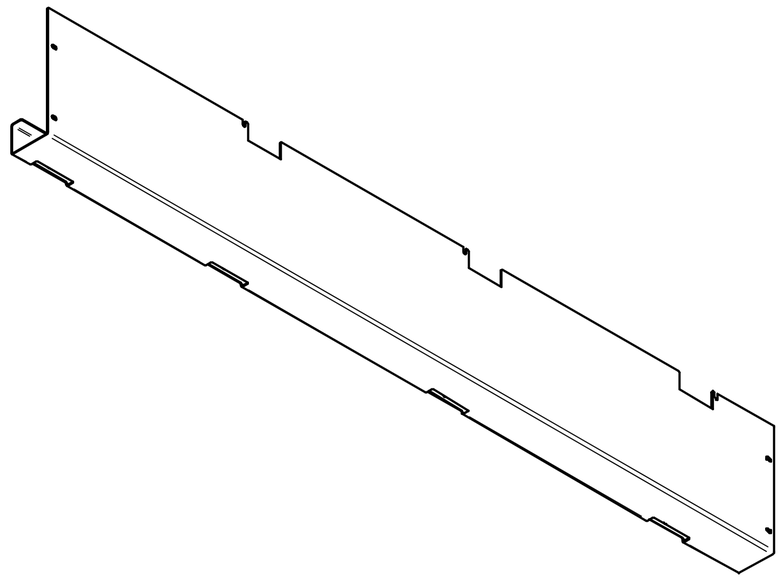

MATERIALE: lamiera antiscivolo (vedi immagine)
in acciaio Sp.3 mm

6.3 - FREE OF BURRS AND EDGES/Esente da bave e spigoli vivi

CN06751		06/07/2023	00
Change	Modification details ☐:	Date Mod:	IRP
Changes to previous release △: ACCORCIATO 150 MM	Obtain from:	Substitute: 056047.0.0	
Material: LAMIERA BUGNATA S235J2G3 UNI 4630 ZINCATA AZZ.BRILLANTE	Code: 008118.0.0		
Supply state: LAMINATO A CALDO	Dimensions: Sp=3(+-0,5)		
Thermic treat.:	Hardness(T):		
Surface treat.: Fe/Zn8c2c UNI ISO 2081 free Cr VI	Hardness(S):		
Weigth: 31.6 kg	Volume: 4031768.81 mm^3		

DENOMINATION: PEDANA CODA LYBRA DX

Draw.: Ruggero Nicodemo	Date: 05/07/2023	056047.1.0	
Mod.: Ruggero Nicodemo	Sheet N°: 1/1		
App.: Ruggero Nicodemo	Scale: 1:6	SECTION	