Original format size A1

PREMEK HI TECH s.r.l.
Via J. Linussio, 3/5
33170 PORDENONE
P. IVA 01114050931

ISO-VIEW

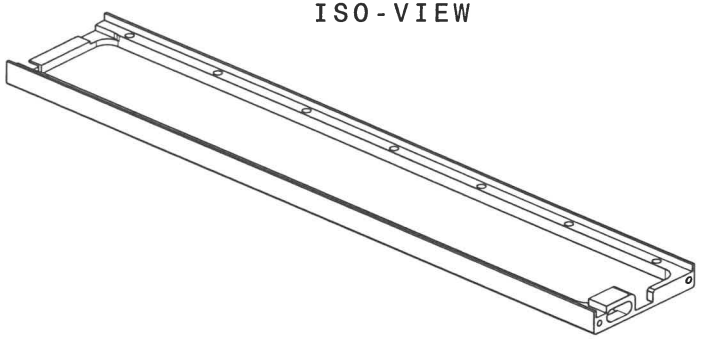

SURFACES WITHOUT ANODIZING ACCORDING TO NOTE 4.

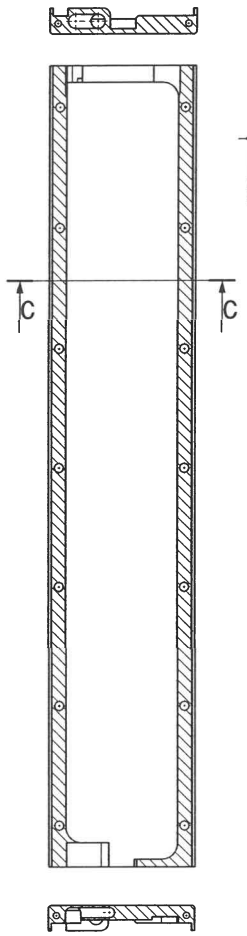

C - C

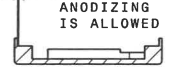

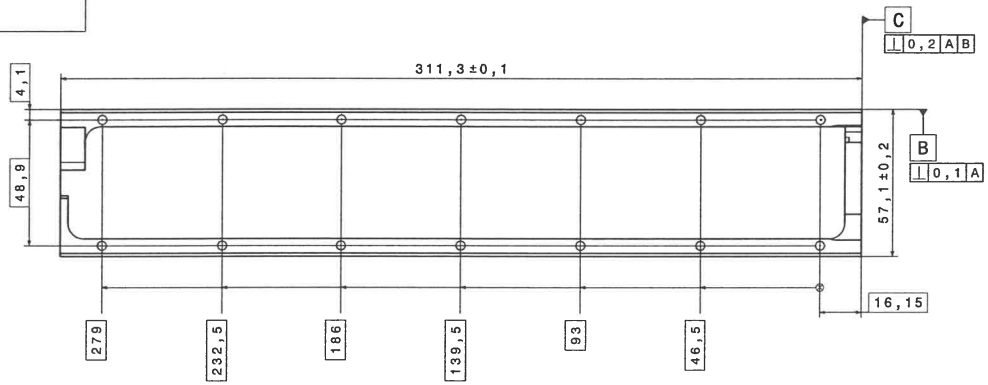

B - B

Scale: 2:1

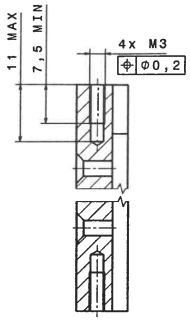

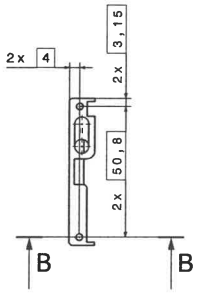

A - A

Scale: 2:1

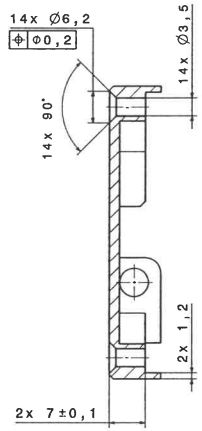

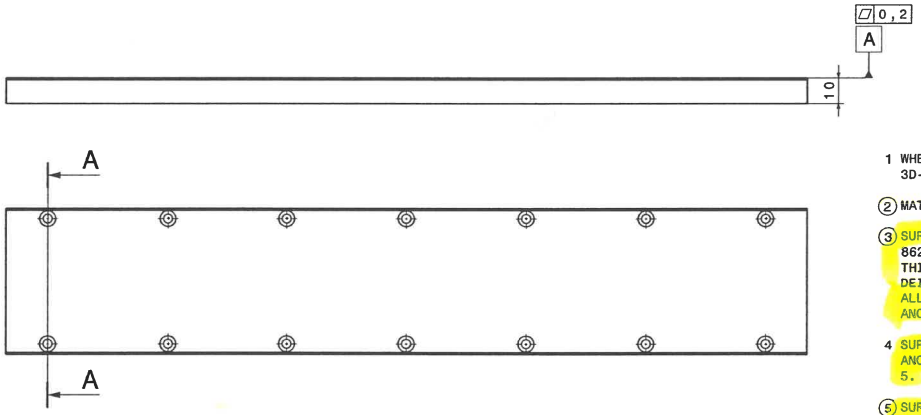

1 WHERE OTHERWISE NOT STATED, DIMENSIONS ACCORDING TO 3D-MODEL IN DOCUMENT LIST, TOLERANCE: ⌓ 0,3 A B C

2 MATERIAL: ALUMINIUM EN-AW 6082-T6 OR T651.

3 SURFACE TREATMENT: SULPHURIC ACID ANODIZING PER MIL-A-8625 OR STD 1978, TYPE II CLASS 2 - BLACK, THICKNESS 15±5µm HYDROTHERMALLY SEALED IN HOT DEIONIZED WATER.
ALL HOLES MASKED AND FREE FROM SULPHURIC ACID ANODIZING.

4 SURFACES MARKED ▨ SHALL BE FREE FROM SULPHURIC ANODIZING AND HAVE SURFACE TREATMENT ACCORDING TO NOTE 5.

5 SURFACE TREATMENT: TCP (TRIVALENT CHROMIUM PRETREATMENT). IN ACCORDANCE WITH MIL-DTL-5541 TYPE II CLASS 3.

6 NOT CLAMP MARKS ON SURFACES MARKED: ——·——·——

General requirements unless otherwise specified:			Company confidentiality: COMPANY RESTRICTED	
General tolerance: -	Tolerances ISO 2768: m	Tolerance threads: 6h-6H	Sign: u060054 / Year-Month-Day: 2023-11-06	
Tolerance angles: -	Break sharp edges: 0,1-0,3	Fillet radius: MAX 0,3	Scale: 1:1 / Project: -	
Surface roughness: Ra 3,2	Surface treatment: 3 5	Material: 2	Title: BOTTOM COVER	A / 8-48082 / 2345
			Drawing number: R-30004756-002	Sheet: 1/1