GENERAL TOLERANCES
Angular dimension +-1° - Roundness range of tolerance from IT4 to IT11. Must be contained within half of dimensional tolerance.
MACHINED holes H14 shafts h14 linear values Js14 -- ROUGH holes H16 shafts h16 linear values Js16
SHEETS cutting/laser cutting/punching Js13 holes H13 bending/pressing Js14 -- ALUMINIUM DIE CASTING Savio Norm 4011_1005_00
PLASTIC MATERIALS according to DIN 16901 -- CAST IRON Savio Norm 4011_1003_00
The general tolerances for ROUGH of plastic (DIN 16901) of aluminium (4011_1005_00), of CAST IRON (4011_1003_00), must be intended H for holes, h for shafts, Js for all the other dimensions

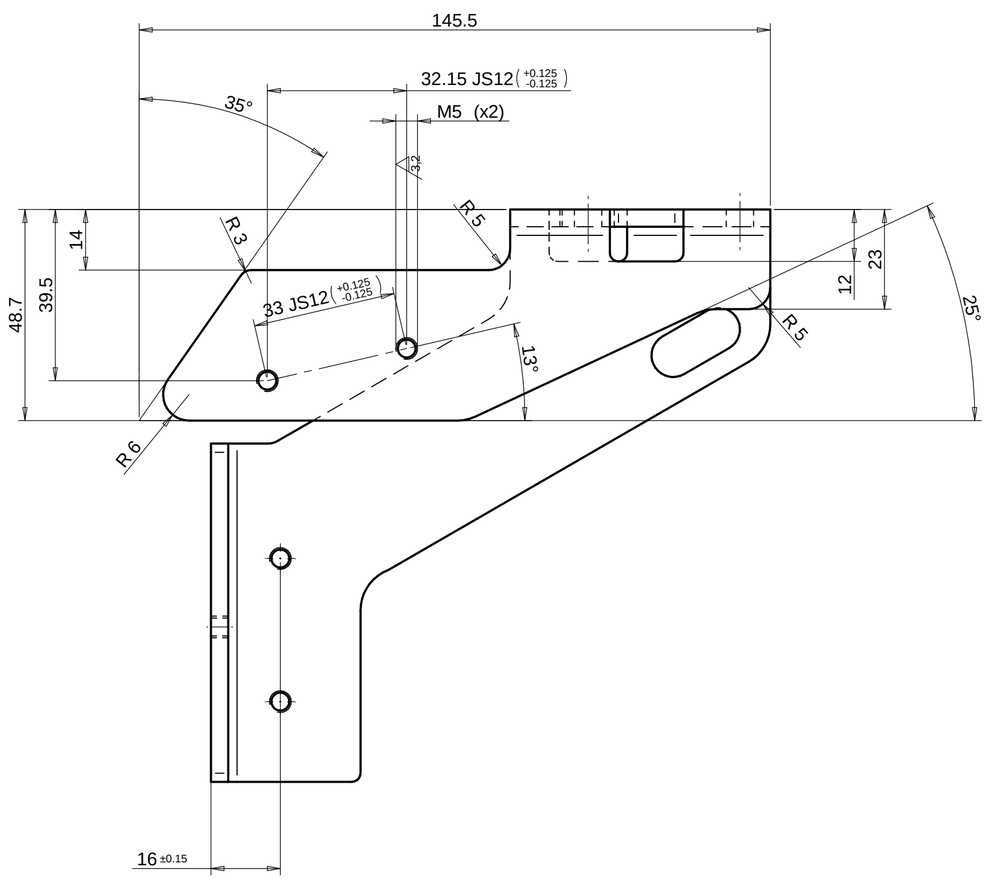

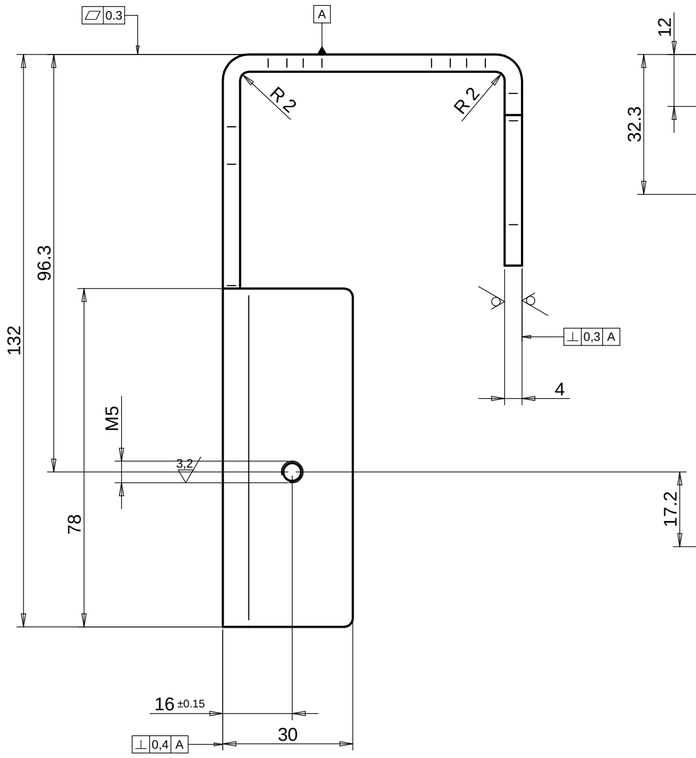

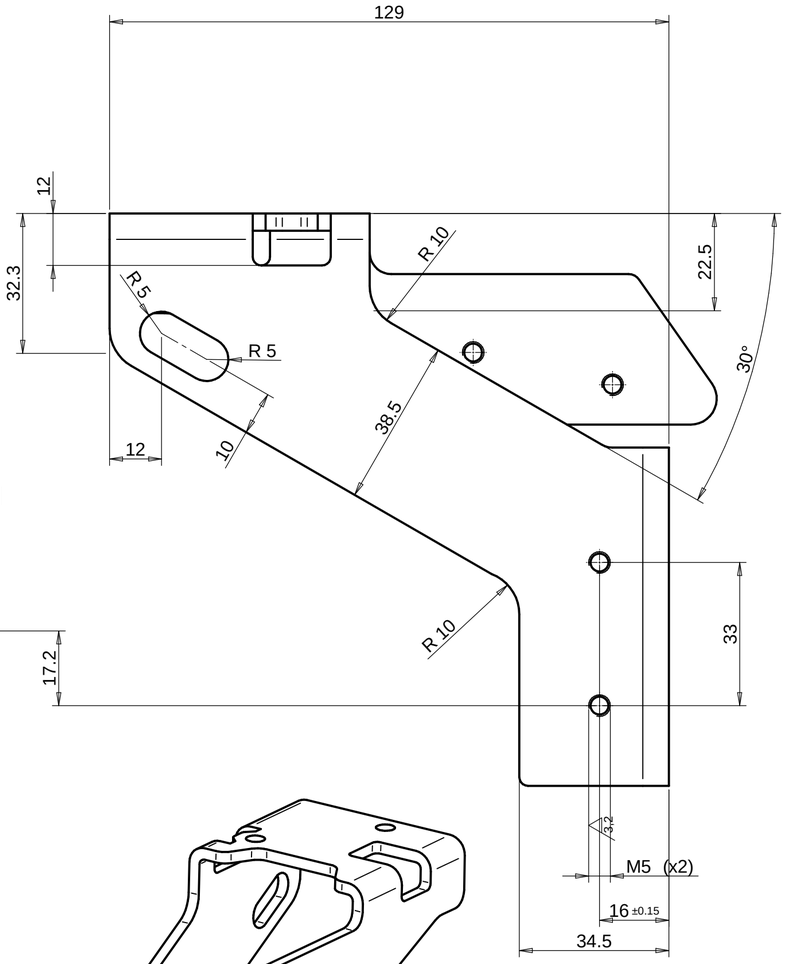

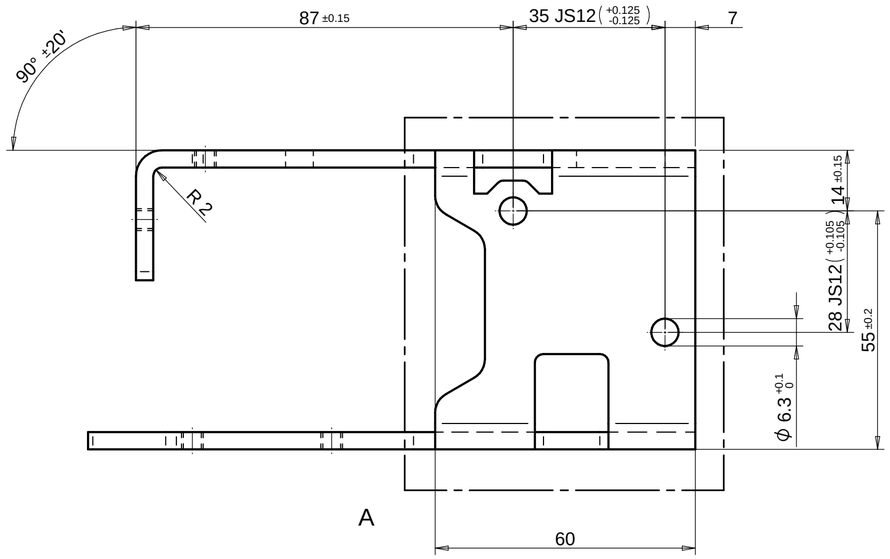

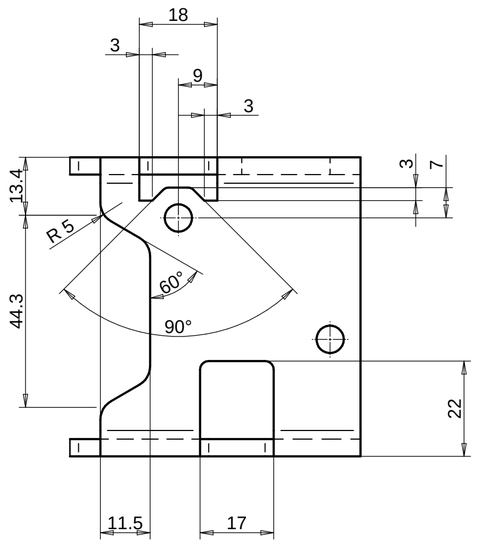

DET./Part. A

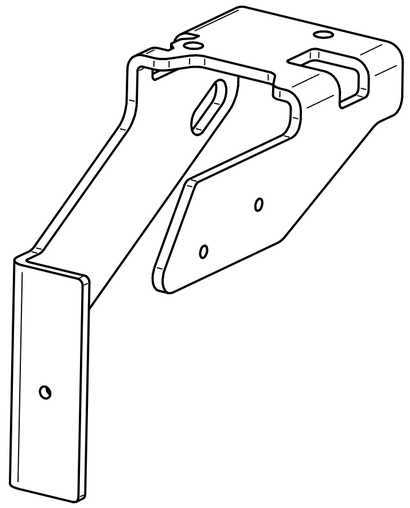

6,3 (3,2) BAVA MAX. / MAXIMUN BURR : 0,04 mm
RAGGI NON QUOTATI / BENDIGN WITHOUT DIMENSION: R=2 mm

CN06594			22/05/2023 | 00
Change	Modification details ☐:		Date Mod: | IRP
Changes to previous release △:		Obtain from:	Substitute: 038494.1.0
Material:	DC01+A-G UNI EN 10130	Code:	4032_6152_99
Supply state:	+A-G: SURFACE A FINISHING G	Dimensions:	
Thermic treat.:		Hardness(T):	
Surface treat.:	Fe/Zn 8÷12 A HP UNI ISO 2081 free Cr VI	Hardness(S):	
Weigth:	0.5 kg	Volume: 62048.47 mm^3	

Approved

DENOMINATION: SUPPORTO SMARTBOOSTER PROXIMA E/I

SAVIO	Draw.: Nicolas Andreoni	Date: 31/01/2023	055538.0.0
	Mod.: Carmine Barbarito	Sheet N°: 1/1	
	App.: Stefano Malfante	Scale: 1:1	BRACKET

Reserved property of SAVIO MACCHINE TESSILI S.p.A. In accordance with the law, the contents of this drawing may not be re-produced or communicated to third parties.