Original format size A1

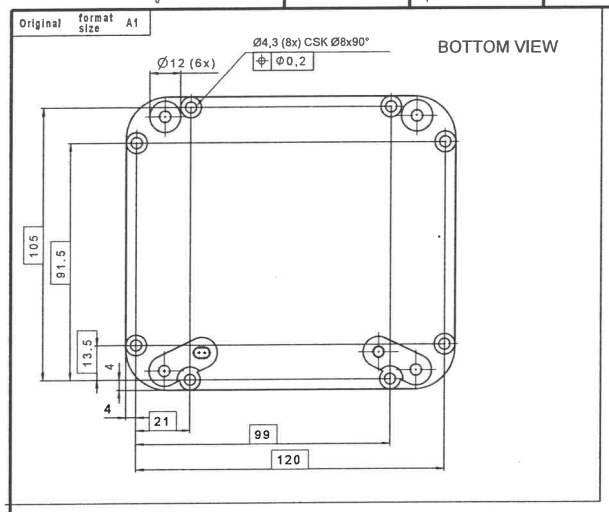

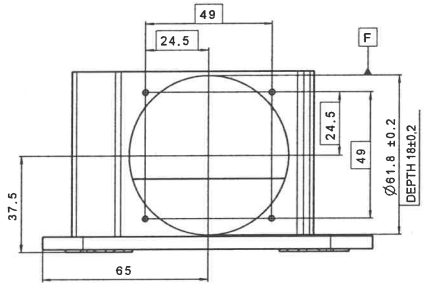

Isometric view
Scale: 1:1

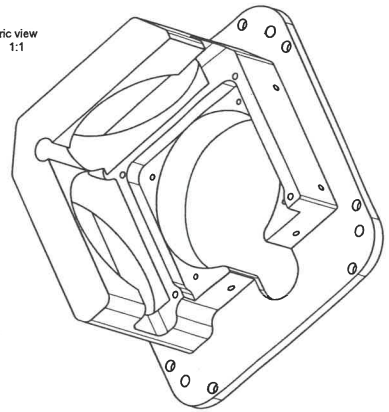

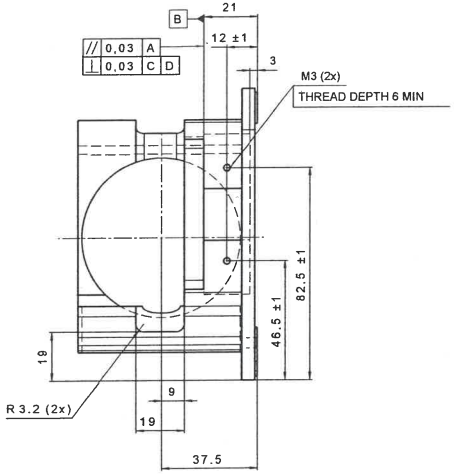

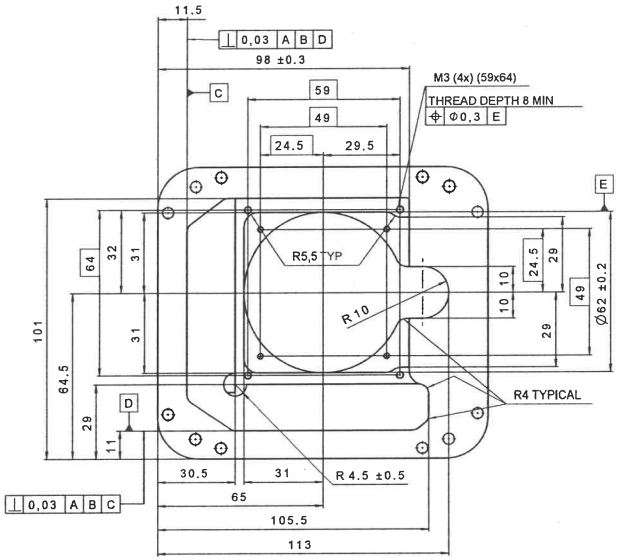

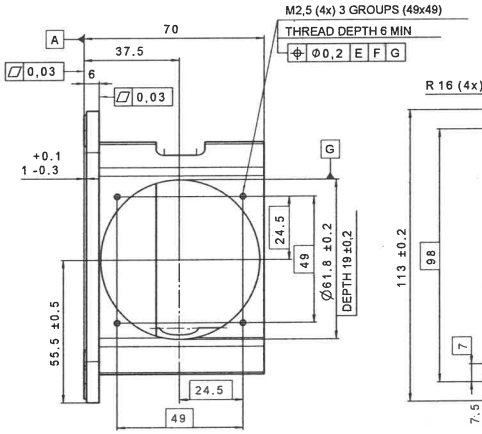

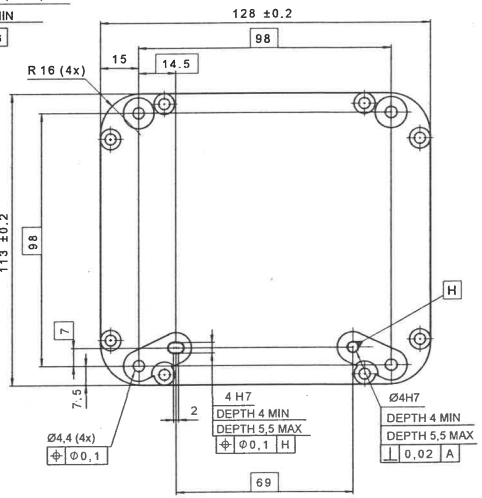

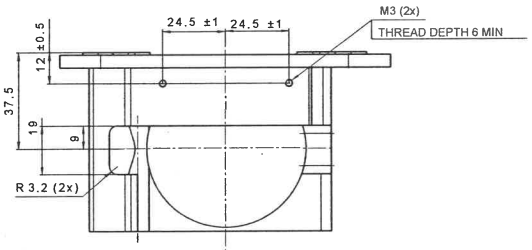

NOTER / NOTES:

1. MATERIAL: ALUMINIUM EN-AW 7075-T651 OR AA 7075-T651
2. YTBEHANDLING / SURFACE TREATMENT TCP (Trivalent Chromium Pretreatment)
   IN ACCORDANCE WITH MIL-DTL-5541 TYPE II CLASS 3
   REF. TRADEMARKS: SURTECH 650 OR CHROMITAL TCP

3 EJ ANGIVNA MÄTT ENLIGT 3D MODELL
/ NOT GIVEN DIMENSIONS IN ACCORDANCE WITH 3D MODEL.

PREMEK HI TECH s.r.l.
Via J. Linussio, 3/5
33170 PORDENONE
P.IVA 01114050931

Generella tol: ISO nj angivet angivet / Unless otherwise specified		Sekretess/ Classification	Company Restricted
Tolerensfält stDimensions	Tolerensfält ISO 2768-1	Tolerensfält gängor/threads	6H-6H
±0,1			
Tolerans Vinklar/Angles	Skarpa kanter Brytes/Break sharp edges		
±1°	0,1-0,3		
Ytjämnhet/ Surface rough	Ytbehandling/ Surface treat	Material	
Ra 3,2	②	①	

Ritad/Drawn	STANDN	Datum/Date (ÅÅÅÅ-MM-DD)	2010-04-15
Skala/Scale	1:1	Classification export control: Not export controlled	
Projekt/Project	FCG		
Benämning/Name	GYRO HOUSING		

B	8-44849	1733
A	8-41845	1015

Utfärdat av/Drawn by: AD
Utfärdat av/EC0 no: 1JAN01 11:00

Ritningsnr/Drawing no: R-8088100-061

Blad/Sheet: 1/1

Detta dokument utlånas till
Det kopierat/stulet av .....