KLIPPAN	CAD					
REV	DATE	PLAC	DESIGN CHANGE LEGEND: T=ADDED U=DELETED V=WAS	DRAWN	CHECK	APPR
1	210902	A1	General update	JVN	ANA	DRN

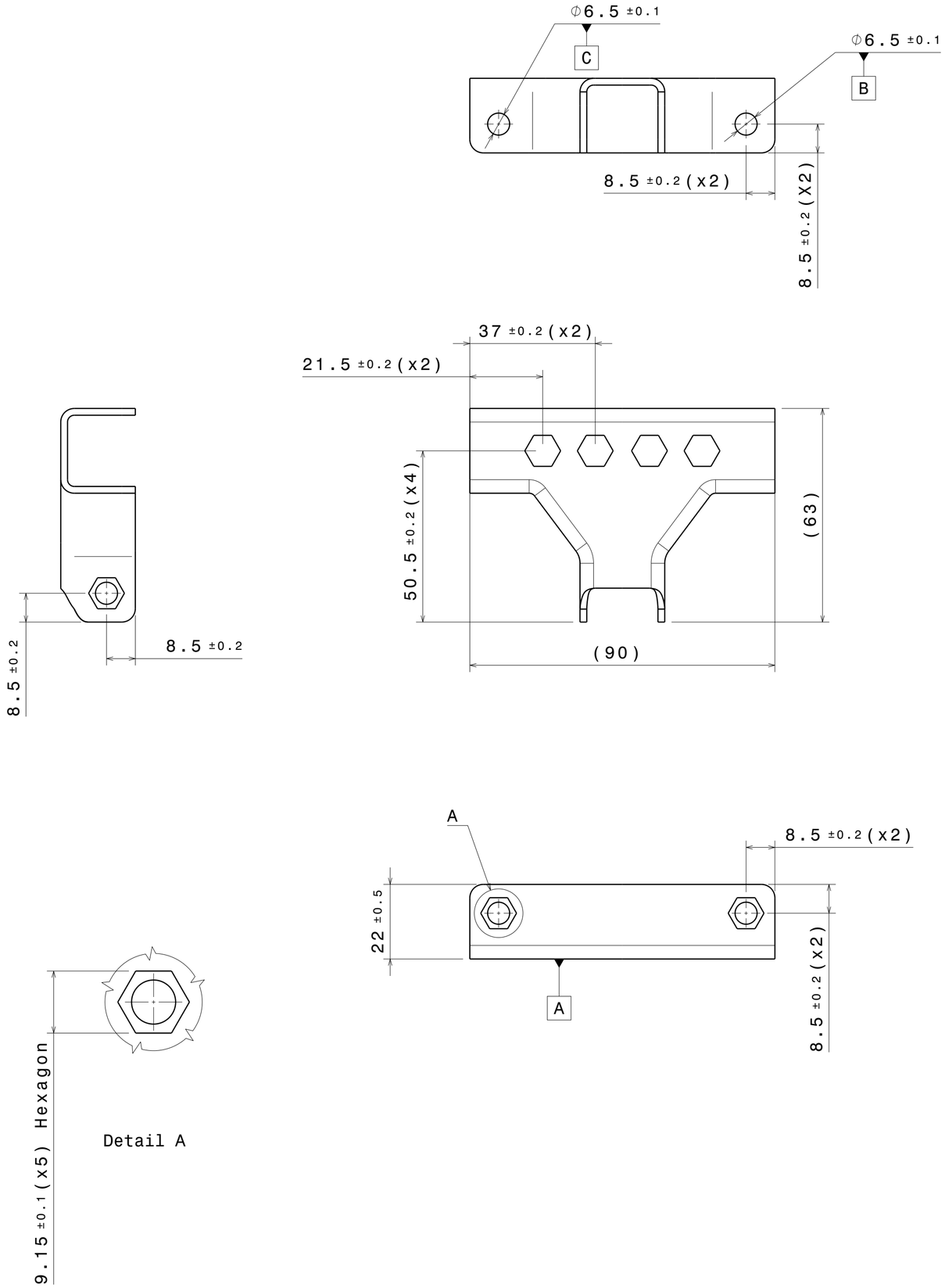

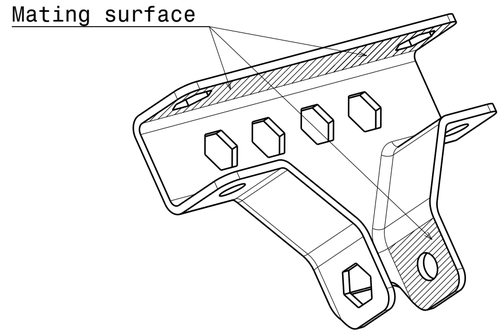

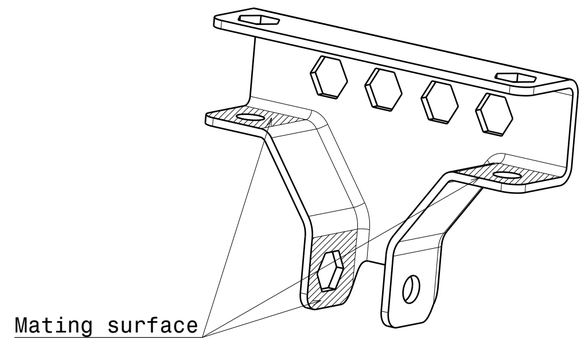

- General geometric tolerances
  - Mating surface ⌓ 1 A B C
  - Other surface ⌓ 3 A B C
  - Holes ⌖ ⌀1 A B C
  - Cut edges ⌒ 1.5 A B C
- Tolerances refers to coated part
- Material thickness: 2mm
- Surface treatment: CDP M3078-2
- Corrosion protection acc to: M3018-2-G
- Max burrs +0.3mm
- Where dimensions are excluded refer to 3D model
- Product Characteristics Classification:
  - (CC) Critical Characteristics
  - (SC) Significant Characteristics

KLIPPAN SAFETY AB
Due to national law of Copyright this work is protected against any kind of use without permission from KLIPPAN SAFETY AB

KLIPPAN SAFETY AB			
MATERIAL EN 10149-2 S420MC (1.0980)			
SURFACE SEE NOTE			SCALE 1:1
TITLE T_BRACKET			A2/C
WEIGHT -	GENERAL TOLERANCE -	SHEET 1/1	EO -
DRAWN TFB	DATE 210107	DRAWING NO. T_BRACKET	PHASE B / REV 1
REF.DRW -			

2013.08 FRAME A2