GENERAL TOLERANCES
Angular dimension +-1° - Roundness range of tolerance from IT4 to IT11. Must be contained within half of dimensional tolerance.
MACHINED holes H14 shafts h14 linear values Js14 -- ROUGH holes H16 shafts h16 linear values Js16
SHEETS cutting/laser cutting/punching Js13 holes H13 bending/pressing Js14 -- ALUMINIUM DIE CASTING Savio Norm 4011_1005_00
PLASTIC MATERIALS according to DIN 16901 -- CAST IRON Savio Norm 4011_1003_00
The general tolerances for ROUGH of plastic (DIN 16901) of aluminium (4011_1005_00), of CAST IRON (4011_1003_00), must be intended H for holes, h for shafts, Js for all the other dimensions

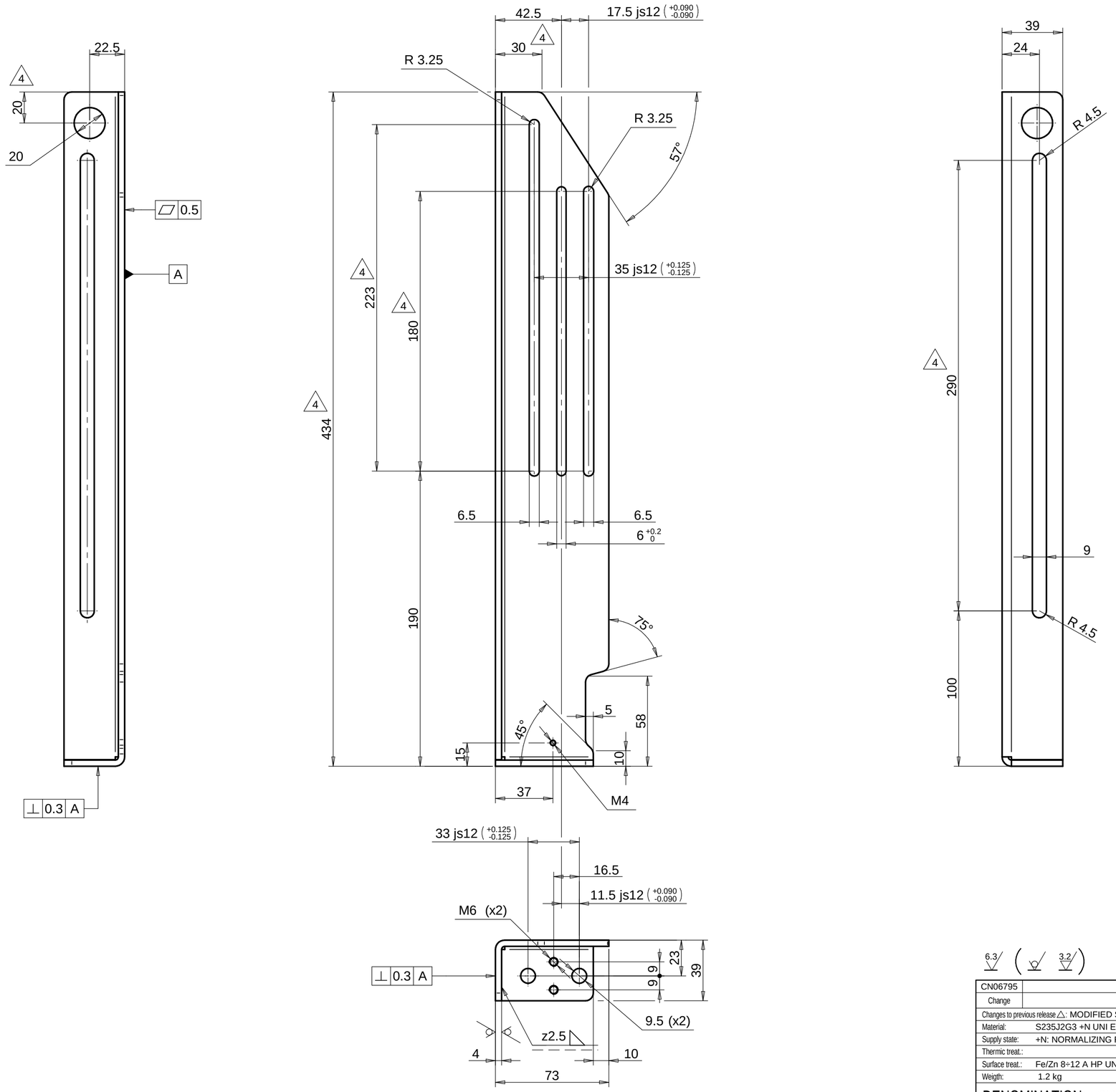


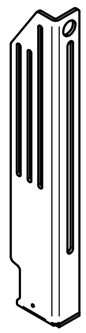

- BAVA MAX 0,04
- MAXIMUM BURR

- FORI FILETTATI RUGOSITÀ : 3.2
- THREADED HOLES ROUGHNESS

- RAGGI INTERNI DI PIEGA R=2.5
- INTERNAL BENDING RADIUSES

- RACCORDI NON QUOTATI R5
- FILLETS WITHOUT DIMENSION

6.3 (3.2)

| | | | |
|---|---|---|---|
| CN06795 | | | 16/06/2023 00 |
| Change | Modification details ☐: | | Date Mod: IRP |
| Changes to previous release △: MODIFIED SHAPE F7 AREA | | Obtain from: | Substitute: 038614.3.0 |
| Material: | S235J2G3 +N UNI EN 10025 | Code: | 4032_6002_99 |
| Supply state: | +N: NORMALIZING ROLLING | Dimensions: | |
| Thermic treat.: | | Hardness(T): | |
| Surface treat.: | Fe/Zn 8÷12 A HP UNI ISO 2081 free Cr VI | Hardness(S): | |
| Weigth: | 1.2 kg | Volume: 155210.30 mm^3 | |

Approved

DENOMINATION: SUPPORTO CONTROPUNTA E PIEDINO

| | | | |
|---|---|---|---|
| SAVIO | Draw.: Enrico Gaiotto | Date: 18/04/2023 | 038614.4.0 |
| | Mod.: Enrico Gaiotto | Sheet N°: 1/1 | |
| | App.: Stefano Malfante | Scale: 1:2 | BRACKET |

Reserved property of SAVIO MACCHINE TESSILI S.p.A. In accordance with the law, the contents of this drawing may not be re-produced or communicated to third parties.