GENERAL TOLERANCES
Angular dimension +-1° - Roundness range of tolerance from IT4 to IT11. Must be contained within half of dimensional tolerance.
MACHINED holes H14 shafts h14 linear values Js14 -- ROUGH holes H16 shafts h16 linear values Js16
SHEETS cutting/laser cutting/punching Js13 holes H13 bending/pressing Js14 -- ALUMINIUM DIE CASTING Savio Norm 4011_1005_00
PLASTIC MATERIALS according to DIN 16901 -- CAST IRON Savio Norm 4011_1003_00
The general tolerances for ROUGH of plastic (DIN 16901) of aluminium (4011_1005_00), of CAST IRON (4011_1003_00), must be intended H for holes, h for shafts, Js for all the other dimensions

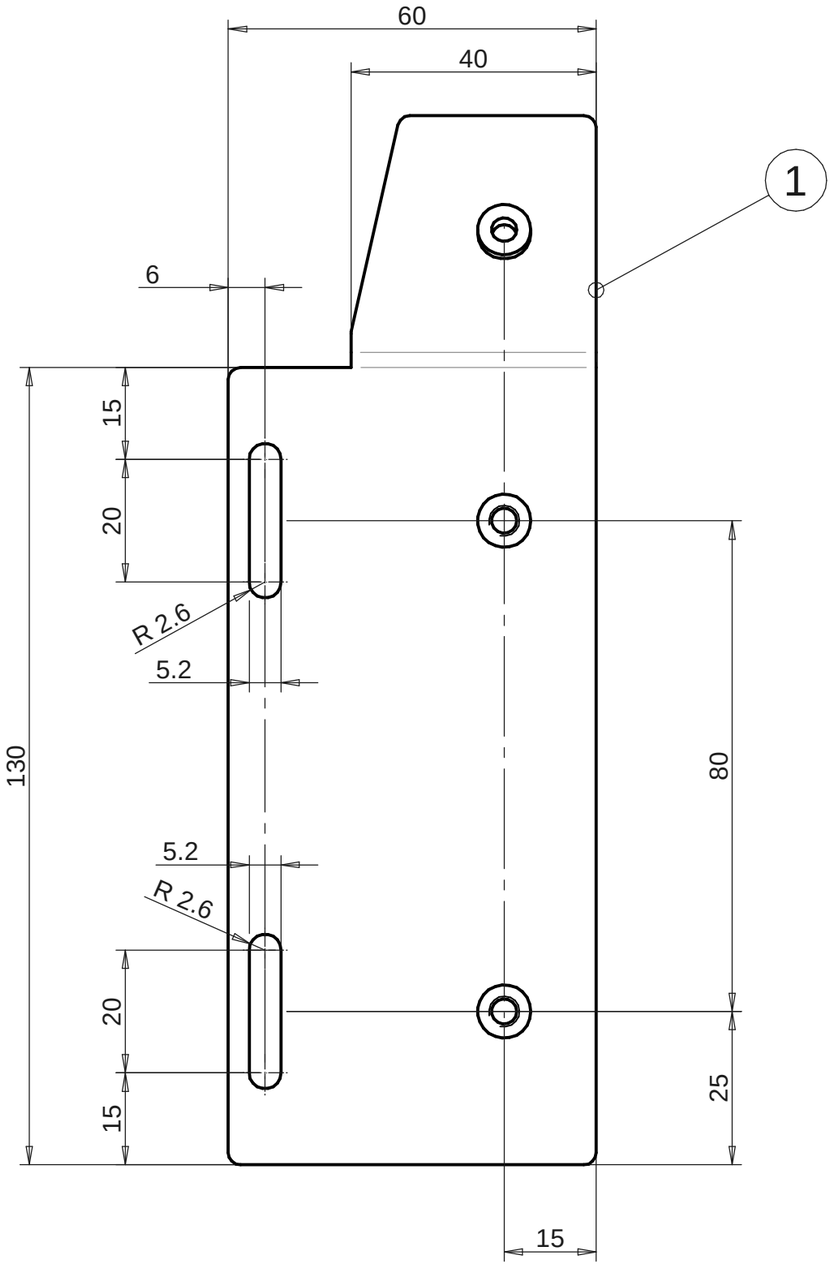

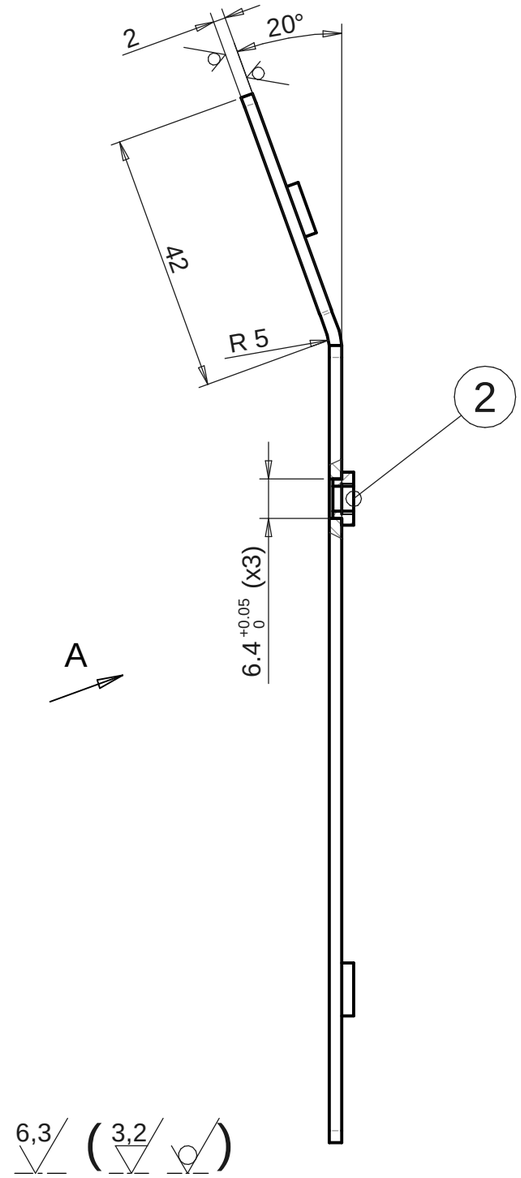

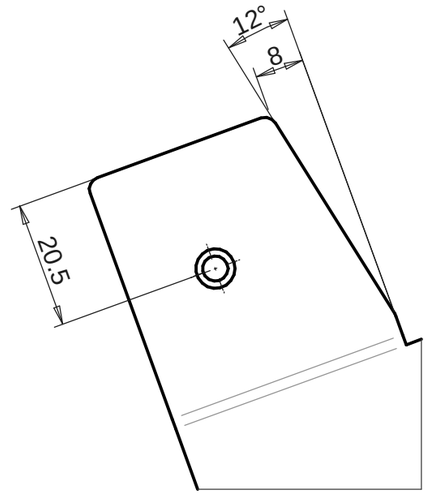

VIEW/Vista A

- BAVA MAX 0,15
- MAXIMUM BURR

- RACCORDI NON QUOTATI R2
- FILLETS WITHOUT DIMENSION

2	4026_6127_17	3	INSERT	Pressure nuts M5 Thic.1.4 FeZn8c1A	M5x8,7x2
1	058766.0.A	1	WELDED COMPONENT	S235J2G3 +N UNI EN 10025	
POS.	Code	Q.ty	Description	Technical Description	

CN06902		10/10/2023	00
Change	Modification details ☐:	Date Mod:	IRP
Changes to previous release △:	Obtain from:	Substitute:	
Material:	Code:		
Supply state:	Dimensions:		
Thermic treat.:	Hardness(T):		
Surface treat.: Fe/Zn 8÷12 A HP UNI ISO 2081 free Cr VI	Hardness(S):		
Weigth: 0.1 kg	Volume: 18407.25 mm^3		

DENOMINATION: SUPPORTO PETTINE MC.SX

SAVIO

Draw.: Enrico Gaiotto	Date: 03/10/2023	058766.0.0	
Mod. : Enrico Gaiotto	Sheet N°: 1/1		
App. : Stefano Malfante	Scale: 1:1	SUPPORT	

Reserved property of SAVIO MACCHINE TESSILI S.p.A. In accordance with the law, the contents of this drawing may not be re-produced or communicated to third parties.