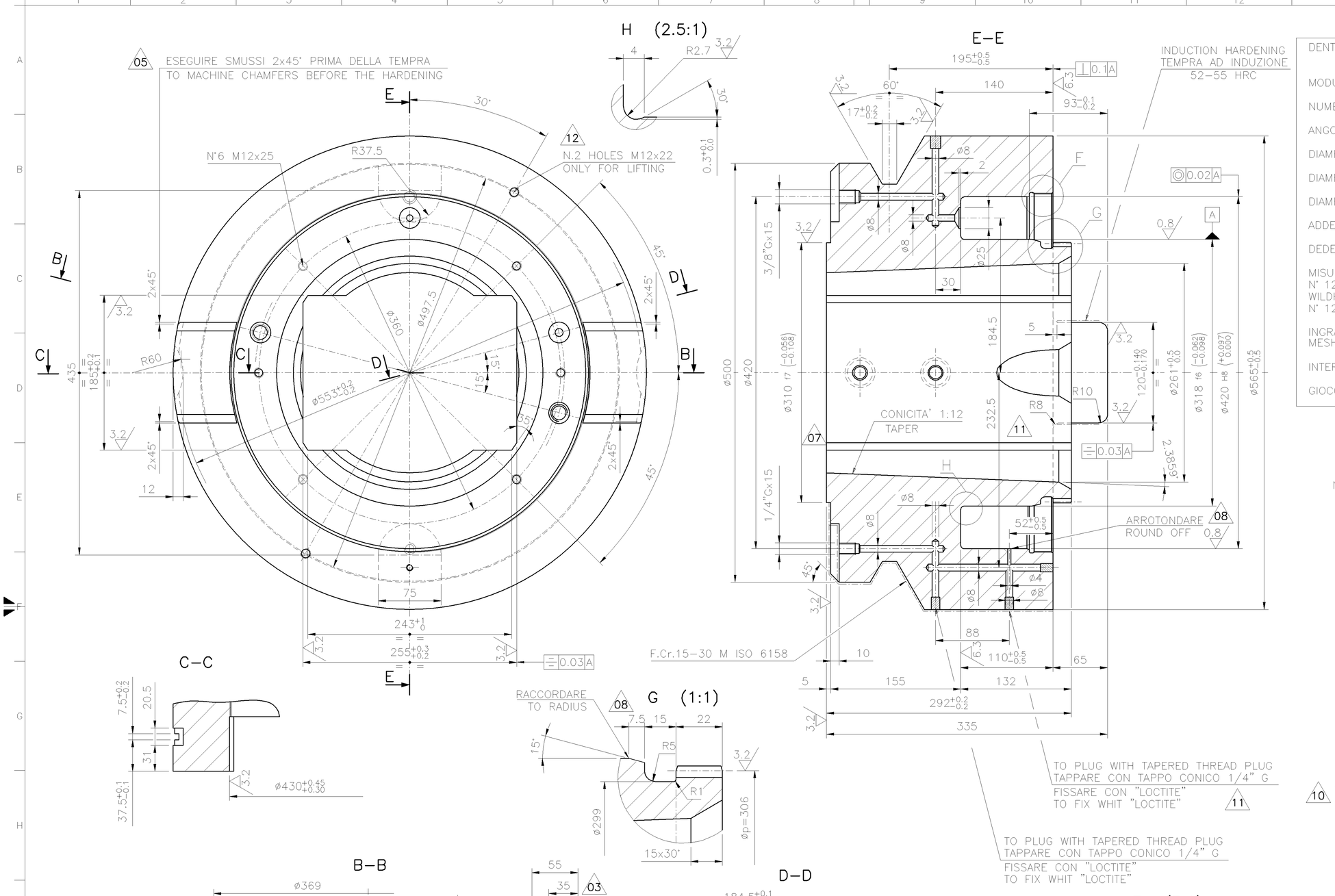

DENTATURA CILINDRICA DIRITTA RIBASSATA INT.
DEPRESSED STREIGHT GEAR

MODULO NORMALE–NORMAL MODULE	Mn =	3
NUMERO DI DENTI–NUMBER OF TEETH	Z =	102
ANGOLO DI PRESSIONE–PRESSURE ANGLE	α =	20°
DIAMETRO PRIMITIVO–PITCH DIAMETER	øp =	306
DIAMETRO ESTERNO–OUTSIDE DIAMETER	øe =	310.8
DIAMETRO INTERNO–INTERNAL DIAMETER	øi =	300
ADDENDUM = 0.8 x M	a =	2.4
DEDENDUM = 1.25 x a	b =	3
MISURA WILDHABER NOMINALE SU N° 12 DENTI / WILDHABER NOMINAL MEASURE ON N° 12 TEETHS	W =	106.134 / 105.984 / 105.884
INGRANA CON PARTICOLARE / MESHES WHIT DETAIL	DIS. N° / DWG. N°	4.363818.F–28.A
INTERASSE–CENTER DISTANCE	I =	0
GIOCO SUI FIANCHI–SIDE CLEARANCE	j =	0.3÷0.5 (10)

N.B.: ARROTONDARE GLI SPIGOLI INTERESSATI AL TRATTAMENTO DI TEMPRA.
ALL HARDENED EDGES MAST BE RADIATED.

Rev.	Date	Revisions description	Drawn by	Checked by	Approved by
12	16 May 2019	ADDED LIFTING HOLES	Coseano L	Martinel P	
11	25 Jan 2012	MODIFIED THREAD G 1/4 WAS G 1/8 AND R 8 WAS R6	Tosolini M	Vinetti D	
10	10 Sep 2011	MOD. MATERIALE+ ELIMINATO NOTA FUCINATI+AGG. GIOC. SUI FIANCHI MAT.MOD.+ ELIM. FORG. NOTE+UPDATED SIDE CLEARENCE	Oaida O	Carletti Y	
09	28 Jul 1997	REVISONED MATERIAL	Moratti	Mazzolo	
08	21 Nov 1996	ADDED NOTE; DIMENSION 7.5 WAS 8	Vergendo	Cattelan	
00	1 Feb 1994	EMISSIONE / ISSUED	Condusso	Cattelan	

Material 1 (where not indicated on drawing)	State of supply Mat.1	Danieli Supply Std. 2.8.032	Supply Class B	Pattern DB
Material 1: C40E EN 10083-2				
Material 2	State of supply Mat.2	Danieli Supply Std.	Supply Class	Casting Code
Material 1 Equivalent				

Heat Treatment	BONIFICA+TEMPRA IND.&RINV. DUREZZA A CUORE 210–250 HB	DUREZZA SUPERFICIALE 52–55 HRC SPESSORE EFFICACE MIN 02.00 MM
On Drawing Symbol, if required, ----	QUENCH.&TEMP.+IND.HARD.&TEMP. CORE HARDNESS 210–250 HB	SURFACE HARDNESS 52–55 HRC EFFECTIVE DEPTH MIN 02.00 MM
Coating	CROMATURA	F.Cr – UNI ISO 6158 015–030 micron Tipo M
On Drawing Symbol, if required, ----	CHROMIUM PLATING	F.Cr – UNI ISO 6158 015–030 micron Type M

Unquoted radius	Unquoted bevels	Dimensions without tolerance as per	Machining	Prec.Class	Max. Welding Class
0.8 (mm)	1X45° (mm)	DANIELI STD 2.4.103	12.5 / 6.3 / 3.2 / 0.8	C	

Project Name

DANIELI MORGÅRDSHAMMAR

Job nr
Obtained from 4.163622.T
Replaces

Family code/Machine code 40742
Weight (Kg) 300
J (Kgm²)

Title: CAP FOR ROLLING RING

Scale 1:2.5
Format A1
Nr. of sheets 001
Sheet 001 Follow

DANIELI Shop number: 4.363826.Z
Revision 12
DANIELI dwg number
Revision

According to law DANELI & C. SpA considers this document to be a company secret and therefore prohibits any person to reproduce or disclose it or make it known in whole or in part to other parties or to competitors without specific written authorization of DANIELI's Management

File nr 4363826Z_001

COMPUTER AIDED DESIGN –A