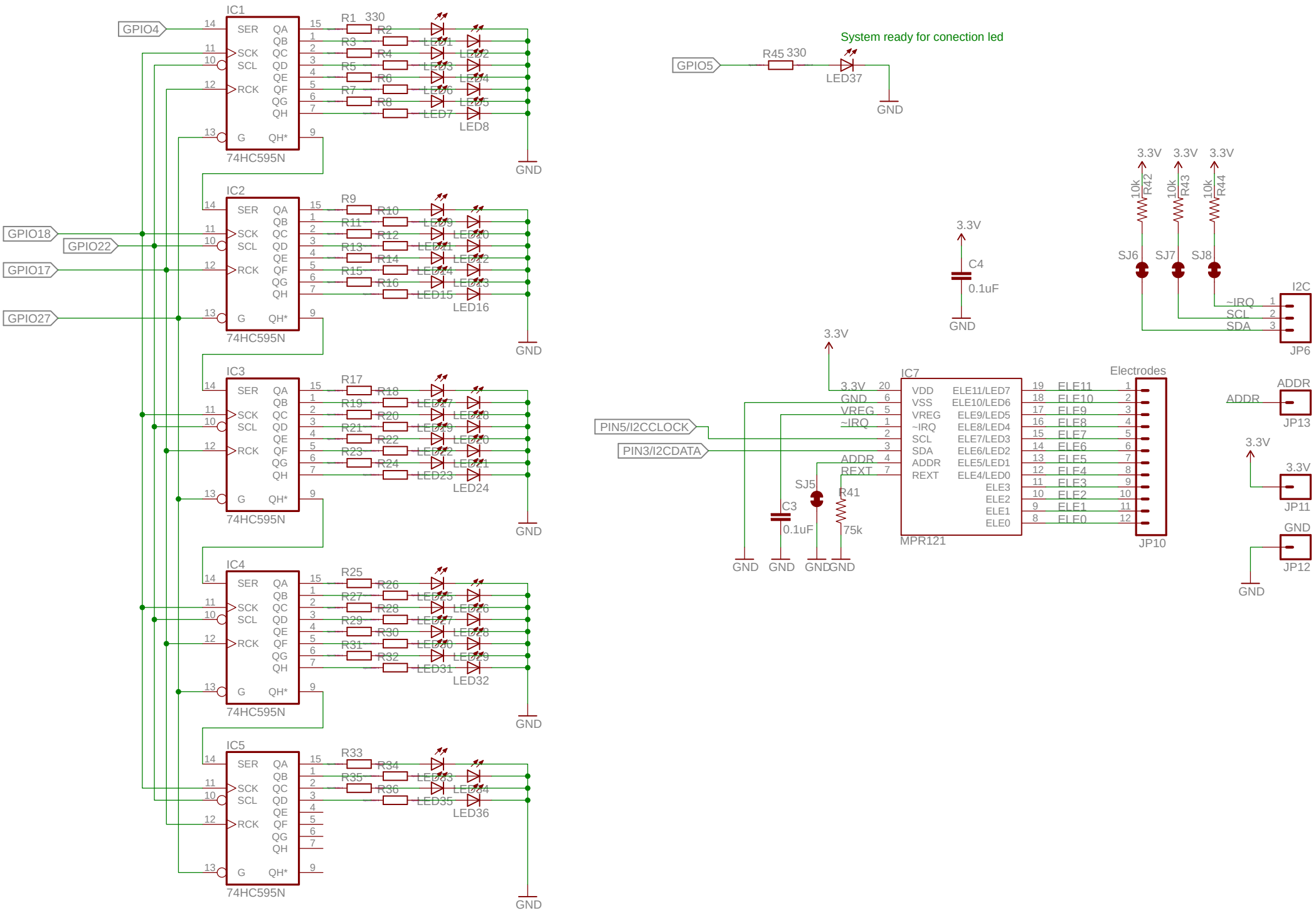
IC1
IC2
IC3
IC4
IC5
74HC595N
SER
SCK
SCL
RCK
G
QA
QB
QC
QD
QE
QF
QG
QH
QH*
GPIO4
GPIO18
GPIO22
GPIO17
GPIO27
GND
R1 330
System ready for conection led
GPIO5
R45 330
LED37
3.3V
C4
0.1uF
10k R42
10k R43
10k R44
SJ6
SJ7
SJ8
I2C
~IRQ
SCL
SDA
JP6
IC7
MPR121
VDD
VSS
VREG
~IRQ
SCL
SDA
ADDR
REXT
ELE11/LED7
ELE10/LED6
ELE9/LED5
ELE8/LED4
ELE7/LED3
ELE6/LED2
ELE5/LED1
ELE4/LED0
ELE3
ELE2
ELE1
ELE0
Electrodes
JP10
PIN5/I2CCLOCK
PIN3/I2CDATA
SJ5
R41
75k
C3
0.1uF
ADDR
JP13
JP11
JP12