Op-Amp Analog Signal Processing Circuits

Spoorthi Yellamanchali

March 2025

1 Custom Weighted Summing and Difference Amplifier

Objective

- To design and implement a custom-weighted summing and difference amplifier using operational amplifiers, which allows for precise amplification and combination of multiple input signals with specific weighting factors.
- The circuit should be capable of performing both summation and subtraction of input voltages while maintaining signal integrity and minimizing distortion, making it suitable for applications such as signal processing, sensor interfacing, and analog computing.
- This application implements the mathematical functions:
  - $> V_{out} = 2V_1 + V_2 - V_3$
  - $> V_{out} = 2V_1 - V_3$
- The circuit should ensure accurate signal processing while maintaining signal integrity and minimizing distortion.

Components

- Op-amp (LM358).
- Resistors (carefully selected for weighting)(Here we need $10\,\Omega$) Resistors.
- DC power supply.
- Function generator (for input signals).
- Oscilloscope.

Pin configuration of LM 358

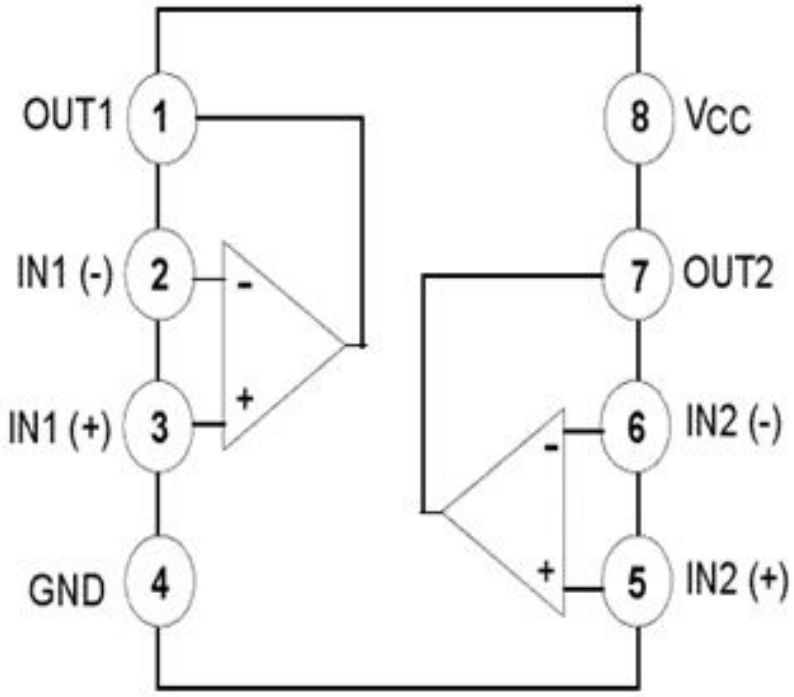

Circuit Configuration

- The following is the circuit configuration for equation 1.

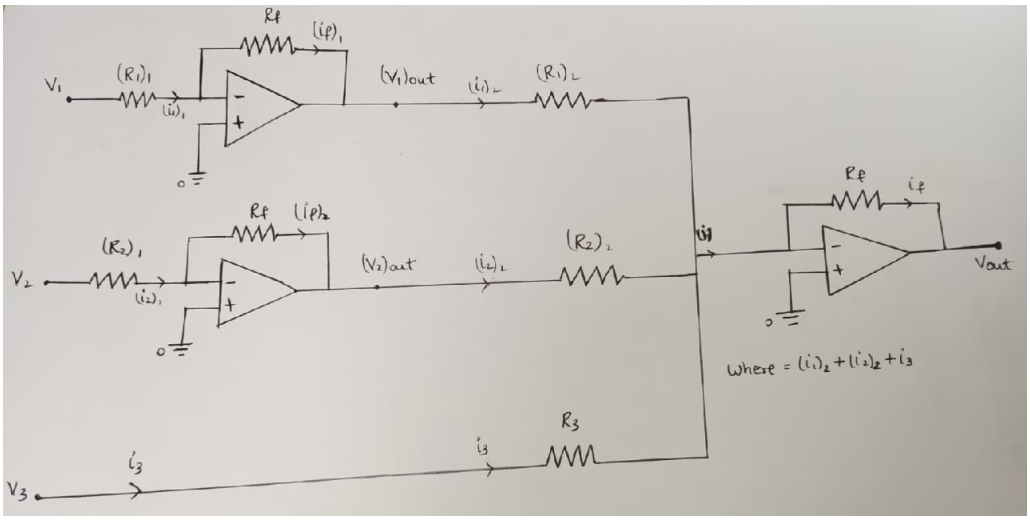

- The following is the circuit configuration for equation 2.

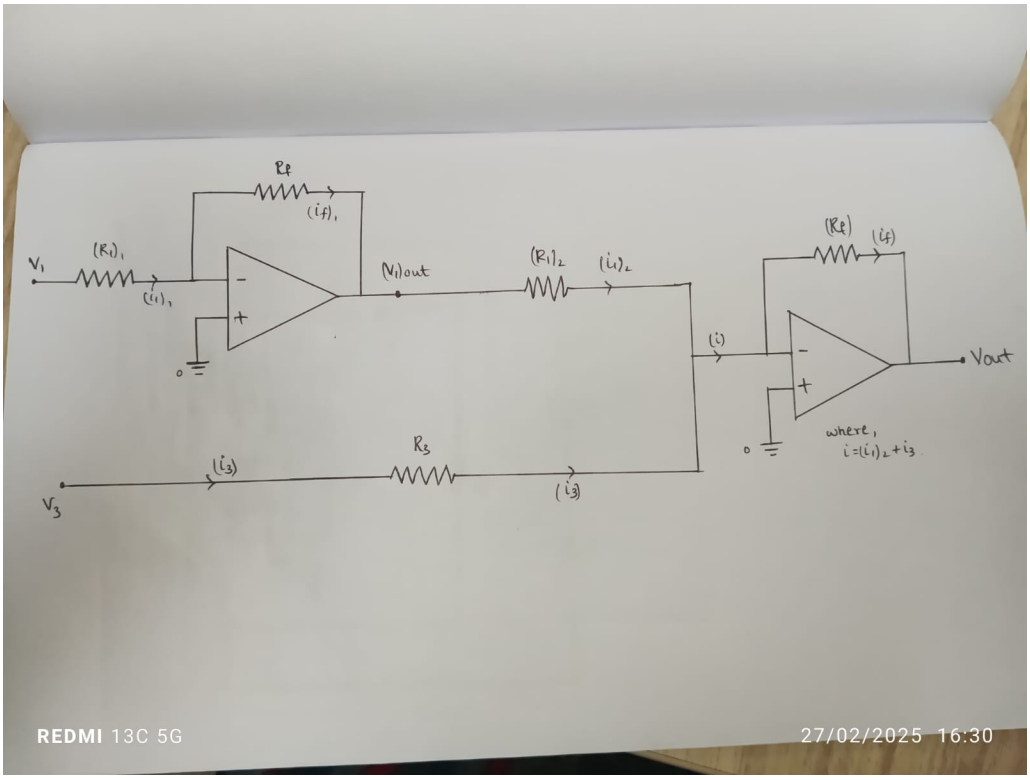

- Since we need a non-inverting input for V_1 and V_2 a combination of inverting and summing amplifiers is used.
- We need to choose the weights accordingly.
- By analysing the given mathematical functions we can state that the R_f value is $20\,\Omega$, R_{11} is $20\,\Omega$, R_{12} is $10\,\Omega$, R_{21} is $20\,\Omega$,R_{22} is $20\,\Omega$ and R_3 is $20\,\Omega$.
- Here R_f is the feedback resistance and R_{11},R_{12},R_{21},R_{22},R_3 are weighted input resistors.

Wiring Connections

- Here we use 2 LM358 devices i.e, 4 Operational Amplifiers of which only 3 of then are used in the wiring connections.
- We use one LM358 device to produce a non-inverting input for V_1 and V_2.
- We use the other one to get the final output.

Power supply to op-amp

We need to power supply $Vcc = +5V$ and $GND = -5V$ to op-amp due to the following reasons;

- The op-amp needs power to amplify signals; input alone is insufficient.
- The output is limited by the supply voltage (e.g., ±12V, 0V to 5V).
- Transistors, resistors, and current sources inside the op-amp require power.
- Proper Signal Processing and Ensures correct operation in linear mode and prevents undefined behavior.

The following are the wiring connections for Equation 1.

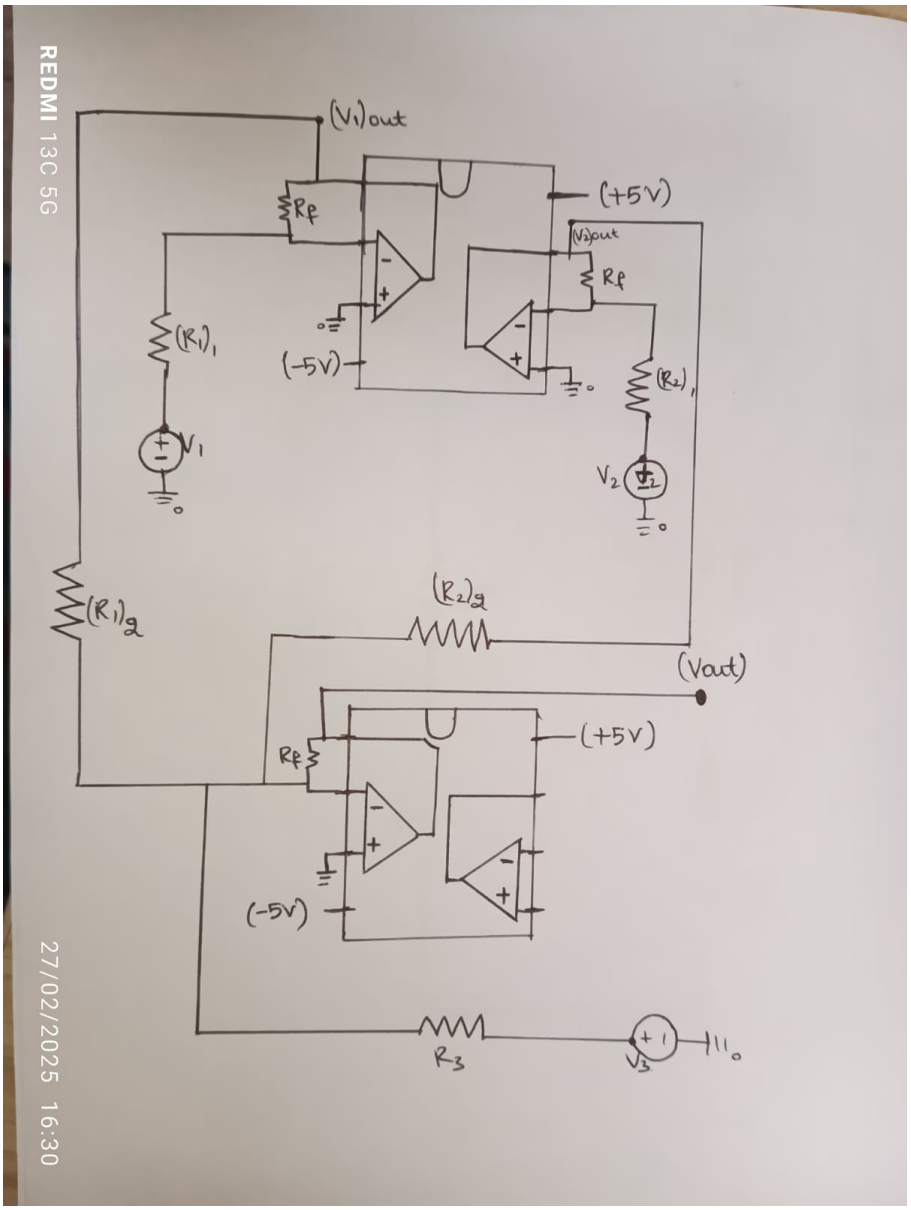

The following are the wiring connections for Equation 2.

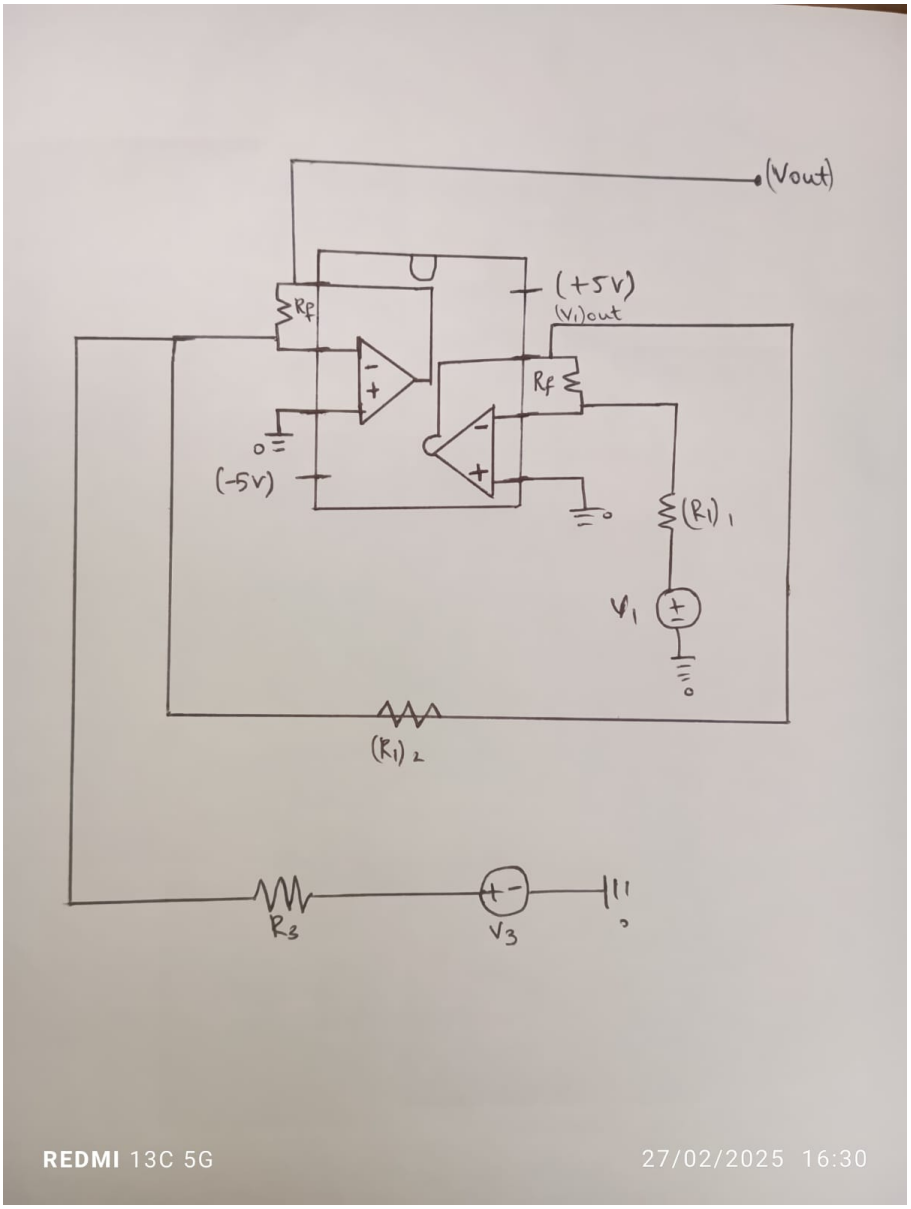

Theoritical Solution

Using an inverting summing amplifier;

$$V_{out} = -\left(V_1\frac{R_f}{R_1} + V_2\frac{R_f}{R_2} + V_3\frac{R_f}{R_3}\right) \tag{1.1}$$

values taken are:-

$$V_1 = 1V \tag{1.2}$$
$$V_2 = 2V \tag{1.3}$$
$$V_3 = 3V \tag{1.4}$$

1. $V_{out} = 2V_1 + V_2 - V_3$

From the circuit diagram the following equations are obtained using KCL and KVL.

$$i_{11} = i_{f_1} = i_{12} \tag{1.5}$$
$$i_{21} = i_{f_2} = i_{22} \tag{1.6}$$
$$i_{12} + i_{22} + i_3 = i = i_f \tag{1.7}$$
$$i_f = -\frac{V_{out}}{R_f} \tag{1.8}$$

From the equation 1.1;

$$\frac{V_1}{R_{11}} = -\frac{V_{1out}}{R_f} \tag{1.9}$$
$$V_{1out} = -\frac{V_1 R_f}{R_{11}} \tag{1.10}$$

Similarly, from equation 1.2

$$\frac{V_2}{R_{21}} = -\frac{V_{2out}}{R_f} \tag{1.11}$$
$$V_{2out} = -\frac{V_2 R_f}{R_{21}} \tag{1.12}$$

And for the last branch

$$i_3 = \frac{V_3}{R_3} \tag{1.13}$$

From equation 1.3

$$\frac{V_{1out}}{R_{12}} + \frac{V_{2out}}{R_{22}} + \frac{V_3}{R_3} = -\frac{V_{out}}{R_f} \tag{1.14}$$

Substituting the values of V_{1out} and V_{2out} and i_3 in the above equation (Here,$R_f = R_{11} = R_{21}$), we get;

$$V_{out} = V_1\frac{R_f}{R_{12}} + V_2\frac{R_f}{R_{22}} - V_3\frac{R_f}{R_3} \tag{1.15}$$

Substituting the values of R_f, R_{12}, R_{22}, R_3 in the above equation we get ;

$$V_{out} = 2V_1 + V_2 - V_3 \tag{1.16}$$

On substituting V_1, V_2, V_3, we get,

$$V_{out} = 1V \tag{1.17}$$

2. $V_{out} = 2V_1 - V_3$

From the circuit diagram the following equations are obtained using KCL and KVL.

$$i_{11} = i_{f_1} \tag{1.18}$$
$$i_{12} + i_3 = i = i_f \tag{1.19}$$
$$i_f = -\frac{V_{out}}{R_f} \tag{1.20}$$

From the equation 1.14;

$$\frac{V_1}{R_{11}} = -\frac{V_{1out}}{R_f} \tag{1.21}$$
$$V_{1out} = -\frac{V_1 R_f}{R_{11}} \tag{1.22}$$

And for the second branch

$$i_3 = \frac{V_3}{R_3} \tag{1.23}$$

From equation 1.15

$$\frac{V_{1out}}{R_{12}} + \frac{V_3}{R_3} = -\frac{V_{out}}{R_f} \tag{1.24}$$

Substituting the values of V_{1out} and i_3 in the above equation (Here,$R_f = R_{11}$), we get;

$$V_{out} = V_1 \frac{R_f}{R_{12}} - V_3 \frac{R_f}{R_3} \tag{1.25}$$

Substituting the values of R_f, R_{12}, R_3 in the above equation we get ;

$$V_{out} = 2V_1 - V_3 \tag{1.26}$$

On substituting, V_1, V_3, we get

$$V_{out} = -1V \tag{1.27}$$

Measuring the Output

- After the connections to operational Amplifier are made according to the figure, Generate a potential of V_1,V_2,V_3.
- Let's take values of V_1,V_2,V_3 to be 1V,2V,3V respectively.
- So the output (V_{out}) should be equal to 1V.
- But, Practically the output will not exactly be 1V because of the following reasons.

1. Resistor Tolerance Error.
2. Op-Amp Offset Voltage Error.
3. Op-Amp Bias Current Effect.
4. Power Supply Limitations.

- The following are the given inputs.

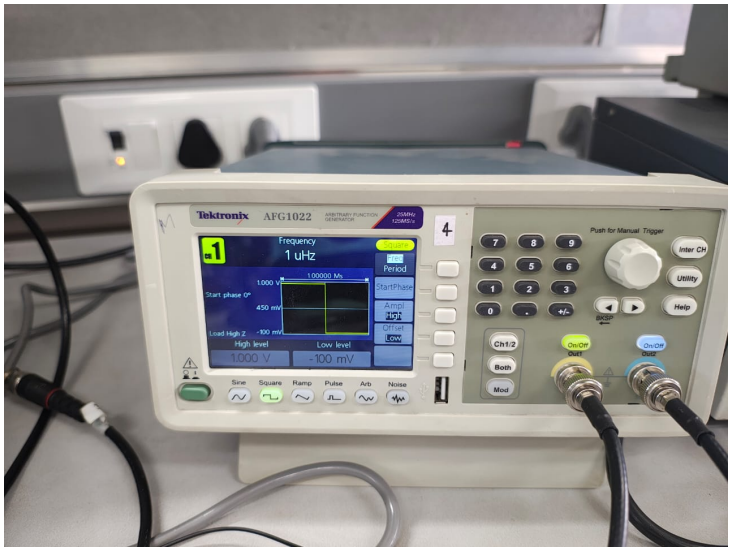

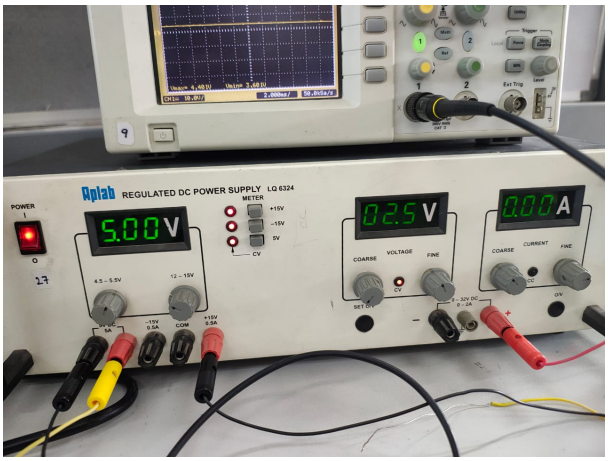

- The following is the Output for the given inputs.

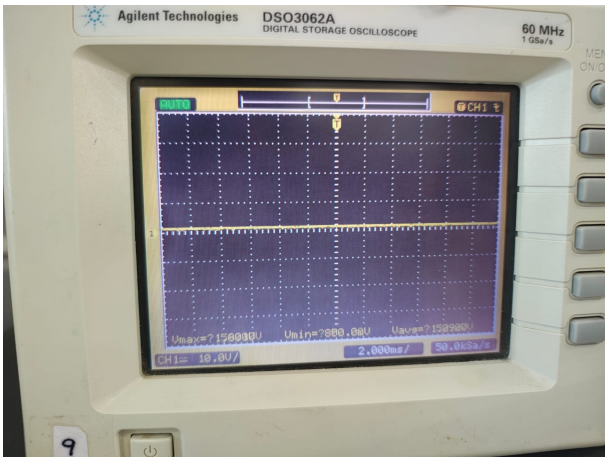

Figure 1: $V_{out} = 2V_1 + V_2 - V_3$

we get

$$V_{out} = 1.2095 \approx 1V \tag{1.28}$$

We get

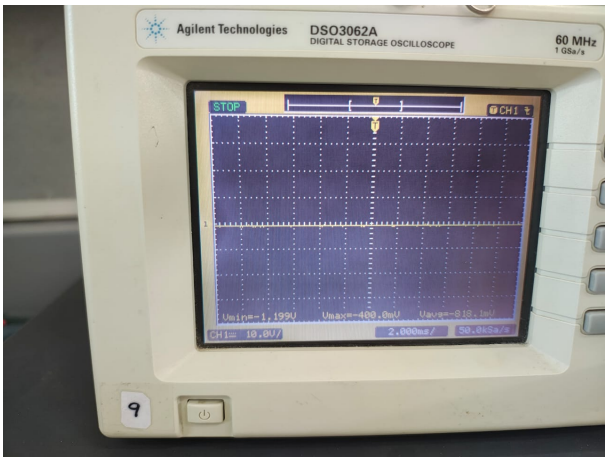

Figure 2: $V_{out} = 2V_1 - V_3$

$$V_out = -0.818V \approx -1V \tag{1.29}$$

Precautions

- Use precise resistor values to maintain proper weighting.
- Ensure proper grounding to avoid unwanted noise.
- Use the correct power supply polarity for the op-amp.
- Avoid exceeding the op-amp's voltage range to prevent clipping or saturation.

2 Op-Amp Integrator

Objective

To design and analyze an op-amp-based integrator that converts a square wave input into a triangular wave output using the LM358 operational amplifier.

Components

- Op-amp (LM358).
- Resistor ($10\,000\,\Omega$,$1\,\mathrm{M}\Omega$).
- Capacitor ($0.22\mu F$).
- DC power supply.
- Function generator.
- Oscilloscope.

Circuit Configuration

- The following is the circuit configuration.

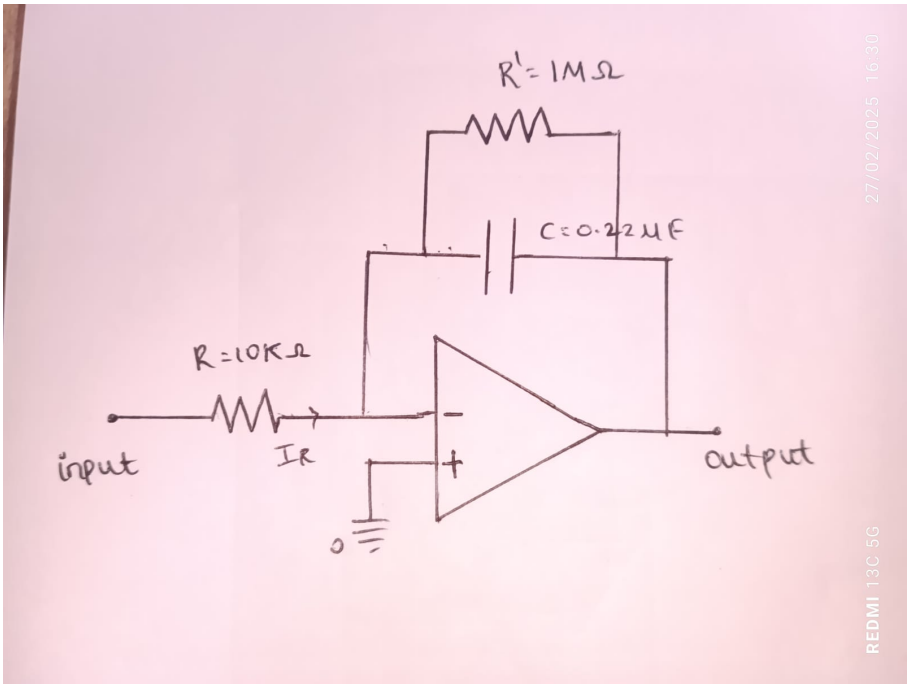

Wiring Connections

- The capacitor, resistor and op-amp are connected as shown in the figure below.

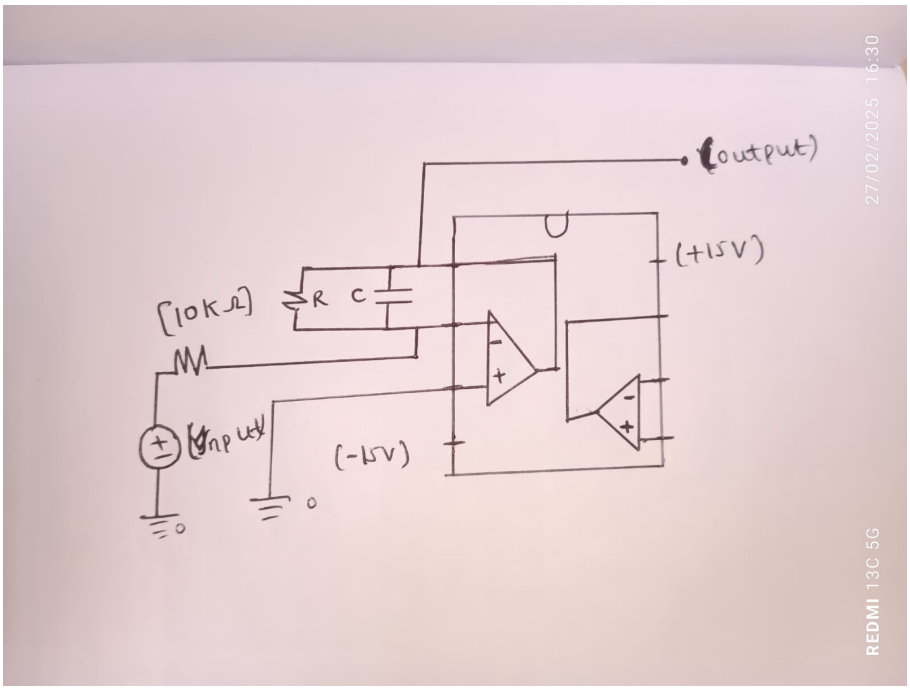

Theoritical Solution(Without a resistor in parallel to capacitor)

From Ohm's law, the current through R is given by

$$I_R = \frac{V_{in}}{R} \tag{2.1}$$

Since this current flows entirely into the capacitor:

$$I_C = I_R = \frac{V_{in}}{R} \tag{2.2}$$

From the capacitor current equation:

$$I_C = C\frac{dV_{out}}{dt} \tag{2.3}$$

Setting both expressions for I_C equal to each other:

$$C\frac{dV_{out}}{dt} = \frac{V_{in}}{R} \tag{2.4}$$

Rearranging

$$\frac{dV_{out}}{dt} = \frac{V_{in}}{RC} \tag{2.5}$$

Integration Effect;

$$V_{out} = -\frac{1}{RC}\int V_{in}dt \tag{2.6}$$

This means that the output voltage (V_{out}) is the integral of the input voltage (V_{in}), multiplied by the factor $-\frac{1}{RC}$.

- If V_{in} is a constant DC voltage, V_{out} will change linearly (ramp signal).
- If V_{in} is a square wave, V_{out} will be a triangular wave, since the integral of a step function is a ramp.
- The negative sign comes from the inverting configuration, meaning that the output signal is phase-inverted compared to a traditional mathematical integrator.

Measuring the output

- After the connections are made, using a function generator a square wave of positive peak $+5V$ and a negative peak $-5V$,A frequency of 500Hz is given.
- Vcc of +15V and -15V to GND pin is given to op-amp.

- There will be an error in the calculated slope and the slope obtained. This is due to the following reasons;

  1. **Resistor and Capacitor Tolerances** – Variations in R and C values affect the integration rate, causing slope errors.
  2. **Op-Amp Offset Voltage** – Small DC offsets in the op-amp introduce drift, altering the output waveform.

The following is a figure of inputs given;

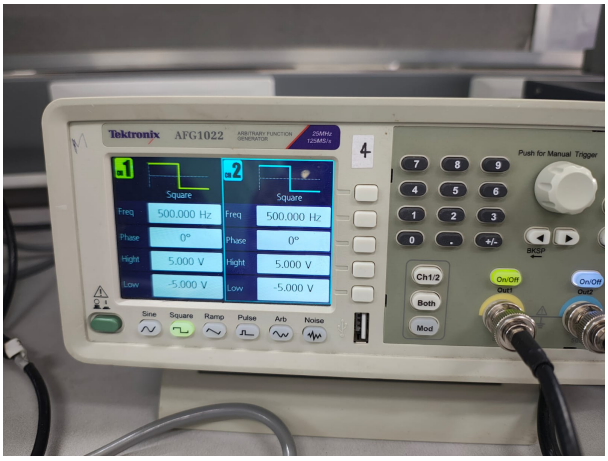

The following is a figure of output obtained(Without Resistor); The following is a figure

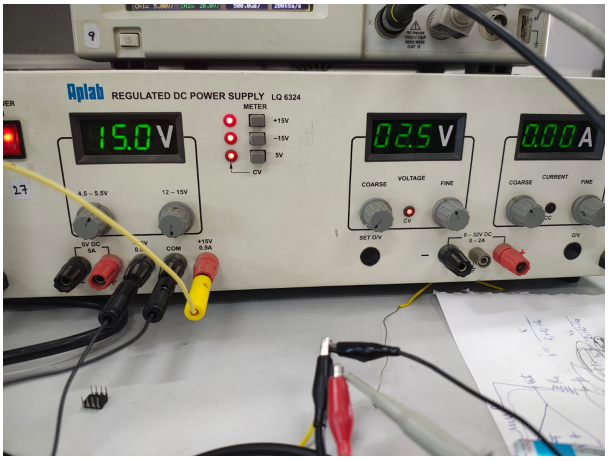

of output obtained(With Resistor);

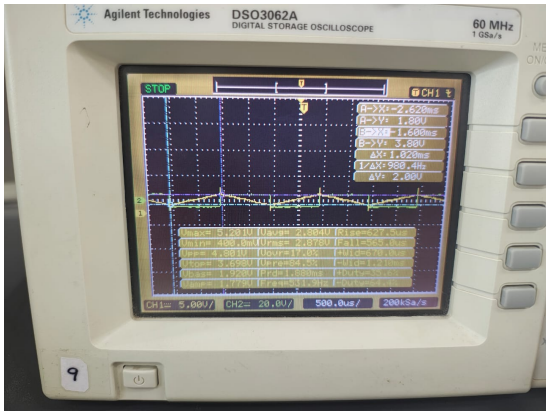

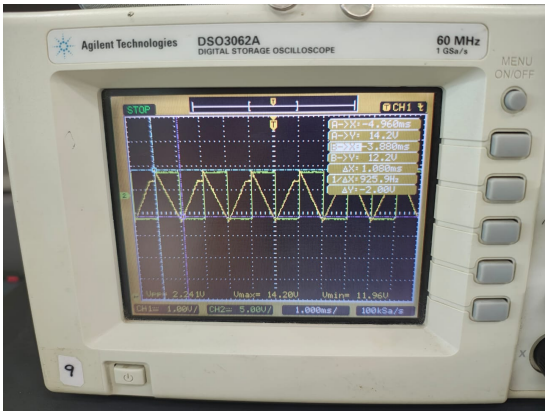

Precautions

- **Use a Stable Power Supply** – Ensure a proper $\pm V_{cc}$ power supply to avoid fluctuations.
- **Avoid Saturation** – Keep the input frequency and amplitude within limits to prevent the op-amp from saturating.
- **Proper Grounding** – Ensure all components share a common ground to minimize noise and errors.
- **Check for Drift and Leakage** – Op-amp integrators can drift over time; use a reset resistor (high-value parallel resistor) across the capacitor to minimize drift.
- **Correct Frequency Selection** – Choose R and C values appropriately to get the desired integration time constant.