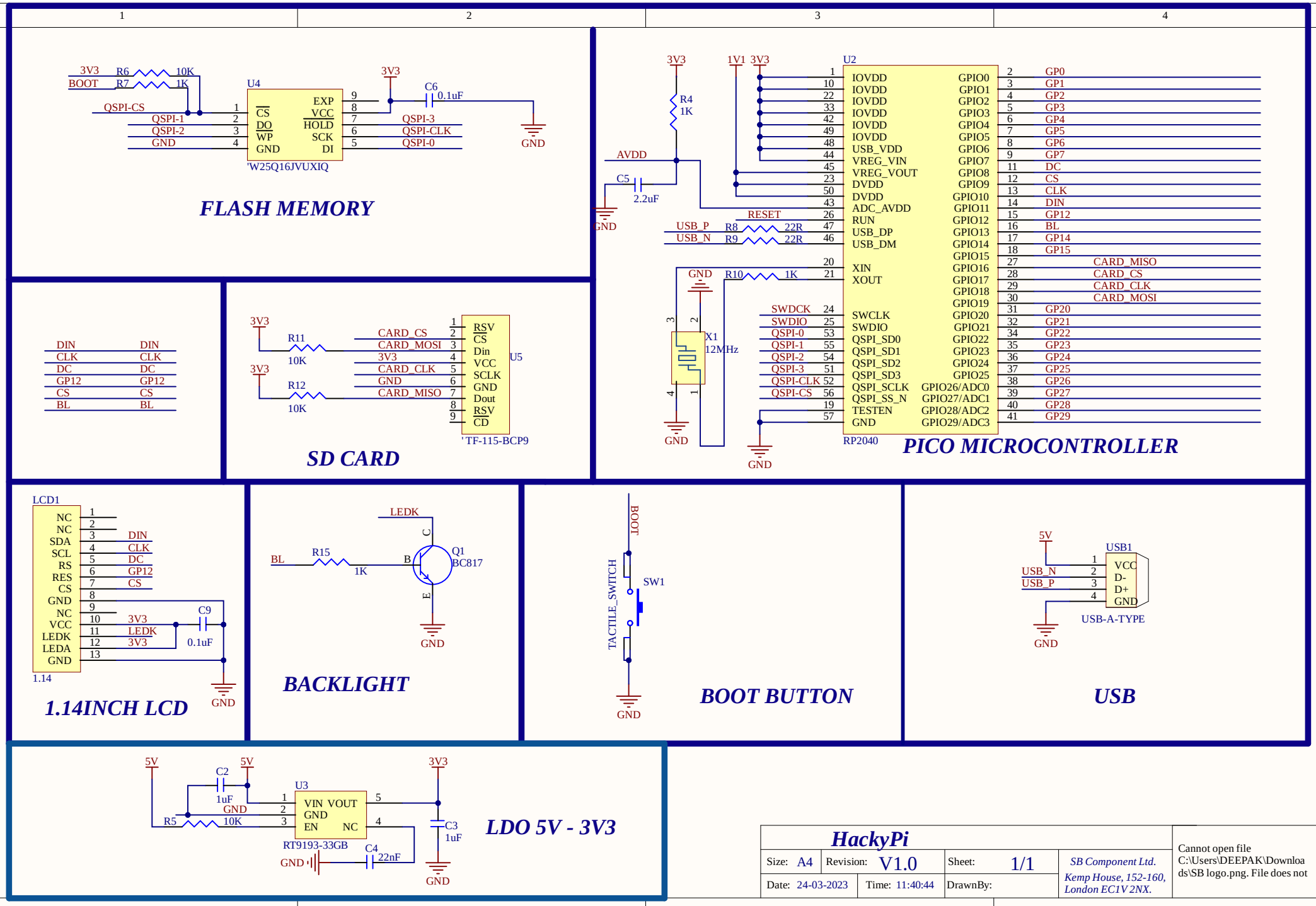
FLASH MEMORY
U4
W25Q16JVUXIQ
3V3
BOOT
R6
10K
R7
1K
QSPI-CS
QSPI-1
QSPI-2
GND
CS
DO
WP
GND
EXP
VCC
HOLD
SCK
DI
QSPI-3
QSPI-CLK
QSPI-0
C6
0.1uF
GND
SD CARD
U5
TF-115-BCP9
R11
10K
R12
10K
CARD_CS
CARD_MOSI
CARD_CLK
CARD_MISO
RSV
CS
Din
VCC
SCLK
Dout
CD
DIN
CLK
DC
GP12
CS
BL
PICO MICROCONTROLLER
U2
RP2040
R4
1K
AVDD
C5
2.2uF
RESET
USB_P
USB_N
R8
22R
R9
22R
R10
1K
X1
12MHz
SWDCK
SWDIO
QSPI-0
QSPI-1
QSPI-2
QSPI-3
QSPI-CLK
QSPI-CS
IOVDD
USB_VDD
VREG_VIN
VREG_VOUT
DVDD
ADC_AVDD
RUN
USB_DP
USB_DM
XIN
XOUT
SWCLK
SWDIO
QSPI_SD0
QSPI_SD1
QSPI_SD2
QSPI_SD3
QSPI_SCLK
QSPI_SS_N
TESTEN
GND
GPIO0
GPIO1
GPIO2
GPIO3
GPIO4
GPIO5
GPIO6
GPIO7
GPIO8
GPIO9
GPIO10
GPIO11
GPIO12
GPIO13
GPIO14
GPIO15
GPIO16
GPIO17
GPIO18
GPIO19
GPIO20
GPIO21
GPIO22
GPIO23
GPIO24
GPIO25
GPIO26/ADC0
GPIO27/ADC1
GPIO28/ADC2
GPIO29/ADC3
GP0
GP1
GP2
GP3
GP4
GP5
GP6
GP7
DC
CS
CLK
DIN
GP12
BL
GP14
GP15
CARD_MISO
CARD_CS
CARD_CLK
CARD_MOSI
GP20
GP21
GP22
GP23
GP24
GP25
GP26
GP27
GP28
GP29
1V1
1.14INCH LCD
LCD1
1.14
NC
SDA
SCL
RS
RES
CS
GND
VCC
LEDK
LEDA
DIN
CLK
DC
GP12
CS
C9
0.1uF
BACKLIGHT
LEDK
BL
R15
1K
Q1
BC817
B
C
E
BOOT BUTTON
BOOT
SW1
TACTILE_SWITCH
USB
USB1
USB-A-TYPE
5V
USB_N
USB_P
VCC
D-
D+
GND
LDO 5V - 3V3
U3
RT9193-33GB
VIN
VOUT
GND
EN
NC
C2
1uF
R5
10K
C4
22nF
C3
1uF
HackyPi
Size: A4
Revision: V1.0
Sheet: 1/1
Date: 24-03-2023
Time: 11:40:44
DrawnBy:
SB Component Ltd.
Kemp House, 152-160,
London EC1V 2NX.
Cannot open file C:\Users\DEEPAK\Downloads\SB logo.png. File does not