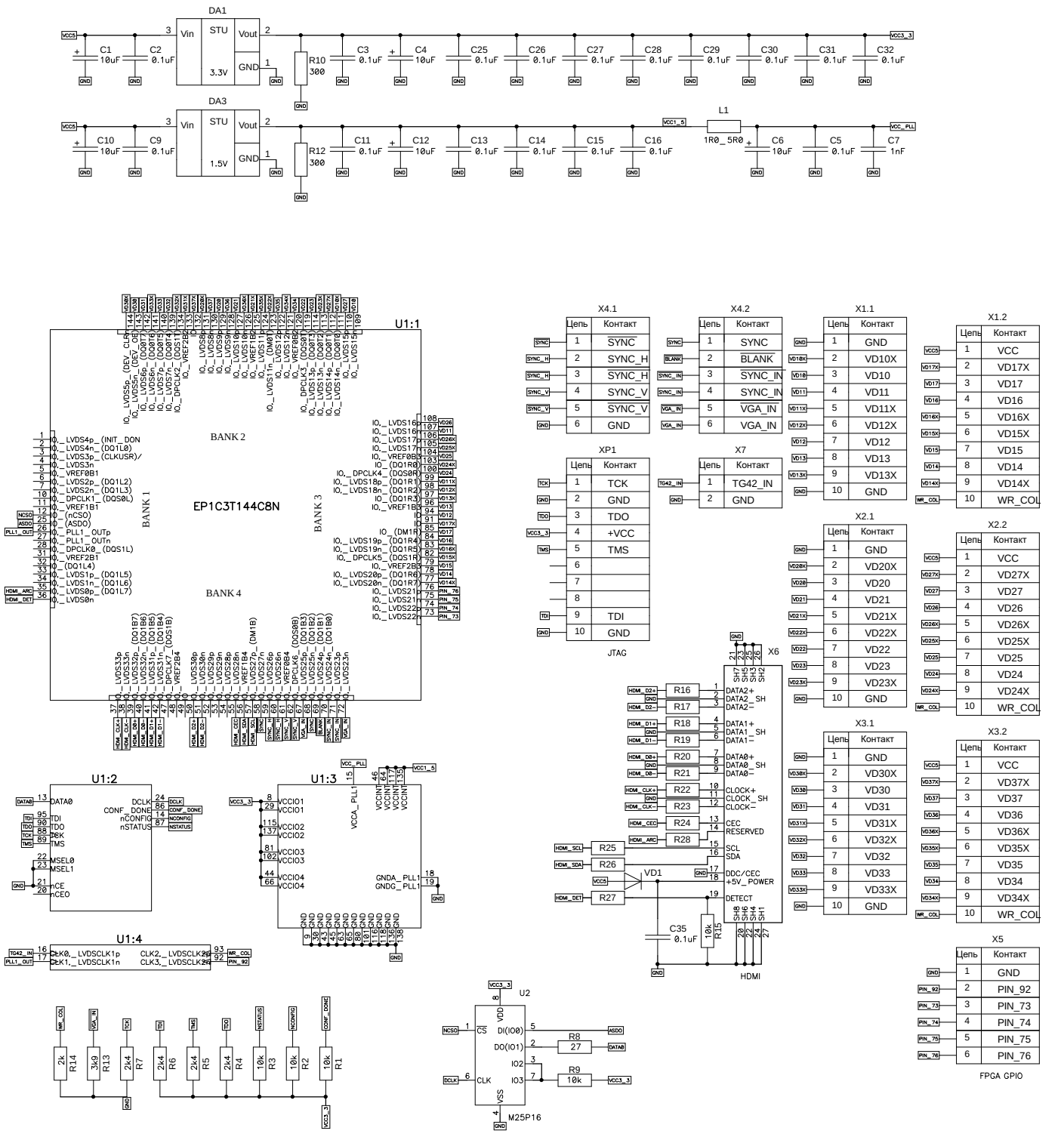
DA1
STU
Vin
Vout
GND
3.3V
DA3
1.5V
L1
1R0_5R0
U1:1
EP1C3T144C8N
BANK 1
BANK 2
BANK 3
BANK 4
U1:2
U1:3
U1:4
X4.1
X4.2
X1.1
X1.2
XP1
X7
JTAG
X6
HDMI
X2.1
X2.2
X3.1
X3.2
X5
FPGA GPIO
U2
M25P16

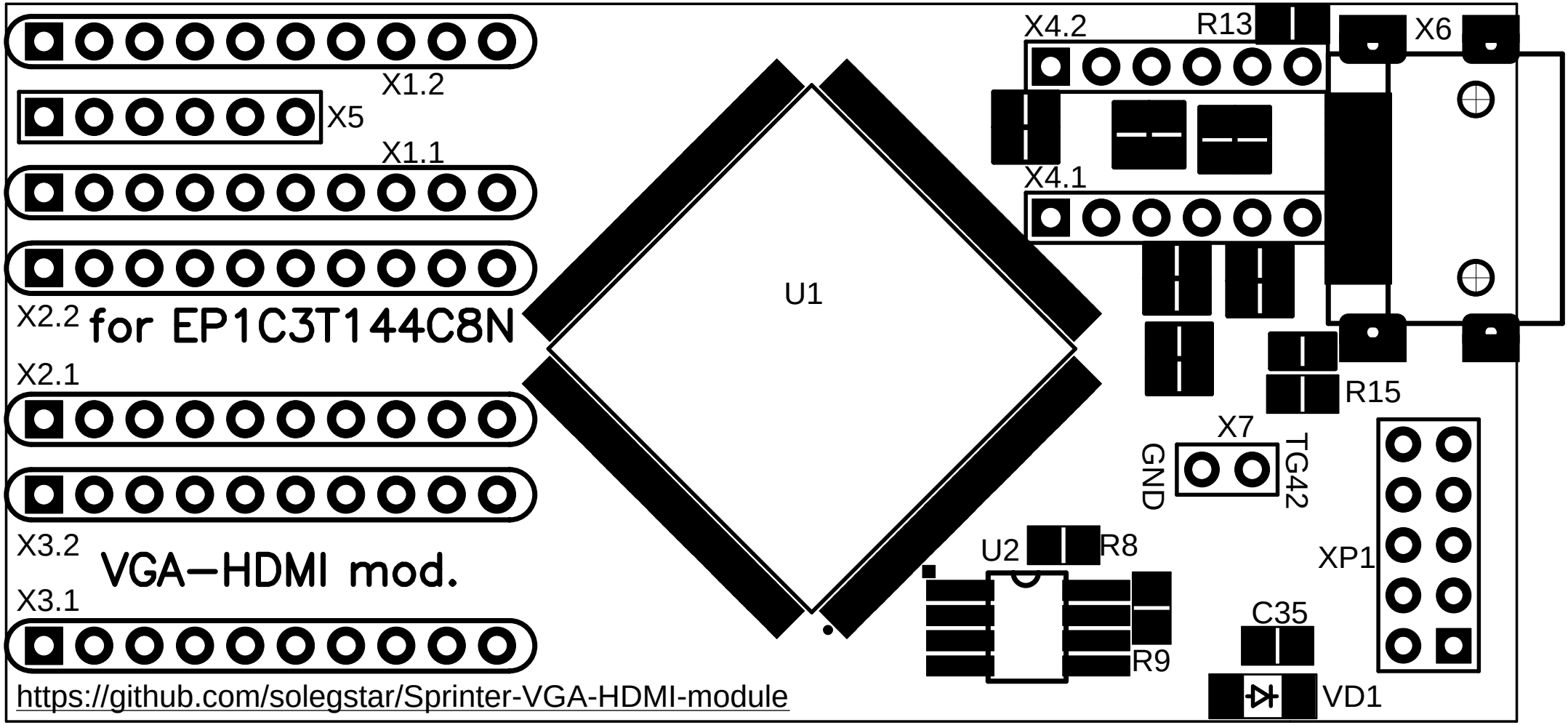
X1.2
X5
X1.1
X2.2
for EP1C3T144C8N
X2.1
X3.2
VGA–HDMI mod.
X3.1
U1
X4.2
R13
X6
X4.1
R15
X7
GND
TG42
U2
R8
R9
XP1
C35
VD1
https://github.com/solegstar/Sprinter-VGA-HDMI-module

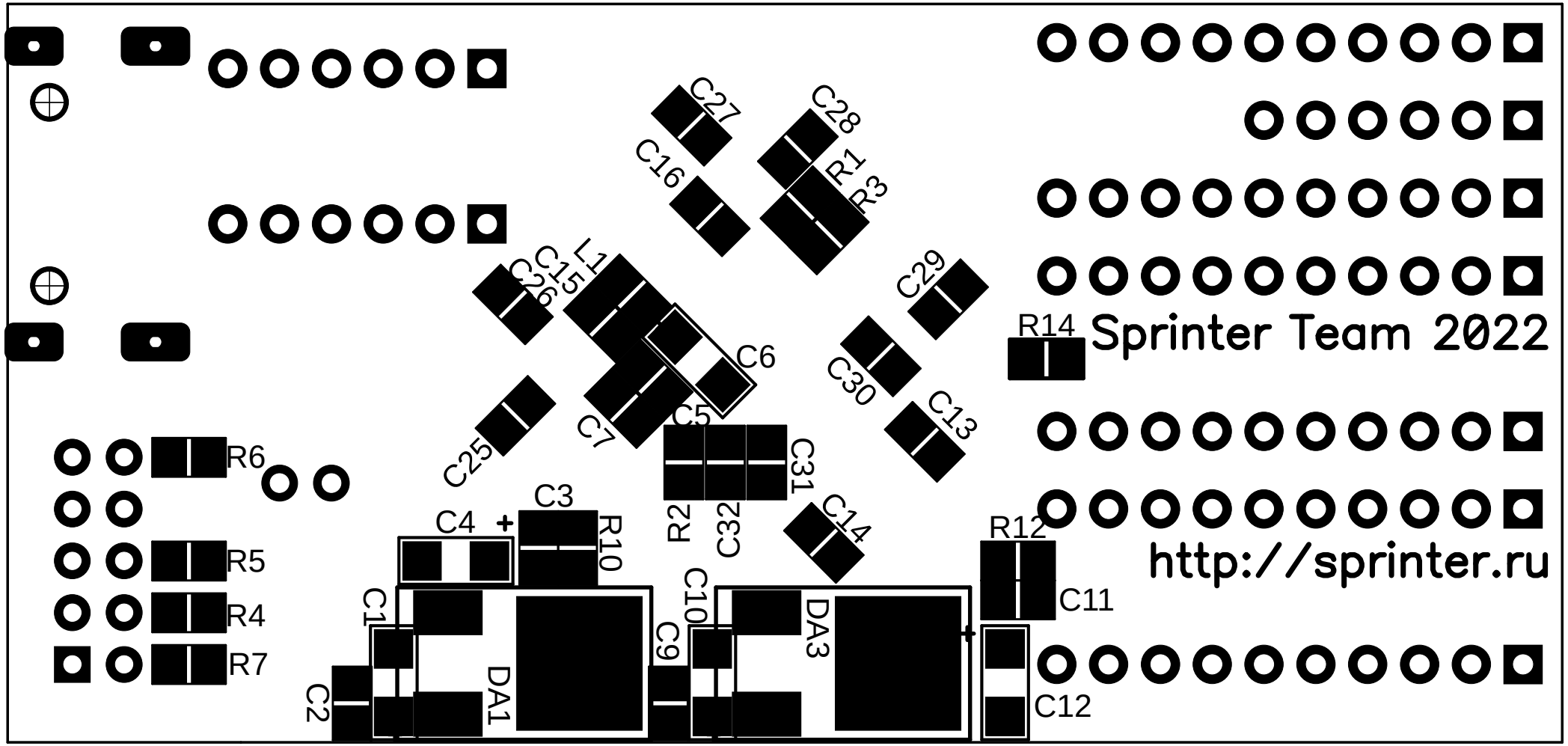
C27
C28
C16
R1
R3
C15
L1
C26
C29
R14
Sprinter Team 2022
C6
C30
C13
C7
C5
C25
C31
R6
C3
C4
R2
C32
C14
R12
R10
R5
http://sprinter.ru
C10
C11
C1
DA3
R4
C9
R7
DA1
C2
C12