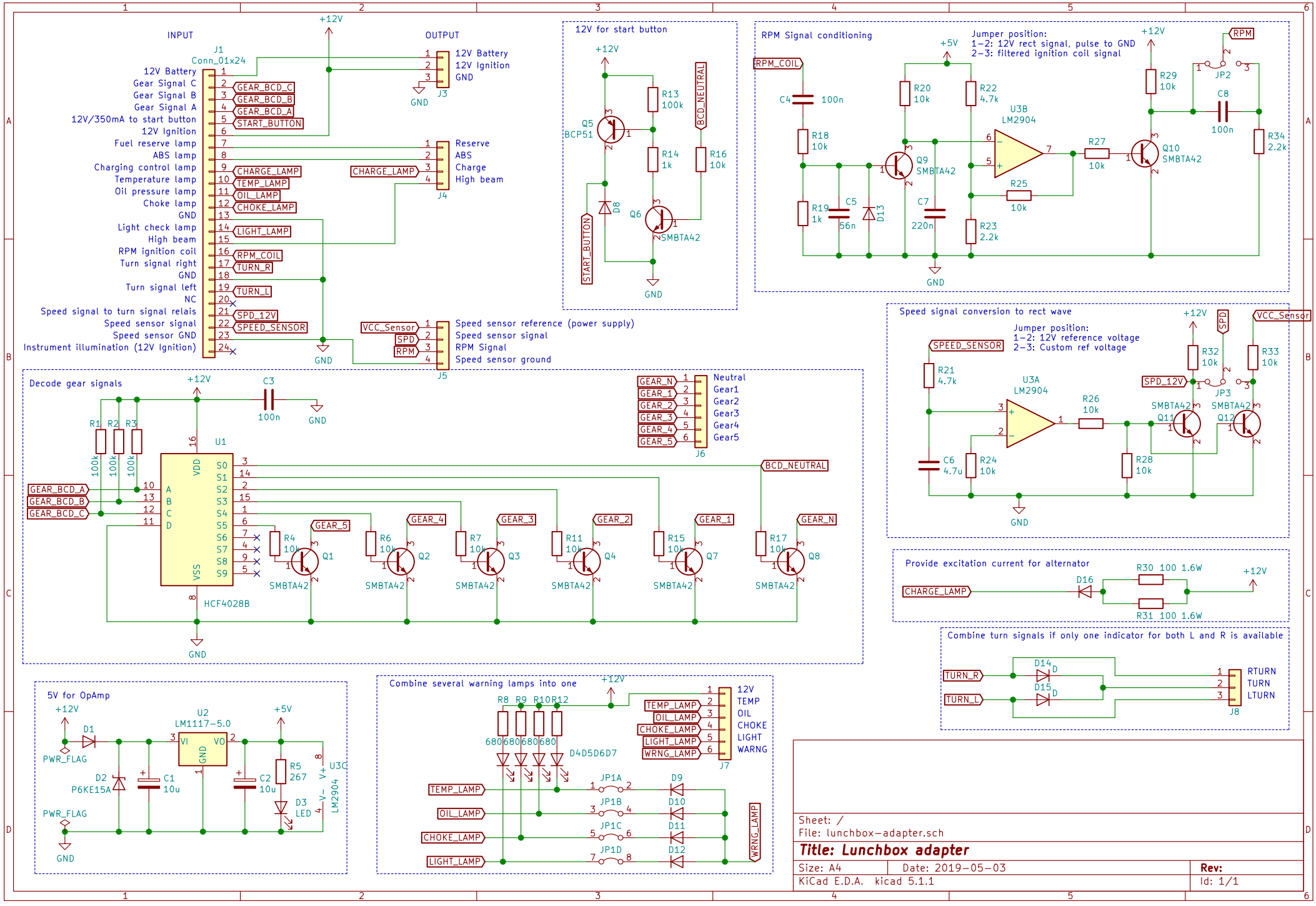
INPUT
J1
Conn_01x24
12V Battery
Gear Signal C
Gear Signal B
Gear Signal A
12V/350mA to start button
12V Ignition
Fuel reserve lamp
ABS lamp
Charging control lamp
Temperature lamp
Oil pressure lamp
Choke lamp
GND
Light check lamp
High beam
RPM ignition coil
Turn signal right
GND
Turn signal left
NC
Speed signal to turn signal relais
Speed sensor signal
Speed sensor GND
Instrument illumination (12V Ignition)
GEAR_BCD_C
GEAR_BCD_B
GEAR_BCD_A
START_BUTTON
CHARGE_LAMP
TEMP_LAMP
OIL_LAMP
CHOKE_LAMP
LIGHT_LAMP
RPM_COIL
TURN_R
TURN_L
SPD_12V
SPEED_SENSOR
+12V
GND
OUTPUT
J3
12V Battery
12V Ignition
GND
J4
Reserve
ABS
Charge
High beam
J5
VCC_Sensor
SPD
RPM
Speed sensor reference (power supply)
Speed sensor signal
RPM Signal
Speed sensor ground
12V for start button
Q5
BCP51
R13
100k
R14
1k
R16
10k
D8
Q6
SMBTA42
BCD_NEUTRAL
RPM Signal conditioning
Jumper position:
1–2: 12V rect signal, pulse to GND
2–3: filtered ignition coil signal
+5V
C4
100n
R18
10k
R19
1k
C5
56n
D13
R20
10k
Q9
SMBTA42
C7
220n
R22
4.7k
R23
2.2k
U3B
LM2904
R25
10k
R27
10k
Q10
SMBTA42
R29
10k
JP2
C8
100n
R34
2.2k
RPM
Decode gear signals
C3
100n
R1
R2
R3
100k
U1
HCF4028B
VDD
VSS
A
B
C
D
S0
S1
S2
S3
S4
S5
S6
S7
S8
S9
R4
10k
Q1
R6
10k
Q2
R7
10k
Q3
R11
10k
Q4
R15
10k
Q7
R17
10k
Q8
GEAR_5
GEAR_4
GEAR_3
GEAR_2
GEAR_1
GEAR_N
J6
Neutral
Gear1
Gear2
Gear3
Gear4
Gear5
Speed signal conversion to rect wave
Jumper position:
1–2: 12V reference voltage
2–3: Custom ref voltage
SPEED_SENSOR
R21
4.7k
U3A
LM2904
C6
4.7u
R24
10k
R26
10k
R28
10k
R32
10k
R33
10k
JP3
SMBTA42
Q11
Q12
SPD
VCC_Sensor
Provide excitation current for alternator
CHARGE_LAMP
D16
R30 100 1.6W
R31 100 1.6W
Combine turn signals if only one indicator for both L and R is available
TURN_R
TURN_L
D14
D15
J8
RTURN
TURN
LTURN
5V for OpAmp
D1
PWR_FLAG
D2
P6KE15A
C1
10u
U2
LM1117-5.0
VI
VO
GND
C2
10u
R5
267
D3
LED
U3C
LM2904
Combine several warning lamps into one
R8
R9
R10
R12
680
D4D5D6D7
J7
12V
TEMP
OIL
CHOKE
LIGHT
WARNG
JP1A
JP1B
JP1C
JP1D
D9
D10
D11
D12
WRNG_LAMP
Sheet: /
File: lunchbox-adapter.sch
Title: Lunchbox adapter
Size: A4
Date: 2019-05-03
Rev:
KiCad E.D.A. kicad 5.1.1
Id: 1/1