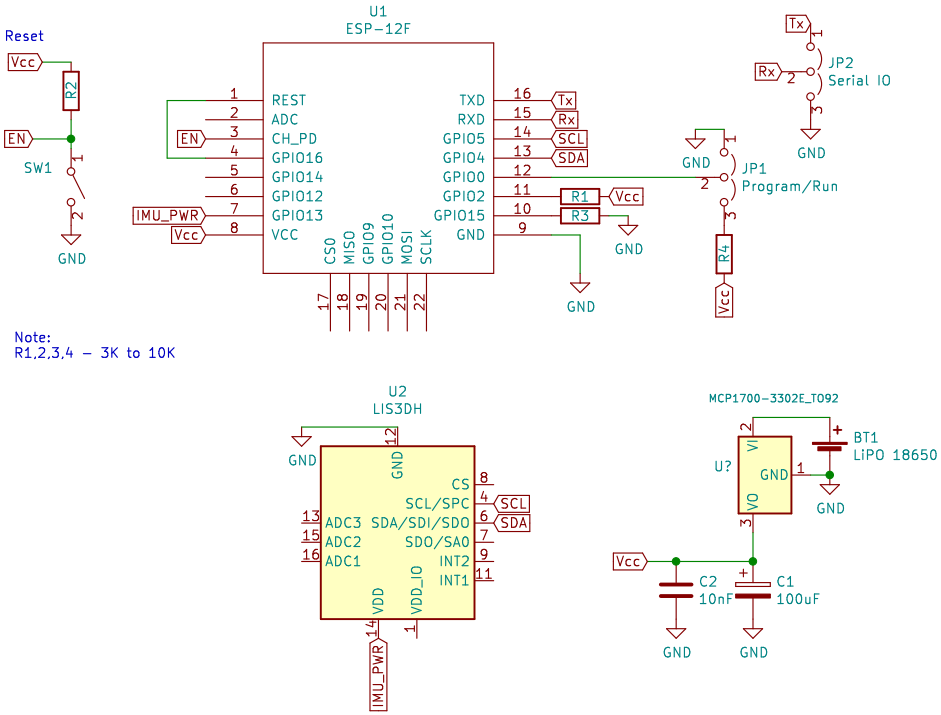

A battery powered inclinometer based on ESP8266 ESP-12F Wifi Module and LIS3DH Accelerometer.

Sheet: /
File: ESP8266Inclinometer.sch

Title: Battery powered ESP8266 & LIS3DH Sensor

Size: A4	Date: December 18th 2019	Rev:
KiCad E.D.A. kicad (5.1.4)-1		Id: 1/1