REV.NO.	CHANGE DETAILS	DATE	PREPARED	APPD.
1.0	INITIAL RELEASE	19.11.21	DLR	YS
1.1	UPDATED WIRE TERMINATION DETAILS	09.10.24	DLR	YS

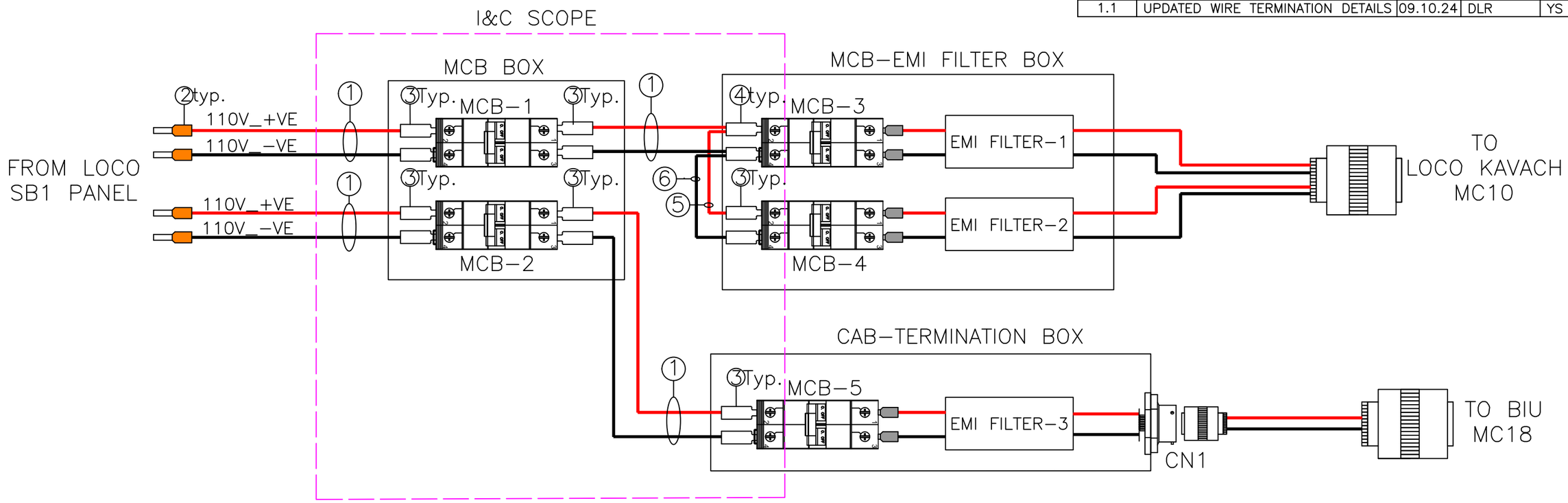

PART LIST

ITEM NO/REF	QTY	UNITS	ITEM CODE	DESCRIPTION
1	50.00	MTR	1000028078	CABLE_ELASTOMERIC_2.5Sqmm
2	2.00	PC	1000037005	FERRULE_INSULATED_2.5MM_58-514L8_JAINSON
3	8.00	PC	1000114834	LUG_4SQ MM_CU_PIN_TYPE_HP7
4	2.00	PC	1000114832	LUG_10SQ MM_CU_PIN_TYPE_HP3
5	0.25	MTR	1000082017	CABLE_PVC INSULATED_4SQMM_1CORE_RED
6	0.25	MTR	1000002013	CABLE_COPPER_FLEXIBLE_1C_4SQMM_BLACK

WIRE TERMINATION

SB PANEL	MCB-1 (TCAS)	MCB-2 (BIU)	MCB-3 (EMI)	MCB-4 (EMI)	MCB-5 (EMI)	WIRE COLOUR	BOM REF#
2094	2	–	–	–	–	RED	1
2050	4	–	–	–	–	BLACK	
–	1	–	2	2	–	RED	1, 5&6
–	3	–	4	4	–	BLACK	
2094	–	2	–	–	–	RED	1
2050	–	4	–	–	–	BLACK	
–	–	1	–	–	2	RED	1
–	–	3	–	–	4	BLACK	

Sl.No.	Drawing No.	Item Description	Material Spec.	Qty.	Remarks

PROJECT: KAVACH

ASSEMBLY: LOCO-TCAS

HBL Power Systems Ltd.
(HBL RAIL)

	NAME	SIGN.	DATE
DRAWN	DLR		
CHECKED	JP		
APPROVED	YS		

SCALE: NTS
SIZE: A3
SHEET: 1 OF 1

TITLE: LOCO TCAS POWER SUPPLY CONNECTIVITY DIAGRAM

DRAWING NO. 5 16 49 0426
REV. 1.1
PART NO.

EFFECTIVE FROM:

ALL DIMENSIONS ARE IN mm

TOLERANCE NOT SPECIFIED SHALL BE AS PER IS : 2102 – 1993.

THIS DRAWING IS THE PROPERTY OF HBL POWER SYSTEMS LIMITED AND MUST NOT BE COPIED, REPRODUCED, TRANSMITTED OR DISCLOSED TO ANY THIRD PARTY WITHOUT THE WRITTEN CONSENT OF THE COMPANY.