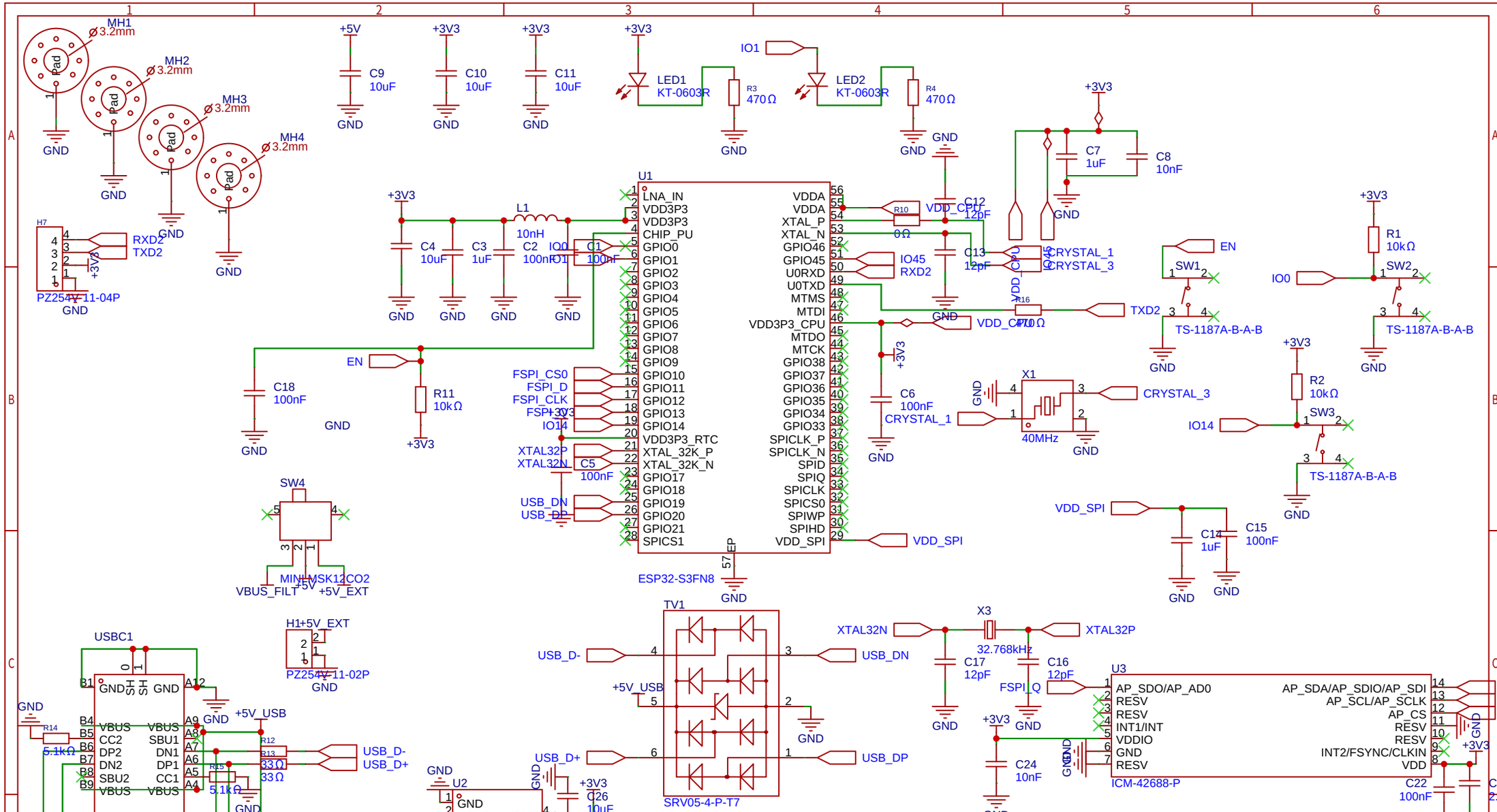

Schematic	Schematic1	Create at	2025-07-02
		Update at	2025-07-06
Board	Board1	Page	P1
Drawn			
Reviewed			
		RC Plane Flight Computer	
		Version	Size	Page 1 Total 1
EasyEDA		V1.0	A4	EasyEDA.com