TRINAI
Vision With Intelligence

Mini Dome-Internal Camera (720P)

Model No: AI11DM0867

- 1/3” 1.3MP CMOS sensor
- Resolution: 1280H × 720V
- Low Light Performance: 0 lux (with IR), 0.01 lux (without IR)
- Features: Automatic electronic shutter, exposure control, and white balance adjustment
- Lens Options: Compatible with 2.5mm, 2.8mm, and 3.6mm lenses
- Infrared Range: Effective up to 5–8 meters for night vision
- Design: Compact and easy to install, optimized for in-vehicle vibration resistance
- Audio: Built-in microphone with a capture range of up to 5 meters

Specifications	
Model Name	AI11DM0867
Imaging sensor	1/3 〃 1.3M pixel CMO
Resolution	1280H*720V
Synchronization system	Internal synchronization
S/N	≥ 50dB | ≥ 45dB
Electronic shutter	1/25s-1/25,000s (auto)
Day/night mode	ICR IR filter
Auto gain | 3D noise reduction	Supported
Smart IR	None | A6410H Supported
IR range	5-8m
Video output	1.0Vp-p Composite video output, 75Ω, 4PIN aviation cable
Communication Interface	RS485, Wiegand, USB, TCP/IP
Audio	Built-in Speaker for Voice Prompts
Power Supply	DC12V± 10%
Operating temperature	-40°C ~ 70°C
IP rating	IP65 (audio); IP67 (no audio)
Installation mode	Support ceiling-suspended installation
Dimensions	70mm*70mm*56.5mm (L*W*H)
Net weight	About 210g

Product dimensions

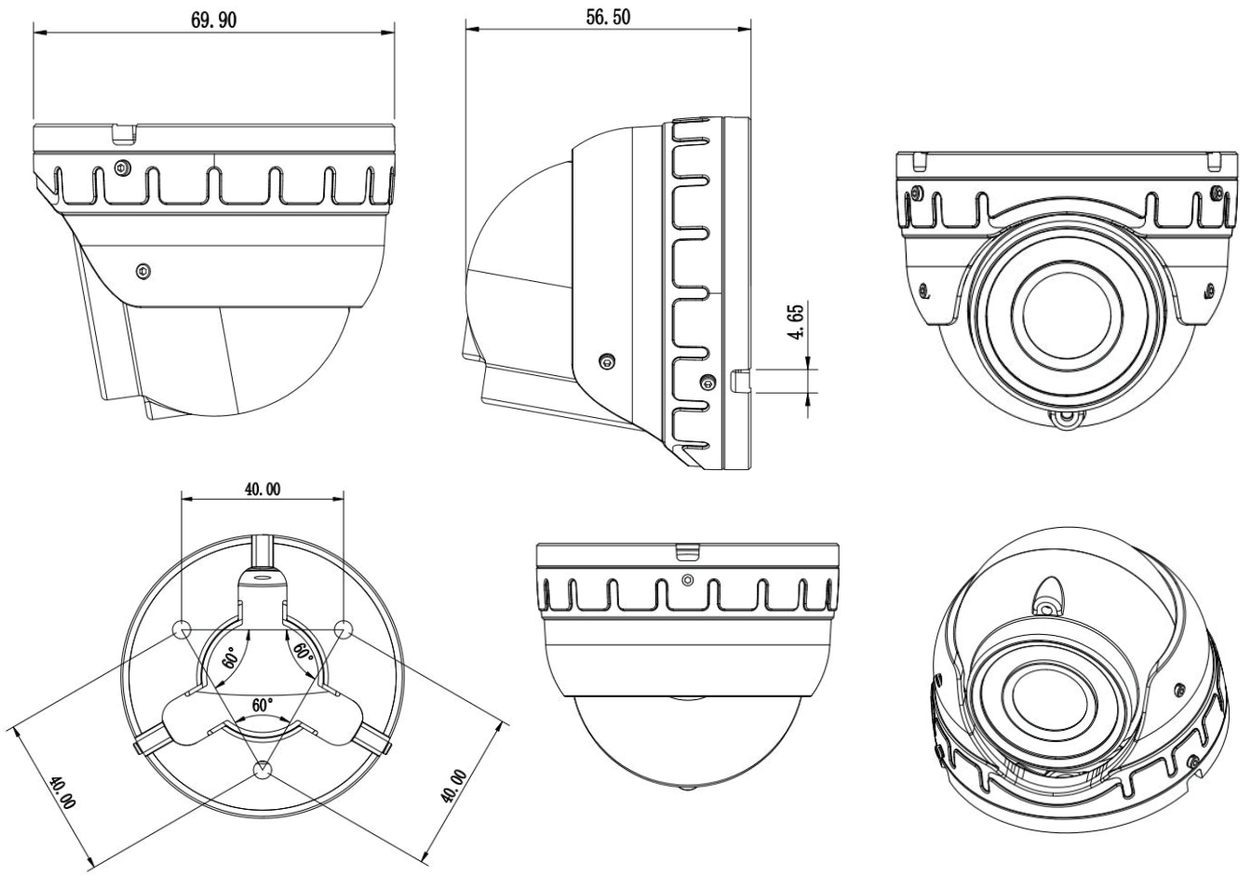

Interface of video output cable

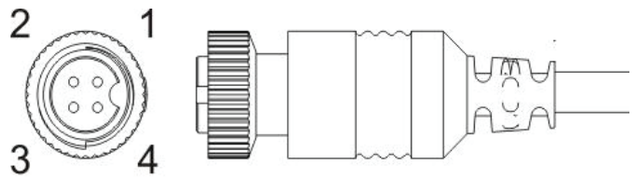

Aviation RS765-4(Female)

1---12V DC(+) 3---AUDIO

2---GND 4---VIDEO