TRINAI
Vision With Intelligence

Model No: AI0404PRO

Product Features

- Runs on an Embedded Linux OS for stability and performance
- Integrated 4G/5G, GPS, Wi-Fi, and Bluetooth technologies
- Supports 1080P/720P video recording
- Utilizes H.265/H.264 video compression for optimized storage efficiency
- Equipped with a 3.5-inch hard disk, featuring heating and power-off protection
- Optional support for two 2.5-inch SSDs
- IO wake-up function supported
- Supports 4 AHD channels and 4 IPC channels for hybrid video input
- Built-in features for bus dispatch and announcements, with interface for high-power amplifiers
- SD card backup for additional data safety
- Designed for high vibration resistance and reliable long-term operation
- Compatible with fireproof storage boxes for disaster recovery and data protection

Specifications	
Model Name	AI0404PRO
Operating System	Linux
Control Modes	Interactive Touch Screen,Network
Video Inputs	4-channel AHD + 4-channel IPC
Video Outputs	1 CVBS + 1 VGA
Audio Inputs	4 AHD + 4 IPC
Audio Outputs	1 Channel
Display Split	1/4/9 Screens
Display Info	Positioning info, alarms, license plates speed, time
Recording Format	Video: H.264/H.265, Audio: ADPCM, G.711U, G.711A
Image Resolution (AHD - PAL)	1080p, 720p, WD1, WHD1, WCIF, D1, HD1, CIF
Image Resolution (AHD - NTSC)	1080p, 720p, WD1, WHD1, WCIF, D1, HD1, CIF
Image Resolution (IPC)	1080p, 720p
Image Quality Levels	1080p, 720p
Recording Trigger	Startup/Scheduled/Alarm
Recording Delay	0-30 min
Playback Channel	1-channel local
Search Modes	By date/time/channel/event
3G/4G	Any Indian Sims

Specifications	
Wi-Fi	802.11a/b/g/n
5G	Optional support
Ethernet	1 × RJ45 (10/100M)
GPS	Supported G-mouse
G-Sensor	6-axis built-in
HDD/SSD	1×3.5" SATA HDD + 1×M.2 SSD; optional 2×2.5" SSD
SD Storage	32/64/128/256 GB SDXC (hot-swappable)
USB Ports	1 × USB2.0 (5-pin) + 1 × USB2.0 (Type A)
SD Slot	1 Slot
SIM Slot	1 Slot
Serial Ports	2 × RS232 + 2 × RS485
CAN	1 × CAN
IO Ports	8 input + 2 output
Pulse Speed Detection	1 channel
Control Panel	CP4 (Tablet)
Intercom	1 × MIC port
VGA Port	1 × VGA
Power Input	DC 8–36V
Power Output	5V @ 500mA & 12V @ 500mA

Specifications	
Max Power Consumption	45W
Standby Power	≈ 0W
Dimensions (mm)	348.4 x 189.5 x 95.7
Net Weight	3.0 kg (no HDD)
Operating Temp	-40°C to +70°C
Operating Humidity	8% to 95% (non-condensing)

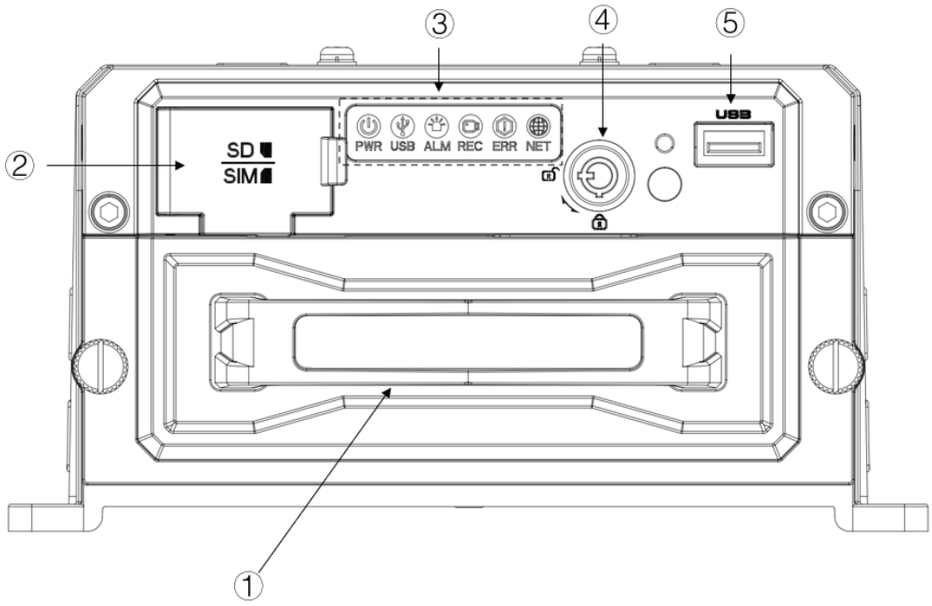

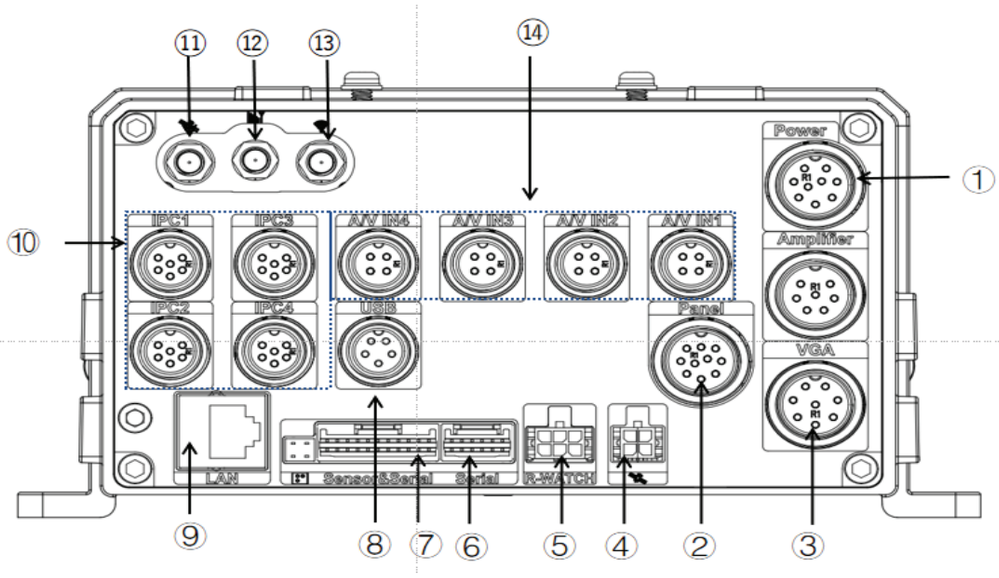
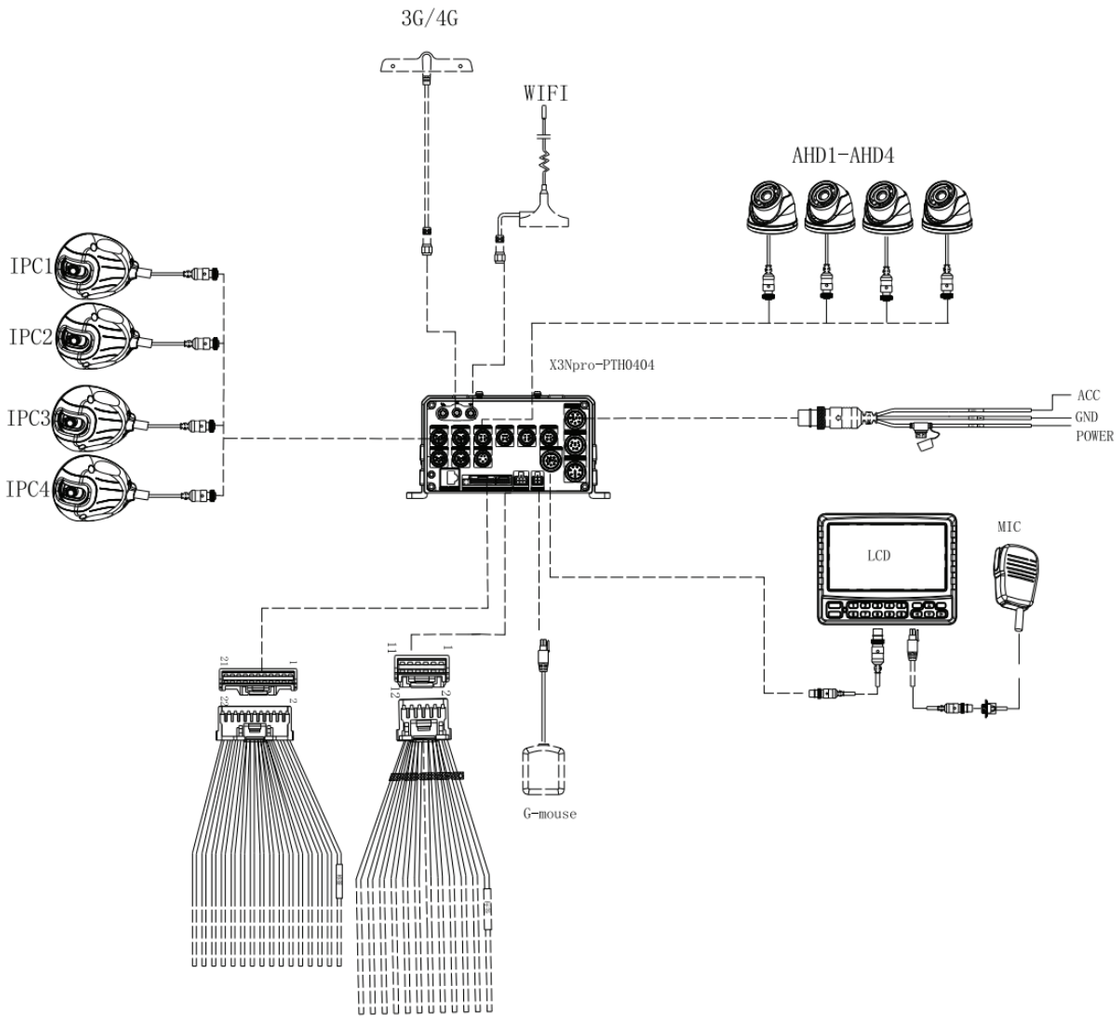
Product Installation