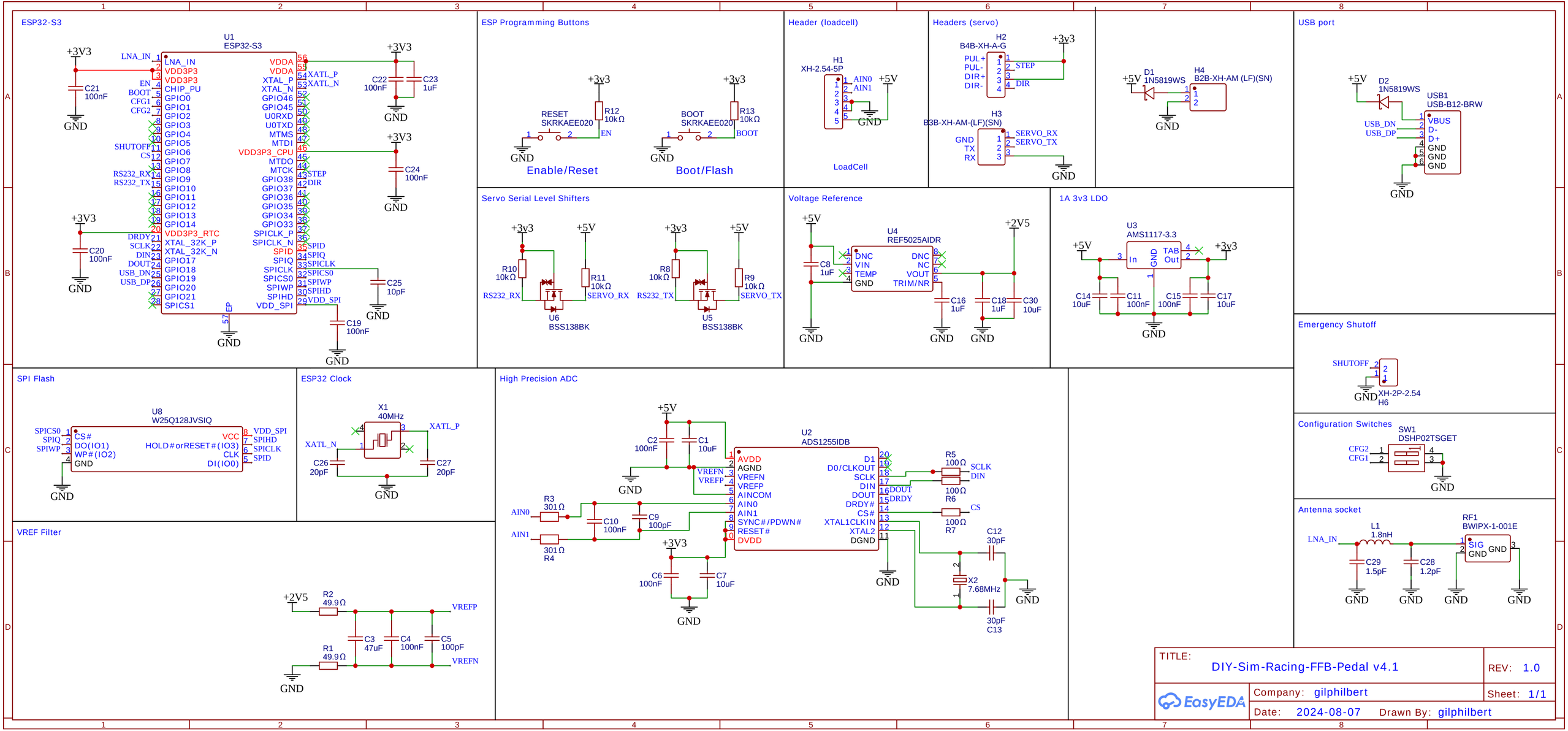
ESP32-S3
U1
ESP32-S3
LNA_IN
VDD3P3
VDD3P3
CHIP_PU
GPIO0
GPIO1
GPIO2
GPIO3
GPIO4
GPIO5
GPIO6
GPIO7
GPIO8
GPIO9
GPIO10
GPIO11
GPIO12
GPIO13
GPIO14
VDD3P3_RTC
XTAL_32K_P
XTAL_32K_N
GPIO17
GPIO18
GPIO19
GPIO20
GPIO21
SPICS1
VDDA
VDDA
XTAL_P
XTAL_N
GPIO46
GPIO45
U0RXD
U0TXD
MTMS
MTDI
VDD3P3_CPU
MTDO
MTCK
GPIO38
GPIO37
GPIO36
GPIO35
GPIO34
GPIO33
SPICLK_P
SPICLK_N
SPID
SPIQ
SPICLK
SPICS0
SPIWP
SPIHD
VDD_SPI
EN
BOOT
CFG1
CFG2
SHUTOFF
CS
RS232_RX
RS232_TX
DRDY
SCLK
DIN
DOUT
USB_DN
USB_DP
STEP
DIR
EP
+3V3
C21 100nF
C20 100nF
C22 100nF
C23 1uF
C24 100nF
C25 10pF
C19 100nF
GND
ESP Programming Buttons
RESET
SKRKAEE020
R12 10kΩ
EN
Enable/Reset
BOOT
SKRKAEE020
R13 10kΩ
BOOT
Boot/Flash
+3v3
Header (loadcell)
H1
XH-2.54-5P
AIN0
AIN1
+5V
LoadCell
Headers (servo)
H2
B4B-XH-A-G
PUL+
PUL-
DIR+
DIR-
STEP
DIR
H3
B3B-XH-AM-(LF)(SN)
GND
TX
RX
SERVO_RX
SERVO_TX
D1
1N5819WS
H4
B2B-XH-AM (LF)(SN)
USB port
D2
1N5819WS
USB1
USB-B12-BRW
VBUS
D-
D+
USB_DN
USB_DP
Servo Serial Level Shifters
R10 10kΩ
R11 10kΩ
RS232_RX
SERVO_RX
U6
BSS138BK
R8 10kΩ
R9 10kΩ
RS232_TX
SERVO_TX
U5
BSS138BK
Voltage Reference
U4
REF5025AIDR
DNC
VIN
TEMP
GND
DNC
NC
VOUT
TRIM/NR
C8 1uF
C16 1uF
C18 1uF
C30 10uF
+2V5
1A 3v3 LDO
U3
AMS1117-3.3
In
GND
TAB
Out
C14 10uF
C11 100nF
C15 100nF
C17 10uF
Emergency Shutoff
SHUTOFF
XH-2P-2.54
H6
Configuration Switches
SW1
DSHP02TSGET
CFG2
CFG1
SPI Flash
U8
W25Q128JVSIQ
CS#
DO(IO1)
WP#(IO2)
GND
VCC
HOLD#orRESET#(IO3)
CLK
DI(IO0)
SPICS0
SPIQ
SPIWP
VDD_SPI
SPIHD
SPICLK
SPID
ESP32 Clock
X1
40MHz
XATL_P
XATL_N
C26 20pF
C27 20pF
High Precision ADC
U2
ADS1255IDB
AVDD
AGND
VREFN
VREFP
AINCOM
AIN0
AIN1
SYNC#/PDWN#
RESET#
DVDD
D1
D0/CLKOUT
SCLK
DIN
DOUT
DRDY#
CS#
XTAL1CLKIN
XTAL2
DGND
DRDY
R3 301Ω
R4 301Ω
C10 100nF
C9 100pF
C2 100nF
C1 10uF
C6 100nF
C7 10uF
R5 100Ω
R6 100Ω
R7 100Ω
C12 30pF
X2 7.68MHz
30pF C13
Antenna socket
L1 1.8nH
RF1
BWIPX-1-001E
SIG
GND
C29 1.5pF
C28 1.2pF
VREF Filter
R2 49.9Ω
R1 49.9Ω
C3 47uF
C4 100nF
C5 100pF
VREFP
VREFN
TITLE:
DIY-Sim-Racing-FFB-Pedal v4.1
REV: 1.0
Company: gilphilbert
Sheet: 1/1
Date: 2024-08-07
Drawn By: gilphilbert
EasyEDA