REV	DESCRIPTION	DATE	DRAWN	CHECKED	APPROVED
A	INITIAL REVISION	MAR 09 2020	J. ROBINSON	W. KEHOE	G. ZILLIAC

NOTES:

1. MATERIAL: AL6061-T6

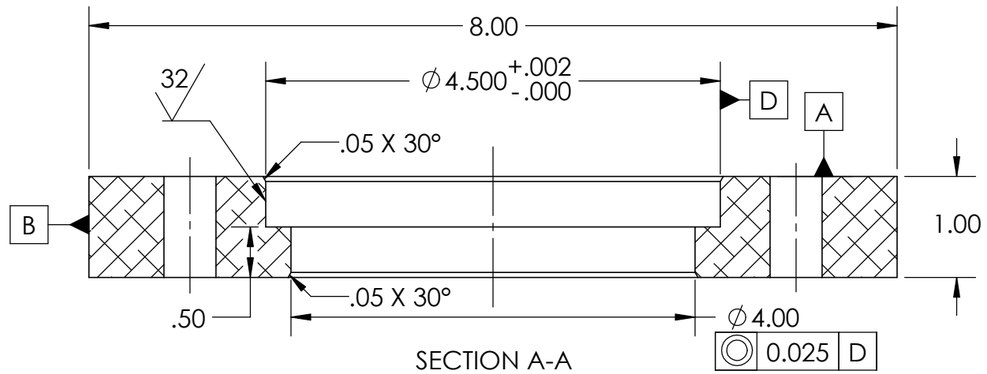

SECTION A-A

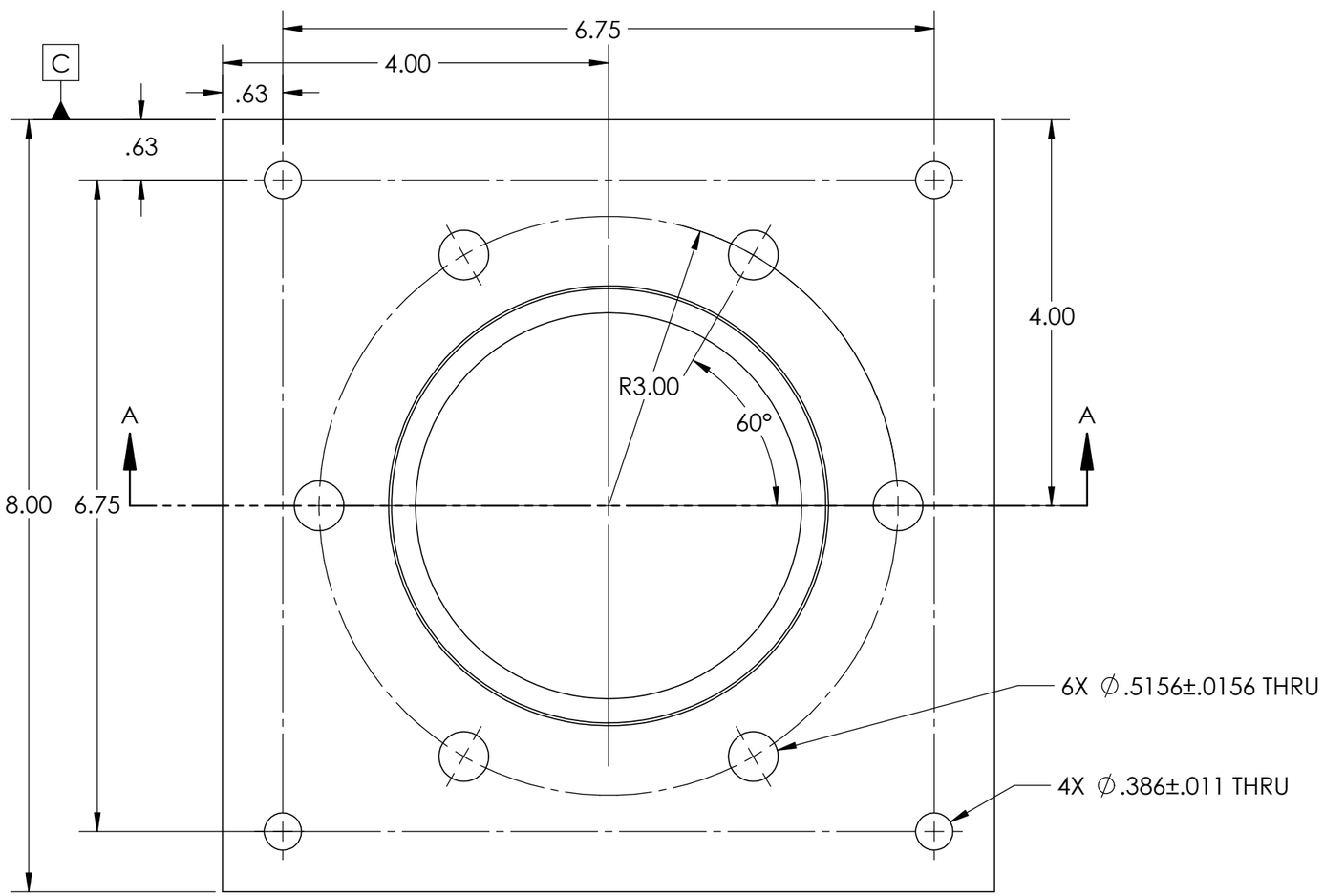

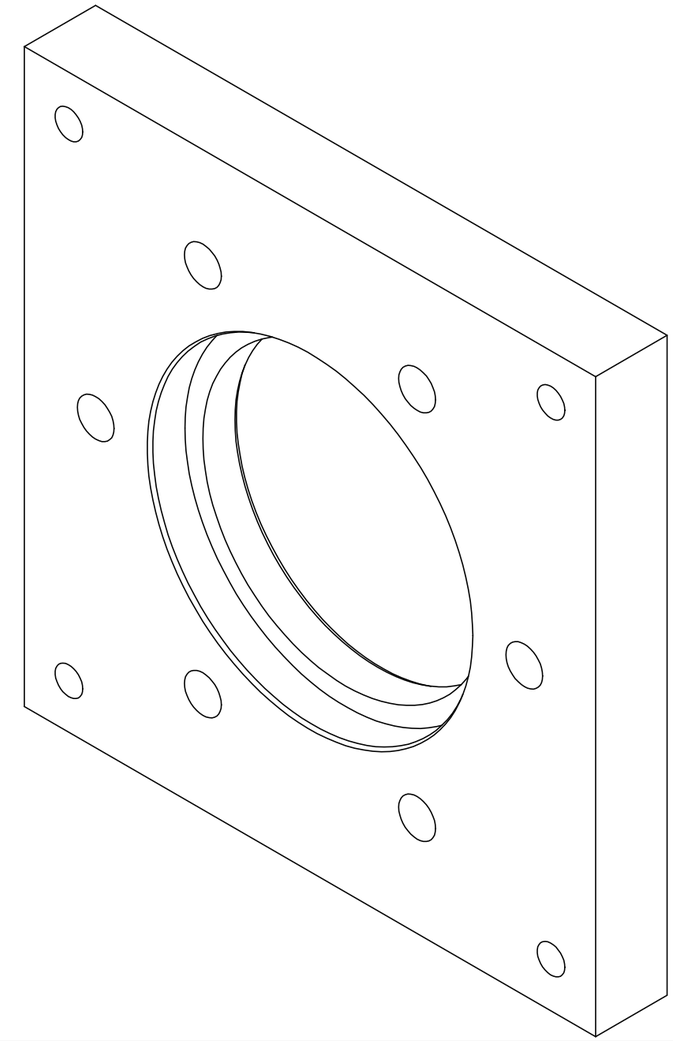

UNLESS OTHERWISE SPECIFIED
DIMENSIONS ARE IN INCHES
TOLERANCES:
.X ± 0.025 ANGLES ± 1°
.XX ± 0.010
.XXX ± 0.005
SURFACE ROUGHNESS: 125
CORNER & FILLET RADII: .005-.020
THREADS: CLASS 2
REMOVE ALL BURRS

DRAWING MADE IN THIRD ANGLE PROJECTION

DO NOT SCALE DRAWING

STANFORD AA284 TEAM A

TITLE

NOZZLE END FLANGE

SIZE	DWG NO	REV
B	AA284-A-NEF	A

SCALE: 1:1.5 | WEIGHT: 4.78 LB | SHEET 1 OF 1

SOLIDWORKS Educational Product. For Instructional Use Only.