REV	DESCRIPTION	DATE	DRAWN	CHECKED	APPROVED
A	INITIAL REVISION	MAR 16 2020	J. ROBINSON	W. KEHOE	

NOTES:

1. MATERIAL: 316 STAINLESS STEEL
2. SURFACE ROUGHNESS APPLIES WITHIN ANNULAR ZONE MARKED
3. PORT PER SAE J1926-1 / MS16142 STRAIGHT THREAD O-RING PORT, SIZE -2

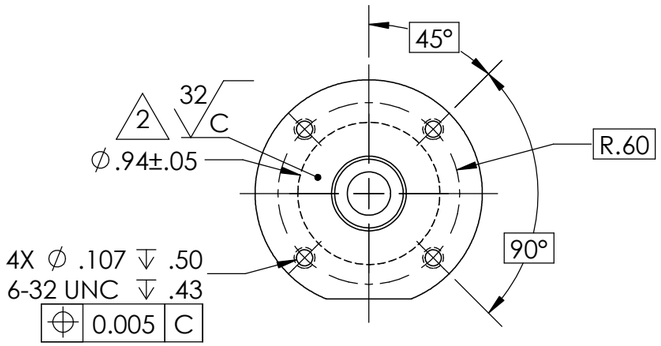

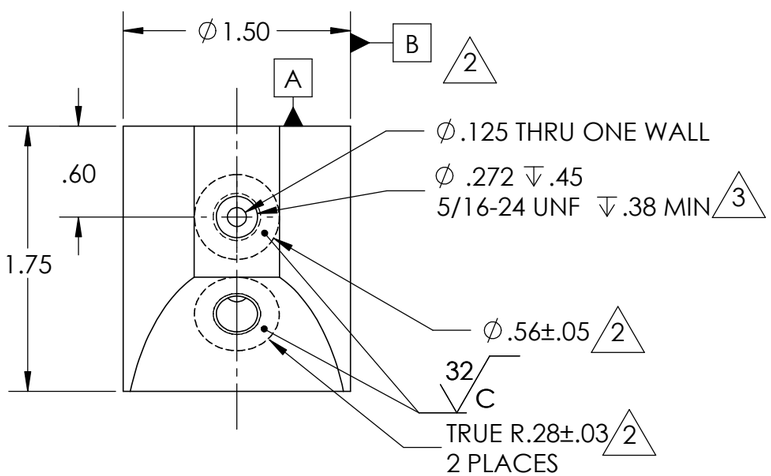

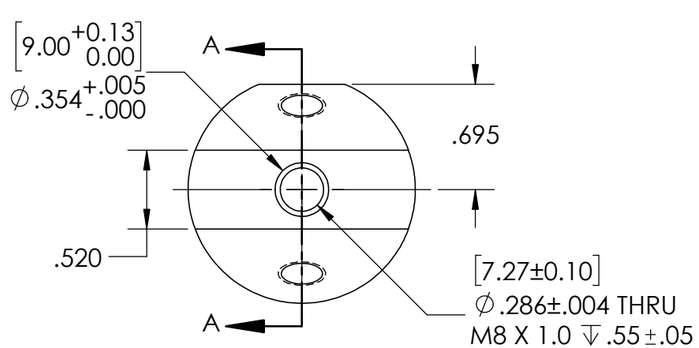

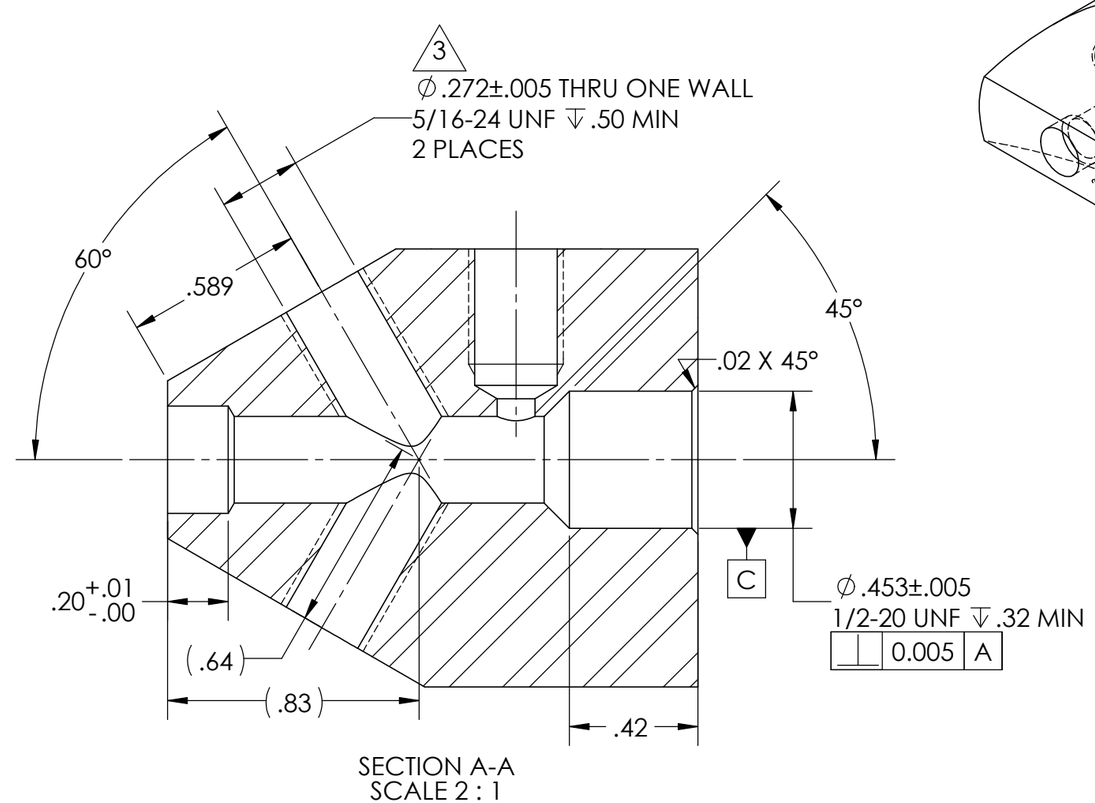

SECTION A-A
SCALE 2 : 1

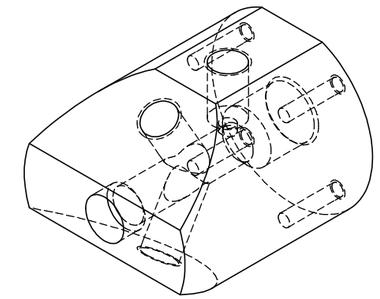

CONTACT:
jbrobin@stanford.edu
610-592-4620

UNLESS OTHERWISE SPECIFIED
DIMENSIONS ARE IN INCHES
TOLERANCES:
.X ± 0.025 ANGLES ± 1°
.XX ± 0.010
.XXX ± 0.005
SURFACE ROUGHNESS: 125
CORNER & FILLET RADII: .005-.020
THREADS: CLASS 2
REMOVE ALL BURRS
DRAWING MADE IN THIRD ANGLE PROJECTION
DO NOT SCALE DRAWING

STANFORD AA284 TEAM A

TITLE
IGNITER FITTING HEAD

SIZE	DWG NO	REV
B	AA284-A-IGFH	A

SCALE: 1:1 | WEIGHT: 0.71 LB | SHEET 1 OF 1

SOLIDWORKS Educational Product. For Instructional Use Only.