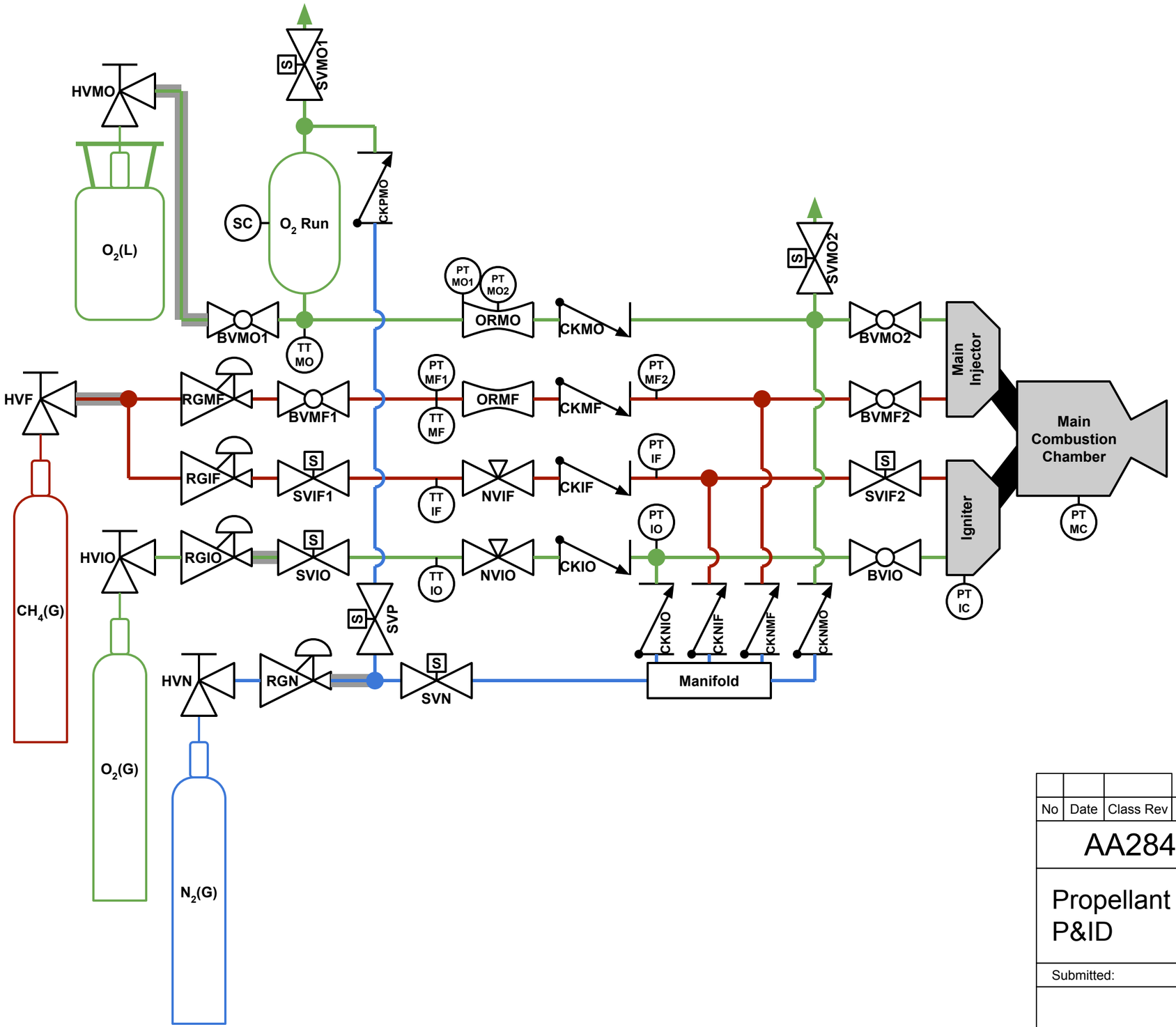

Flow Controls	
BV	Ball Valve
CK	Check Valve
HV	Hand Valve (Tank Valve)
NV	Needle Valve
OR	Orifice/Venturi
PR	Pressure Relief Valve
RG	Pressure Regulator
SV	Solenoid Valve
Instruments	
TT	Temperature Transducer
PT	Pressure Transducer
SC	Scale
Fluid Media	
MO	Main Injector (Liquid) Oxygen
MF	Main Injector Fuel (CH4)
IO	Igniter Oxygen (Gaseous)
IF	Igniter Fuel (CH4)
N, P	Nitrogen (N-Purge, P-Pressurant)
[Type][Working Medium][Adjacent Medium]	

No	Date	Class Rev	Description	DWN	VER	CHKD	SUB	APP

AA284 Team A - LOx/CH4 Rocket

Propellant Feed System P&ID

Drawn:
Design:
Checked:
Date:

Submitted:
Approved for release:

Sheet: S-0001
of

Classification:
Reviewer:
Date: 2020/02/24

Project ID:
Drawing no:
Rev. 7