Week 2: Coding Day

“Teamworking and Collaborative Learning”

Instruction

- This Coding Day is designed as a consolidation exercise for Week 2. Students/teams are required to first run, observe, and gain understanding of the provided experiments, and then integrate the knowledge gained into a single embedded application specified in this brief.
- Step 1: Run and Understand the Week 2 Experiments
  - Before attempting the Coding Day task, each team must study, run, and understand the provided Week 2 experiments, including:
    - GPIO experiment: PA5 configured as output to drive an LED and PC13 configured as input to capture a user button with interrupt handling.
    - Timer experiment: TIM4_CH1 configured for PWM generation, and TIM3_CH2 configured for Input Capture in loopback to measure the PWM signal frequency with interrupt handling.
    - ADC experiment: Three ADC channels configured to read the 3-gang potentiometer, with the sampled values used to adjust PWM outputs on TIM1_CH4, TIM3_CH1, and TIM3_CH3. This experiment introduces interrupt and DMA handling of multi-channel ADC reading, and External Timer Trigger Output (TRGO) using TIM3, such that ADC sampling is triggered by timer events.
  - Students are expected to understand:
    - how each peripheral is configured,
    - how each peripheral behaves in hardware,
    - how the code supports the expected behaviour,
    - and how debugging tools can be used to validate the system.

Instruction

GPIO Experiment

Objective: Push a button to turn on a LED

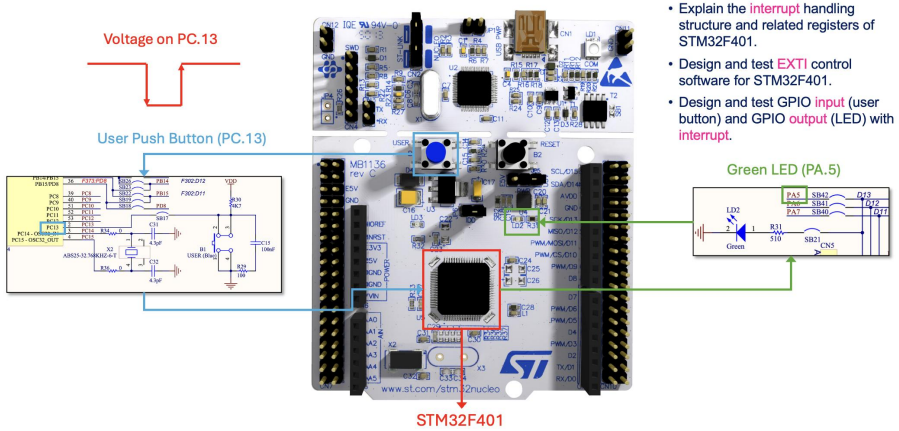

- Explain the interrupt handling structure and related registers of STM32F401.
- Design and test EXTI control software for STM32F401.
- Design and test GPIO input (user button) and GPIO output (LED) with interrupt.

Timer Experiment

Objective 2: Configure TIM3_CH2 (PA7) to capture input PWM signal and compute its frequency and duty cycle

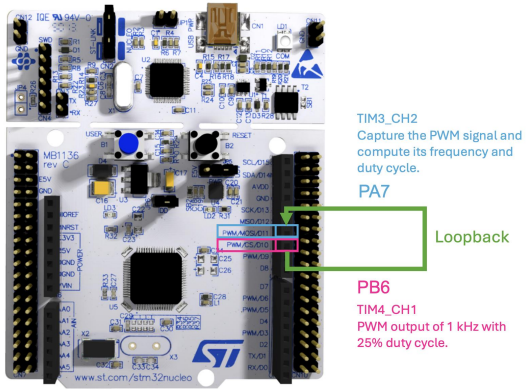

ADC Experiment

ADC with DMA (multichannel + PWM output)

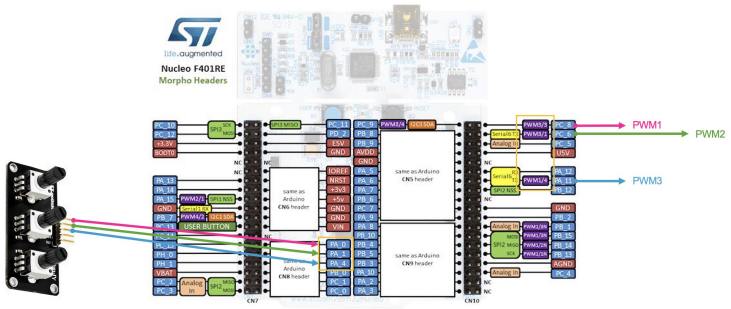

ADC with TRGO: User code

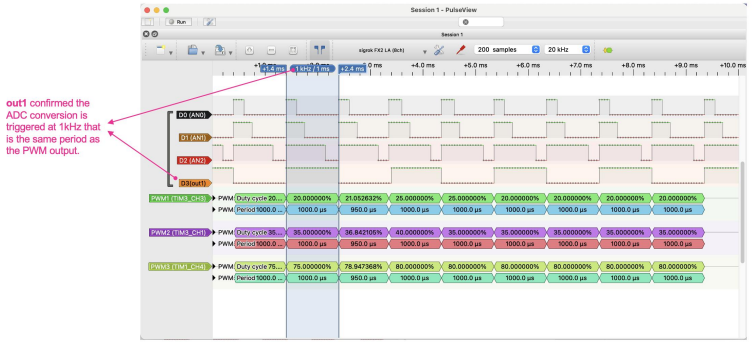

STM32CubeMonitor

Advanced Debugging Experiment

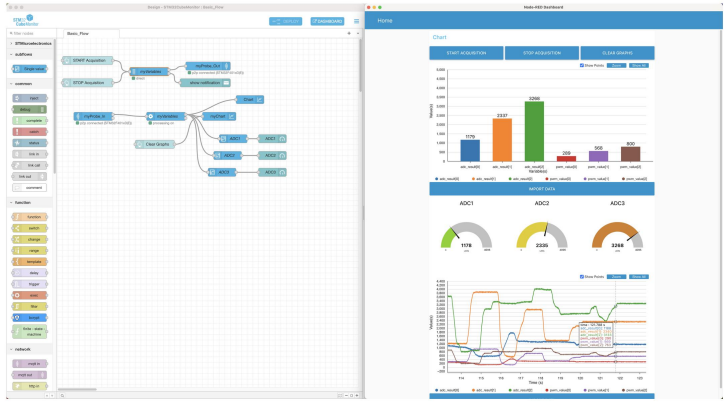

Instruction

- Step 2: Integrate the Knowledge into the Coding Day Task
  - Using the knowledge gained from the experiments, each team must develop an integrated embedded application that mimics a simple motor control system, with following behaviour:
    - 3 buttons are used to select Forward, Left Turn, or Right Turn
    - 3 ADC channels are used to set the corresponding speed values of PWM outputs
    - PWM outputs are used to represent the control of 2 DC motors
    - Input Capture is used to measure the feedback pulse frequency, using loopback from the PWM output to the timer Input Capture, representing motor speed
    - Use suitable debugging and validation techniques are used to confirm correct system operation
- Mark Qualification
  - Team must successfully demonstrate the integrated application
  - The work must show understanding and integration of the Week 2 experiments
  - Each member must explain their contribution clearly to qualify for the individual mark

End of Week2