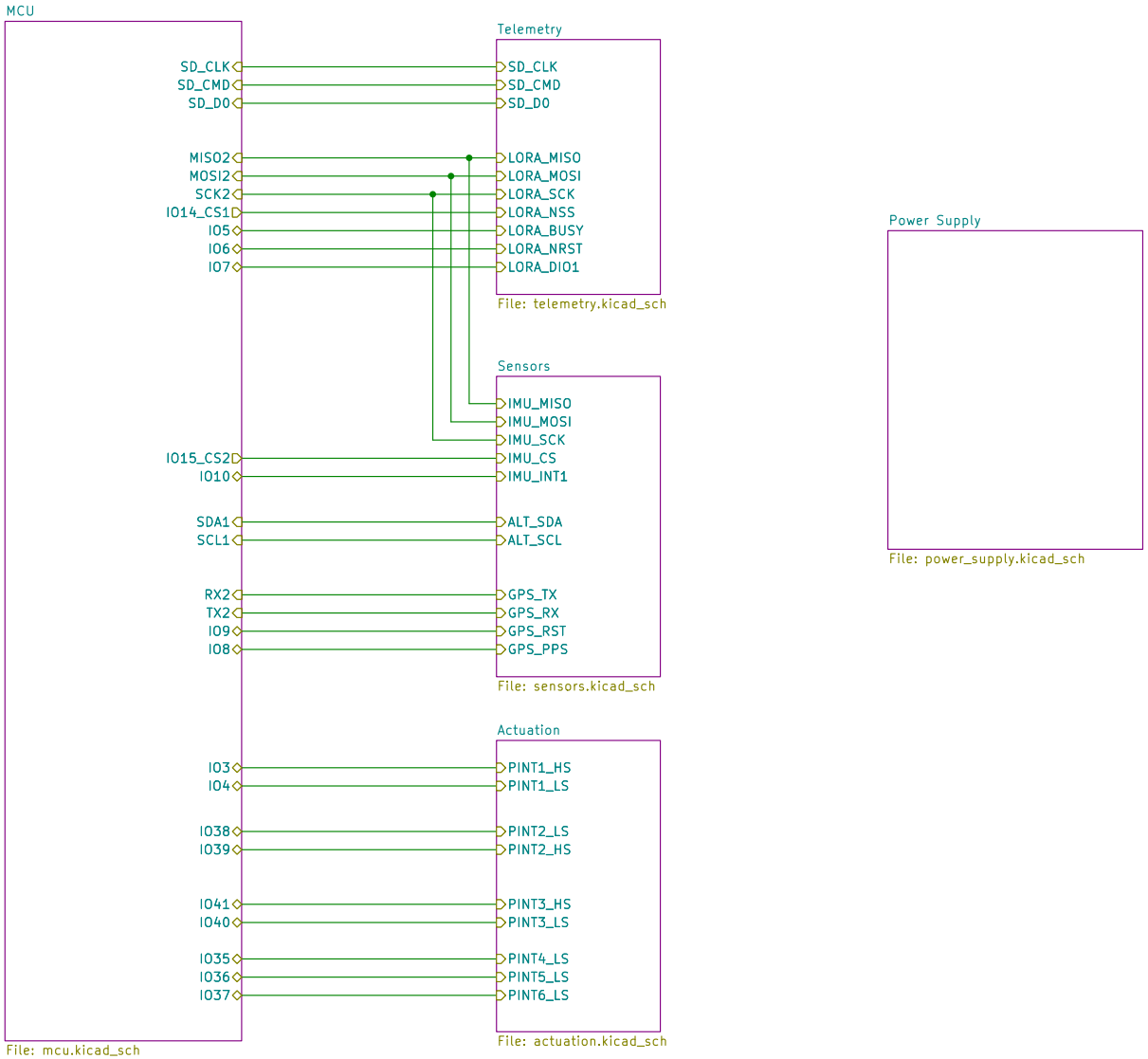

Sheet: /
File: flight_computer_starpi_v1.5.kicad_sch

Title:

Size: A4	Date:	**Rev:**
KiCad E.D.A. 10.0.0		Id: 1/6

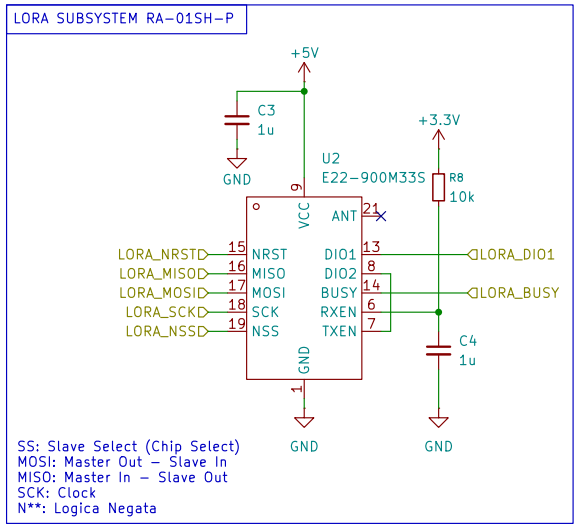

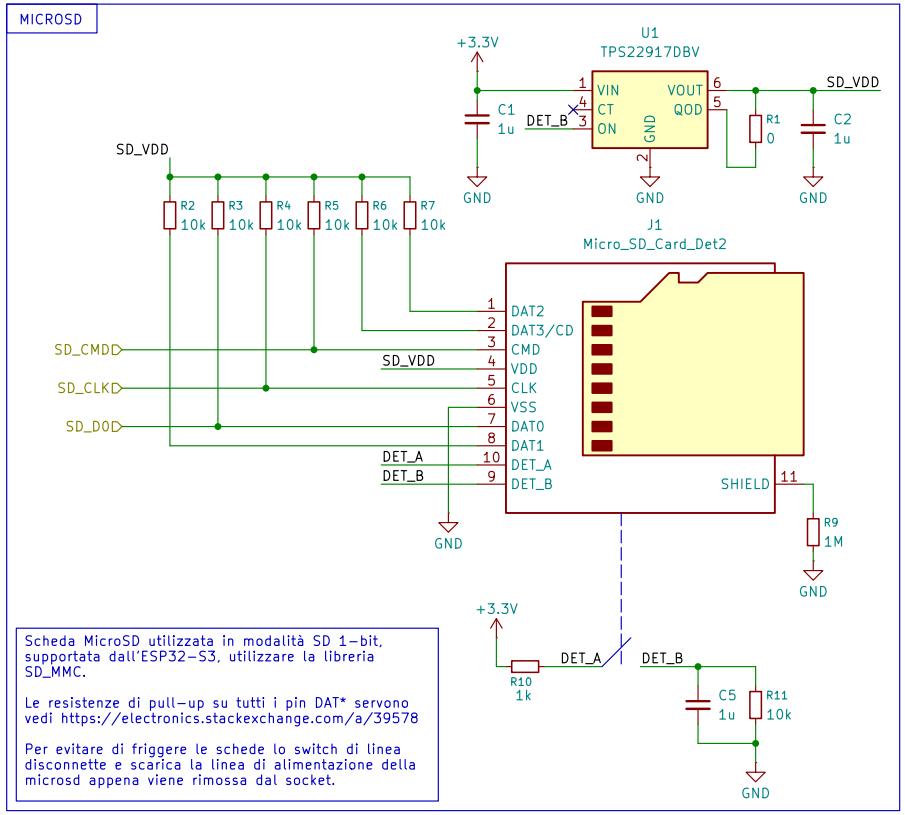

Sheet: /Telemetry/
File: telemetry.kicad_sch

Title:

Size: A4	Date:	**Rev:**
KiCad E.D.A. 10.0.0		Id: 2/6

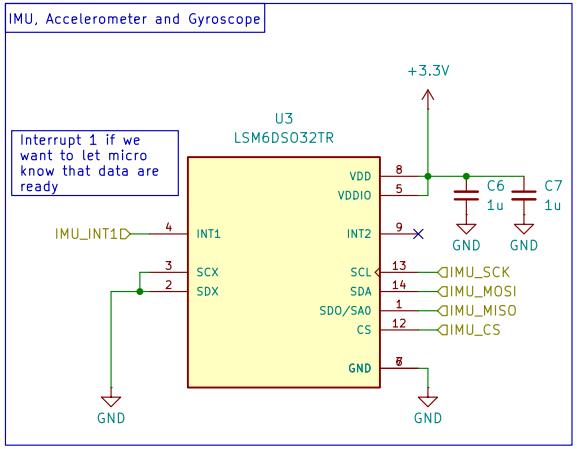

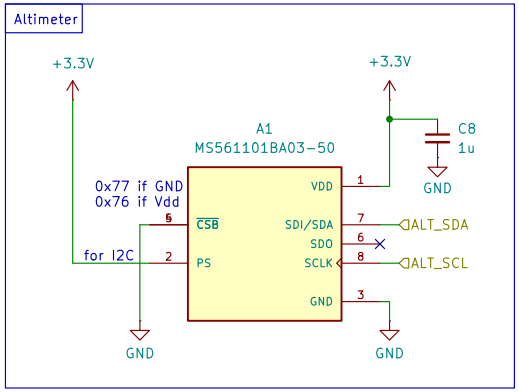

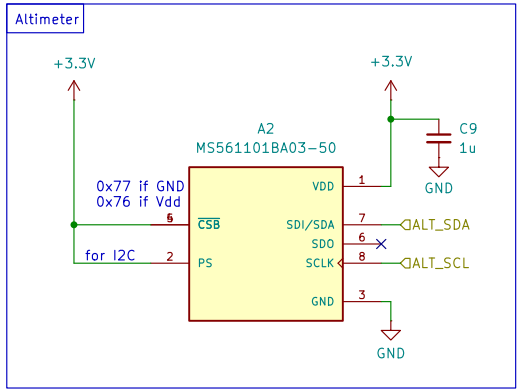

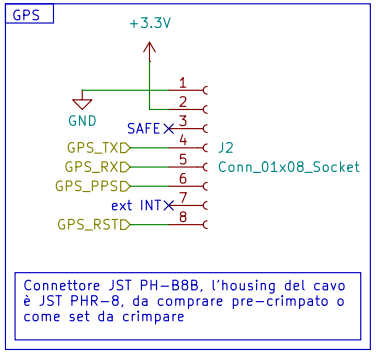

Sheet: /Sensors/
File: sensors.kicad_sch

Title:

Size: A4	Date:	**Rev:**
KiCad E.D.A. 10.0.0		Id: 3/6

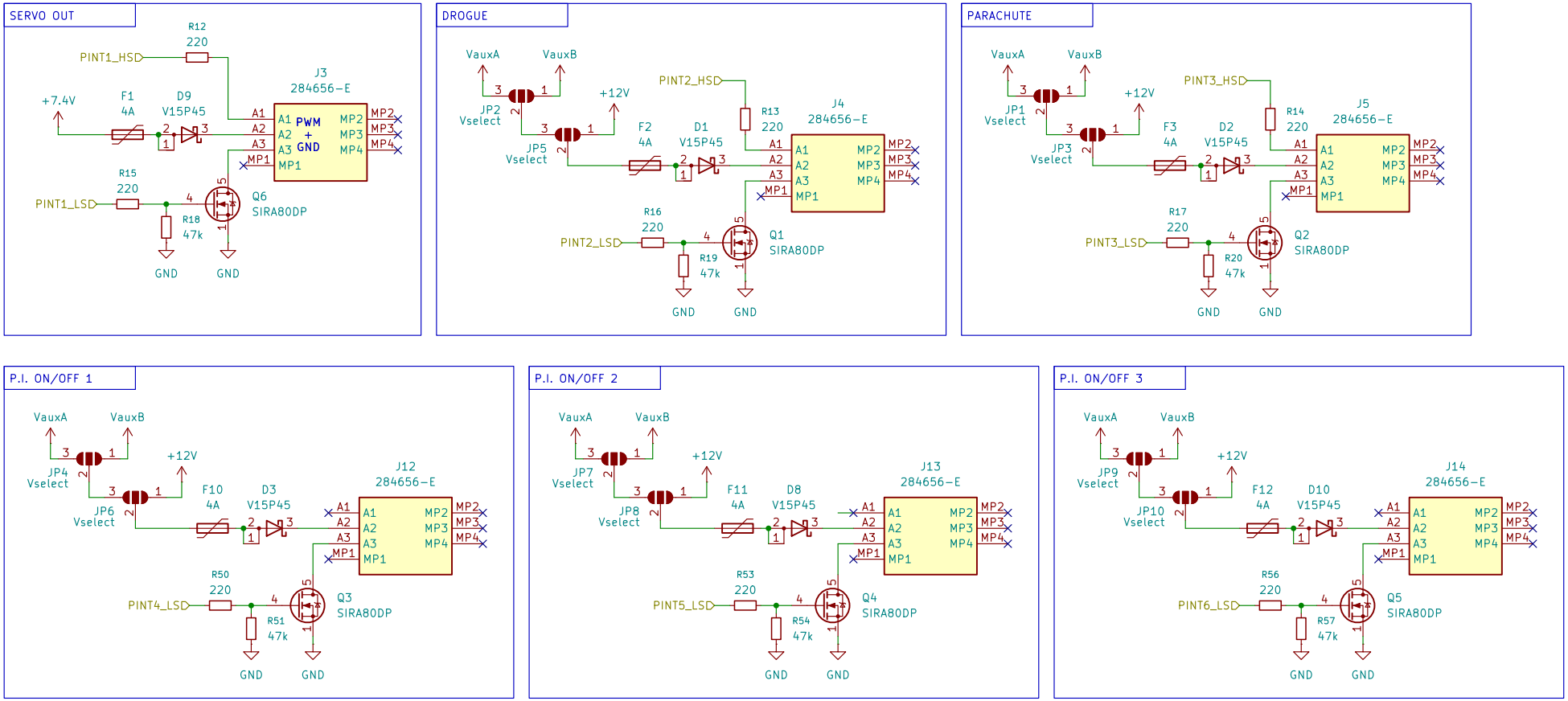

StarPi

Sheet: /Actuation/

File: actuation.kicad_sch

Title: Modulo Attuazione

Size: A4	Date: 2025-11-28	**Rev:**
KiCad E.D.A. 10.0.0		Id: 4/6

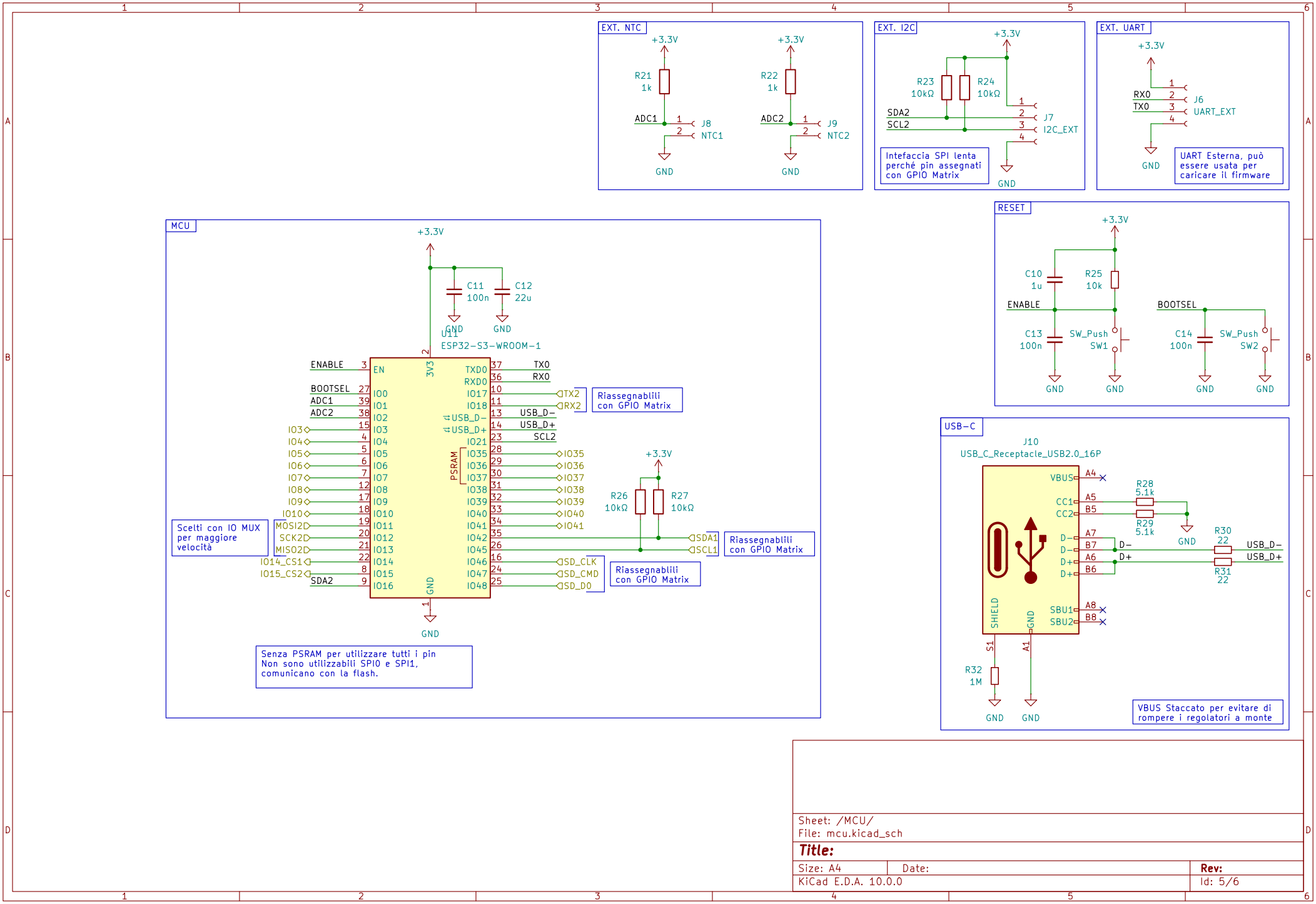

Sheet: /MCU/
File: mcu.kicad_sch

Title:

Size: A4	Date:	Rev:
KiCad E.D.A. 10.0.0		Id: 5/6

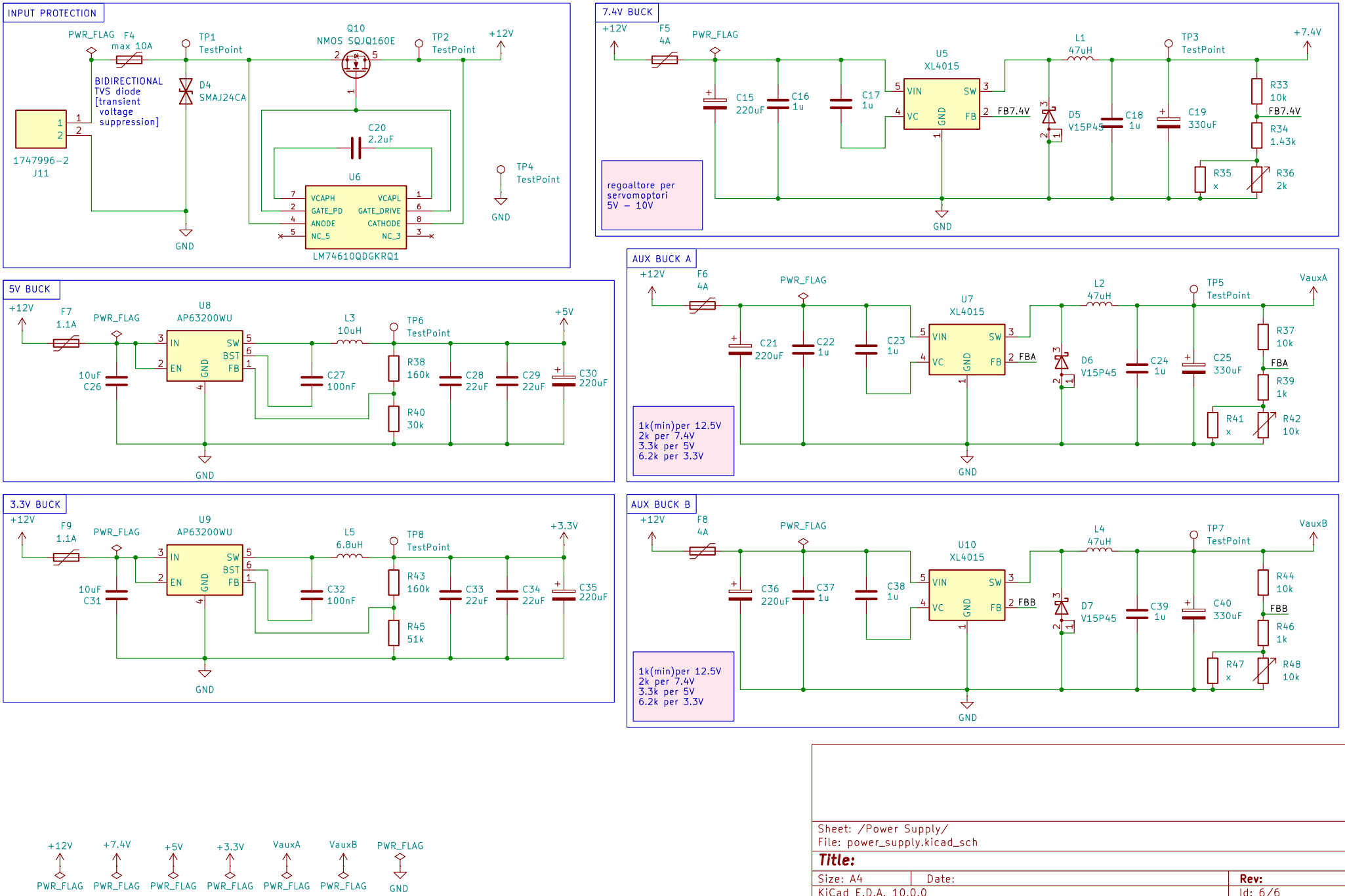

Sheet: /Power Supply/
File: power_supply.kicad_sch

Title:

Size: A4	Date:	Rev:
KiCad E.D.A. 10.0.0		Id: 6/6