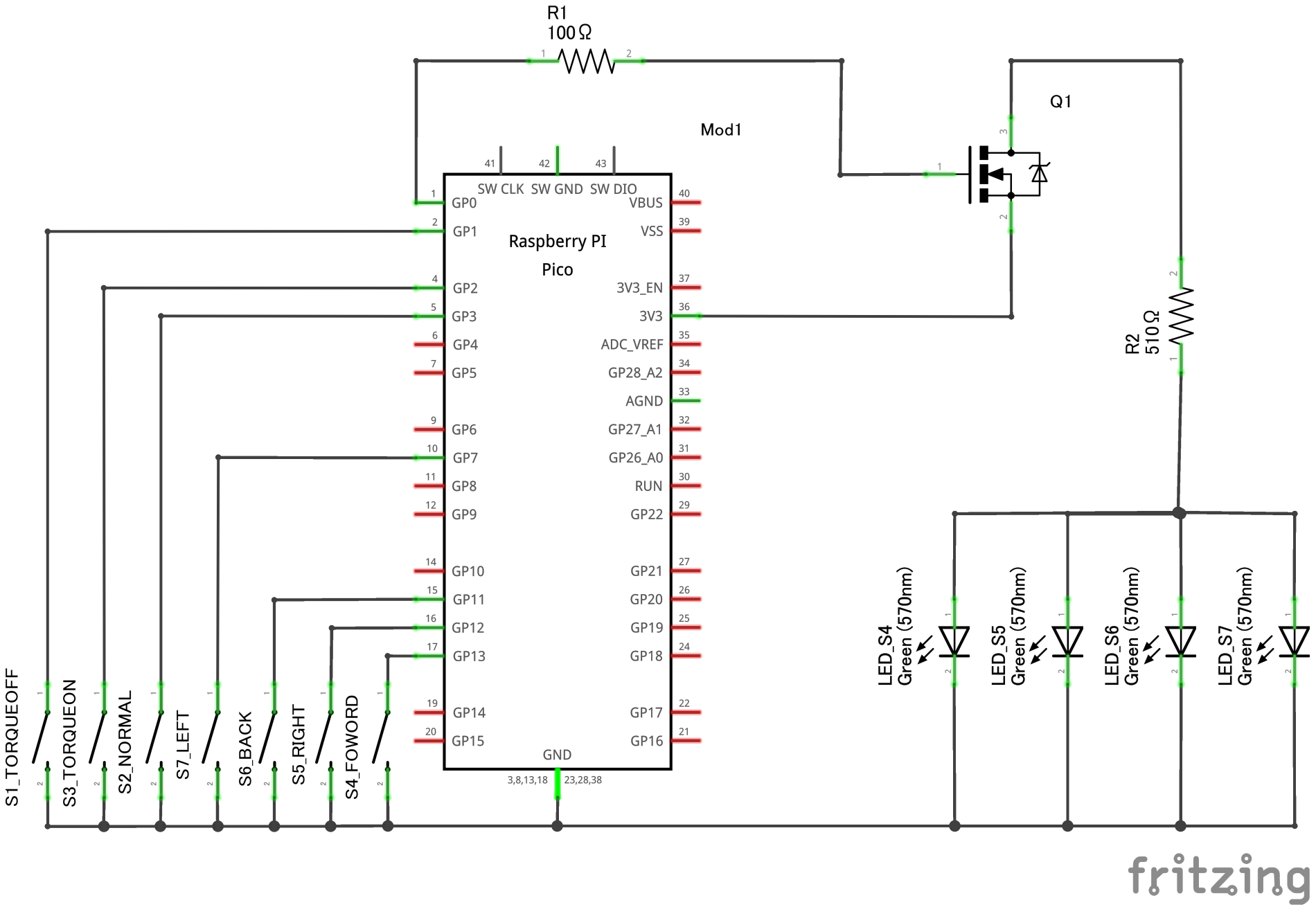
R1
100 Ω
Mod1
Q1
Raspberry PI
Pico
SW CLK
SW GND
SW DIO
GP0
GP1
GP2
GP3
GP4
GP5
GP6
GP7
GP8
GP9
GP10
GP11
GP12
GP13
GP14
GP15
VBUS
VSS
3V3_EN
3V3
ADC_VREF
GP28_A2
AGND
GP27_A1
GP26_A0
RUN
GP22
GP21
GP20
GP19
GP18
GP17
GP16
GND
3,8,13,18
23,28,38
R2
510 Ω
LED_S4
Green (570nm)
LED_S5
Green (570nm)
LED_S6
Green (570nm)
LED_S7
Green (570nm)
S1_TORQUEOFF
S3_TORQUEON
S2_NORMAL
S7_LEFT
S6_BACK
S5_RIGHT
S4_FOWORD
fritzing