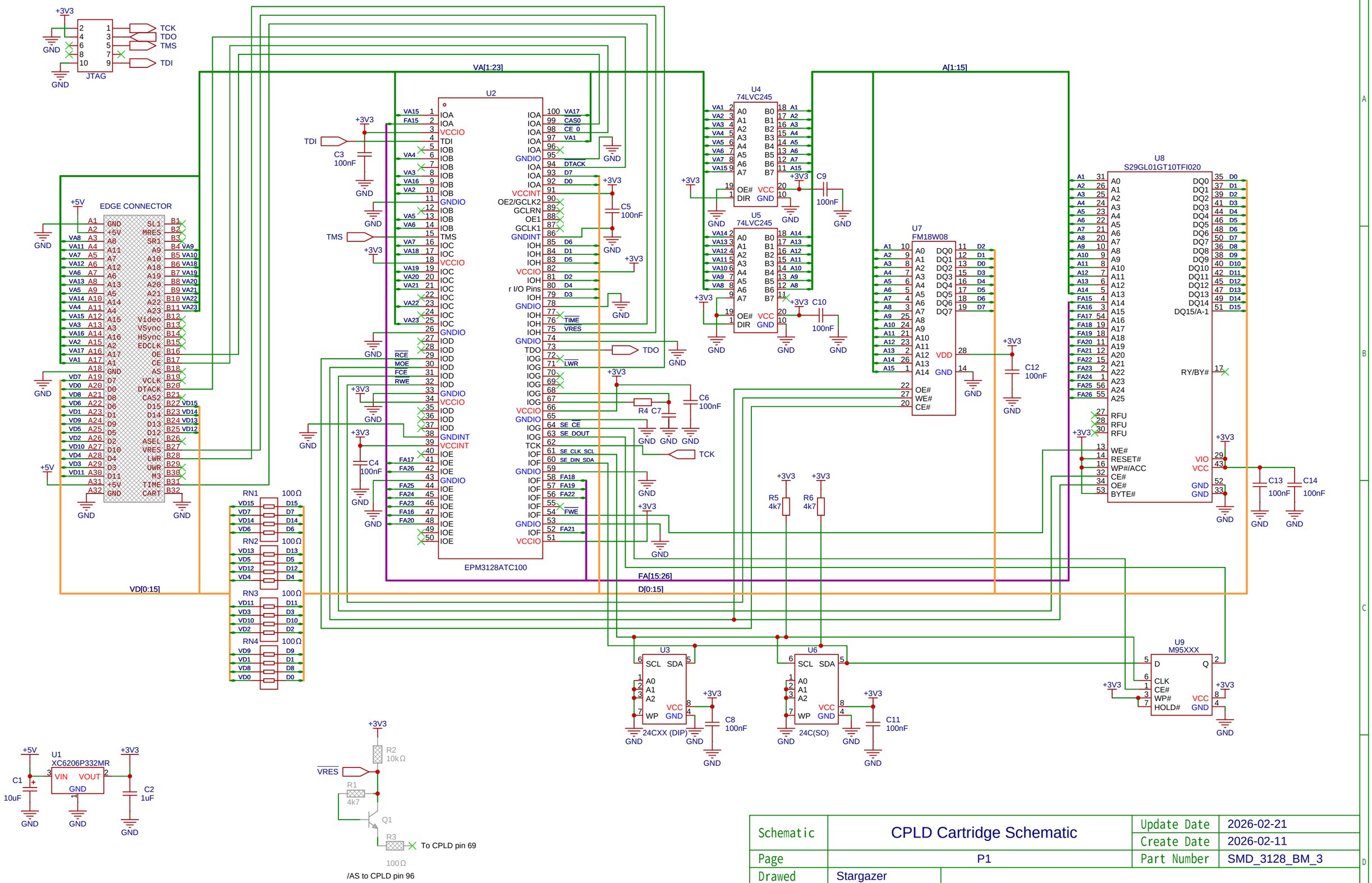

Schematic	CPLD Cartridge Schematic	Update Date	2026-02-21
		Create Date	2026-02-11
Page	P1	Part Number	SMD_3128_BM_3
Drawed	Stargazer	Flash Genesis/MD/32X Reproduction Cartridge	
Reviewed			
		VER	SIZE	PAGE 1 OF 1
EasyEDA		R0	A3	EasyEDA.com