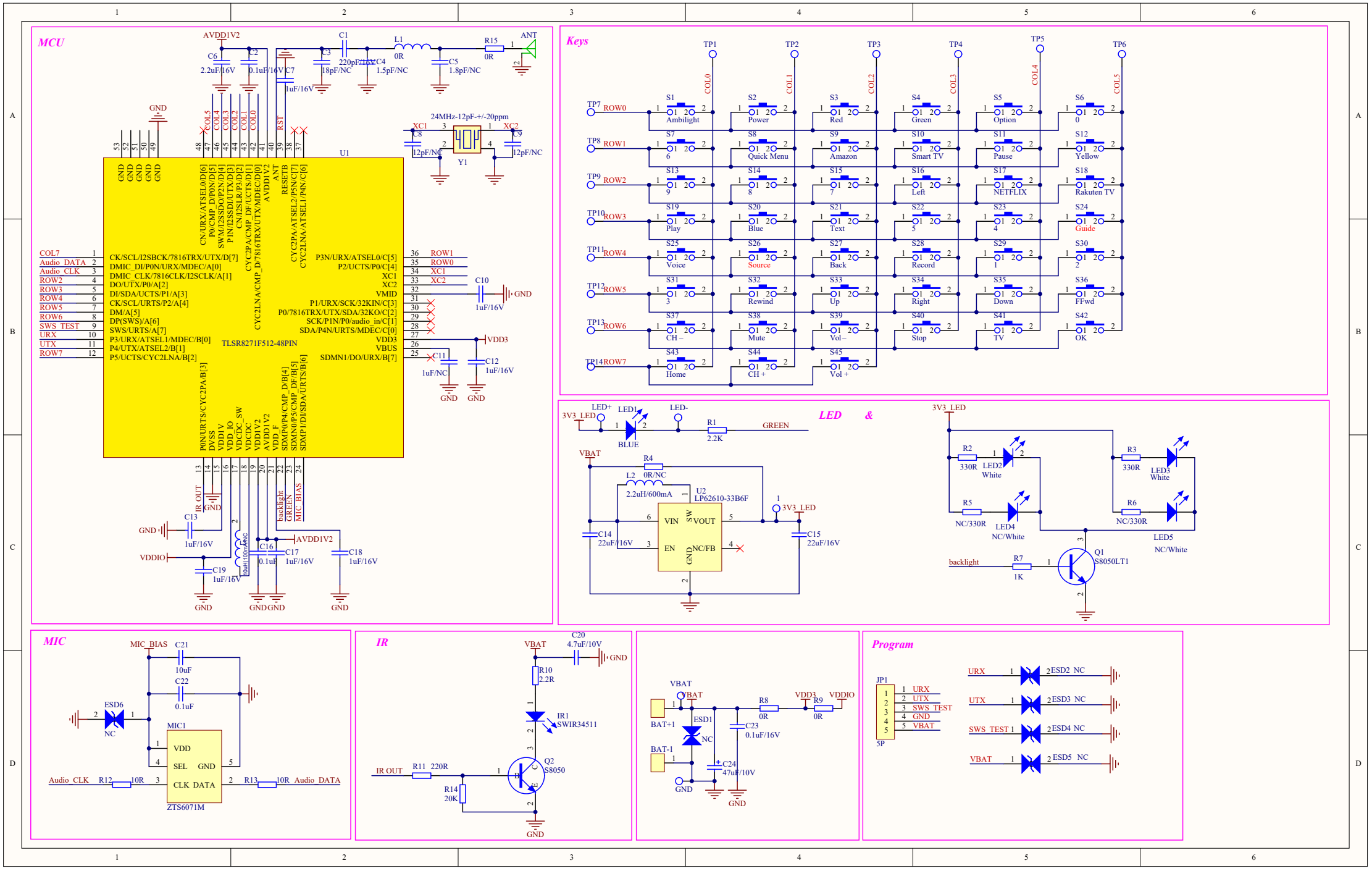
MCU
AVDD1V2
C6 2.2uF/16V
C2 0.1uF/16V
C7 1uF/16V
C3 18pF/NC
C1 220pF/NC
C4 1.5pF/NC
L1 0R
C5 1.8pF/NC
R15 0R
ANT
GND
24MHz-12pF-+/-20ppm
XC1
XC2
C8 12pF/NC
C9 12pF/NC
Y1
U1
TLSR8271F512-48PIN
COL7
Audio_DATA
Audio_CLK
ROW2
ROW3
ROW4
ROW5
ROW6
SWS_TEST
URX
UTX
ROW7
ROW1
ROW0
XC1
XC2
C10 1uF/16V
VDD3
C11 1uF/NC
C12 1uF/16V
IR OUT
backlight
GREEN
MIC_BIAS
C13 1uF/16V
VDDIO
C19 1uF/16V
C16 0.1uF
C17 1uF/16V
C18 1uF/16V
Keys
TP1
TP2
TP3
TP4
TP5
TP6
TP7 ROW0
TP8 ROW1
TP9 ROW2
TP10 ROW3
TP11 ROW4
TP12 ROW5
TP13 ROW6
TP14 ROW7
COL0
COL1
COL2
COL3
COL4
COL5
S1 Ambilight
S2 Power
S3 Red
S4 Green
S5 Option
S6 0
S7 6
S8 Quick Menu
S9 Amazon
S10 Smart TV
S11 Pause
S12 Yellow
S13 9
S14 8
S15 7
S16 Left
S17 NETFLIX
S18 Rakuten TV
S19 Play
S20 Blue
S21 Text
S22 5
S23 4
S24 Guide
S25 Voice
S26 Source
S27 Back
S28 Record
S29 1
S30 2
S31 3
S32 Rewind
S33 Up
S34 Right
S35 Down
S36 FFwd
S37 CH –
S38 Mute
S39 Vol –
S40 Stop
S41 TV
S42 OK
S43 Home
S44 CH +
S45 Vol +
LED &
3V3_LED
LED+
LED1
LED-
BLUE
R1 2.2K
GREEN
VBAT
R4
L2 0R/NC
2.2uH/600mA
U2 LP62610-33B6F
VIN
VOUT
EN
NC/FB
SW
GND
C14 22uF/16V
C15 22uF/16V
R2 330R
LED2 White
R3 330R
LED3 White
R5 NC/330R
LED4 NC/White
R6 NC/330R
LED5 NC/White
Q1 S8050LT1
R7 1K
MIC
MIC_BIAS
C21 10uF
C22 0.1uF
ESD6 NC
MIC1
VDD
SEL
GND
CLK
DATA
ZTS6071M
R12 10R
R13 10R
IR
C20 4.7uF/10V
R10 2.2R
IR1 SWIR34511
Q2 S8050
R11 220R
R14 20K
BAT+1
BAT-1
ESD1 NC
C23 0.1uF/16V
C24 47uF/10V
R8 0R
R9 0R
VDD3
VDDIO
Program
JP1
5P
URX
UTX
SWS_TEST
GND
VBAT
ESD2 NC
ESD3 NC
ESD4 NC
ESD5 NC