REV.	ECN NO.	DR	DATE
00	NEW	LIYIJIE	2019-10-30

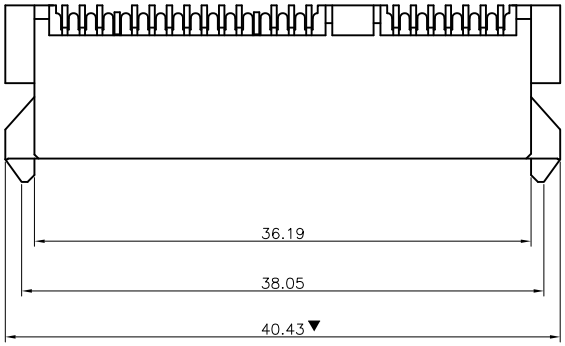

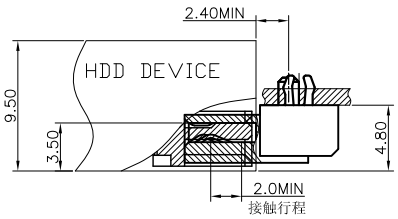

MATING DWG

NOTE:

1. MATERIAL:
   HOUSING: LCP WITH 30% GF, UL 94V-0, BLACK COLOR.
   CONTACTS: PHOSPHOR BRONZE.
   BOARDLOCKS: BRASS.

2. FINISH:
   CONTACTS: GOLD FALSH PLATED ON CONTACT AREA, [100μ"] MIN..
   BRIGHT-TIN ON SOLDER TAIL, WITH ENTIRE CONTACT
   UNDERPLATED [50μ"] MIN.. NICKEL.
   BOARDLOCKS: [100μ"] MIN. BRIGHT-TIN OVER[50μ"] MIN.
   NICKEL ON ENTIRE BOARDLOCK.

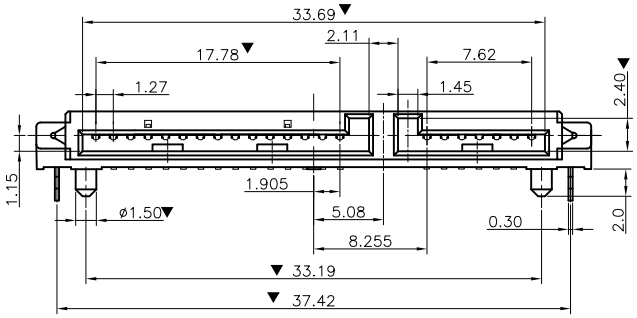

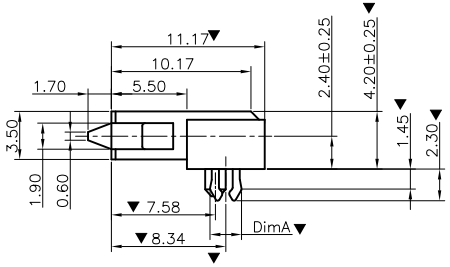

5. PART NUMBER DESCRIPTION :

R SF-C300- X 22 XX X-X XX

- Housing Color: B-Black, L-Blue
- Plating: L1-[1μ"]Gold contact area [100μ"]tin solder area; L2-[5μ"]Gold contact area [100μ"]tin solder area
- Remark: See Table A
- Housing Material: L-LCP
- Packing: T-TRAY

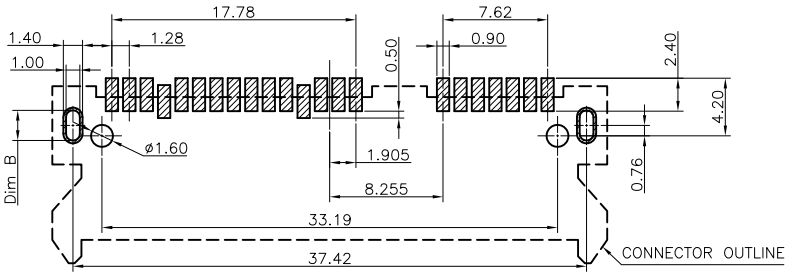

TOLERANCE: ±0.05
RECOMMENDED PCB LAYOUT
(TOP VIEW)

Table A

PART NO.	DIM B (P C BOARD)	DIM A (CONNECTOR)	ITEM
RSF-C300-B22L1T-L01	2.08	2.30	01

TOLERANCE UNLESS OTHERWISE SPECIFIED		THIRD ANGLE PROJECTION
LINER	ANGLES	DRAWING BY & DATE: LIYIJIE 2019-10-30
.0 ± 0.25	0. ± 2°	CHECKED BY & DATE
.00 ± 0.15	.0 ± 1°	APPROVED BY & DATE
.000 ± 0.10	.00 ± .5°	PRODUCT FAMILY: SATA HDD FEMALE

DWG NO.: SF-C300-00
PART NO.: RSF-C300-X22L1T-L01

TITLE: SATA 7+15P SMT H=4.2mm 板上SMT 2.08孔鱼叉,无凸

SIZE	UNIT	SCALE	SHEET	REV.
A4	MM	1 : 1	1 OF 1	1