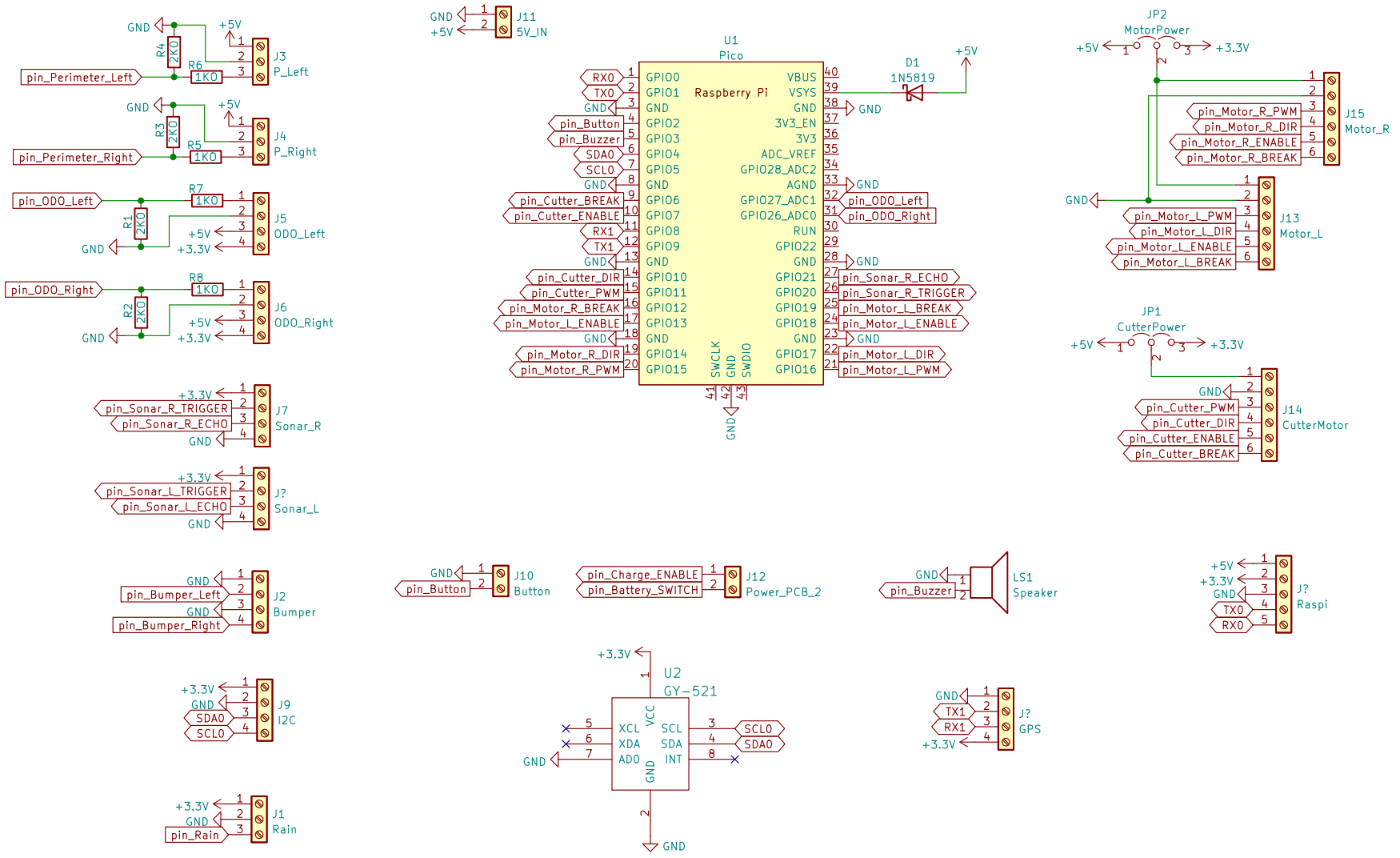

S. Dippel

Sheet: /
File: Pi_Pico_Mower.kicad_sch

Title: Raspberry Pi Pico Mower PCB

Size: A4	Date: 2023-09-01	**Rev: 1.0**
KiCad E.D.A. kicad (6.0.5)		Id: 1/1