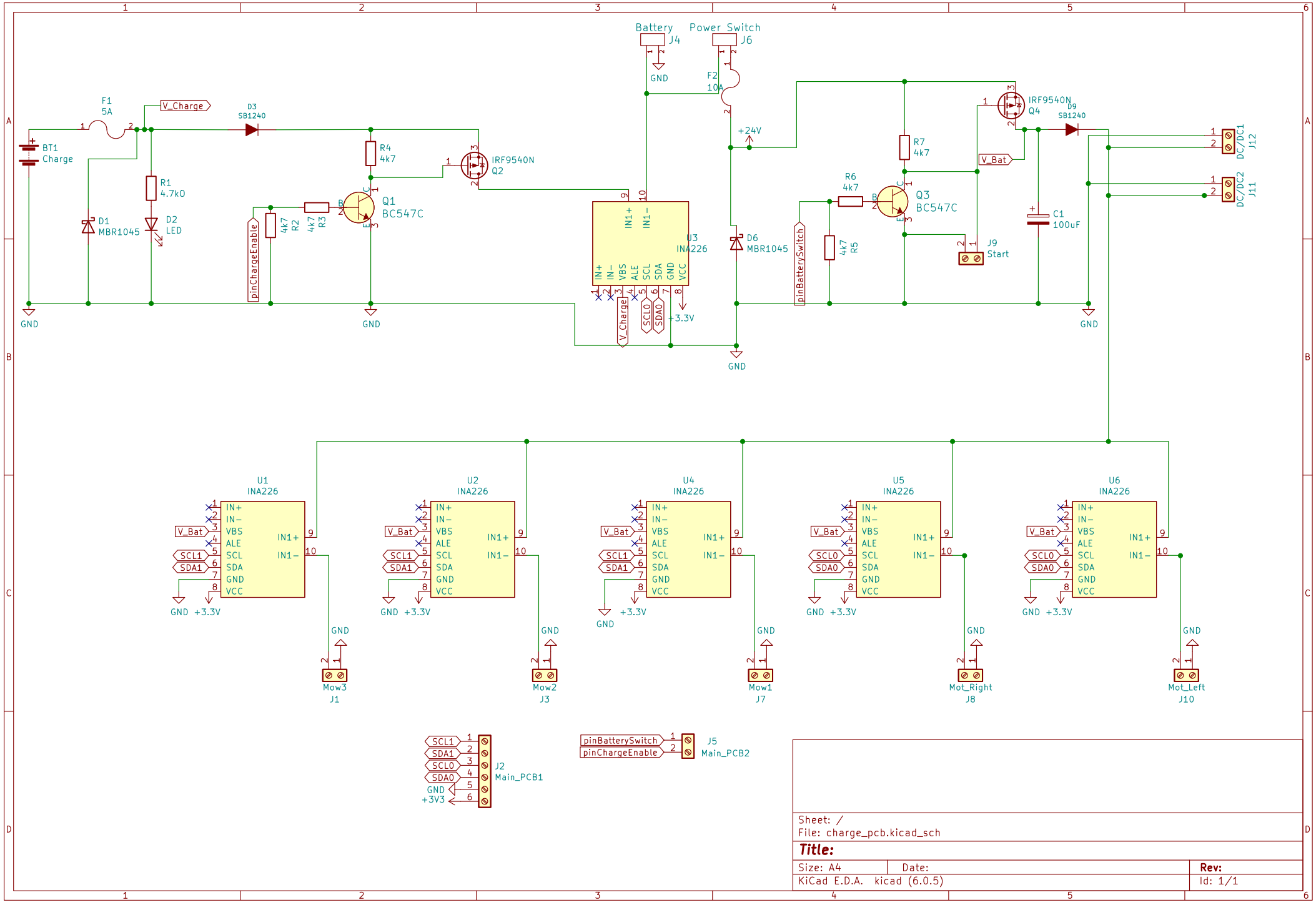
Battery
J4
Power Switch
J6
GND
F2
10A
F1
5A
V_Charge
D3
SB1240
BT1
Charge
R1
4.7k0
D1
MBR1045
D2
LED
R4
4k7
IRF9540N
Q2
Q1
BC547C
4k7
R2
4k7
R3
pinChargeEnable
U3
INA226
IN1+
IN1−
IN+
IN−
VBS
ALE
SCL
SDA
GND
VCC
SCL0
SDA0
+3.3V
+24V
D6
MBR1045
pinBatterySwitch
R6
4k7
4k7
R5
R7
4k7
Q3
BC547C
IRF9540N
Q4
D9
SB1240
V_Bat
J9
Start
C1
100uF
DC/DC1
J12
DC/DC2
J11
U1
INA226
U2
INA226
U4
INA226
U5
INA226
U6
INA226
SCL1
SDA1
Mow3
J1
Mow2
J3
Mow1
J7
Mot_Right
J8
Mot_Left
J10
J2
Main_PCB1
J5
Main_PCB2
Sheet: /
File: charge_pcb.kicad_sch
Title:
Size: A4
Date:
Rev:
KiCad E.D.A. kicad (6.0.5)
Id: 1/1